ASSEMBLYINSTRUCTIONS

DEAR CUSTOMER,

Caution:

1. Please read all instructions before assembly and check the carton for any parts that may have come loose during shipment. it is recommended to use two or more persons during the assembly process.
2.Please do not giscard any packaging before you have checked all the parts and fittings are incuded. if for any reason this product needs to be retumed it must be retumedpacked in its original packaging
3. Assemble this produet on a fat and clean surface to avoid scratching.
4.Please don't tighten the screws completely and go back later for afinal tightening of all the screws after

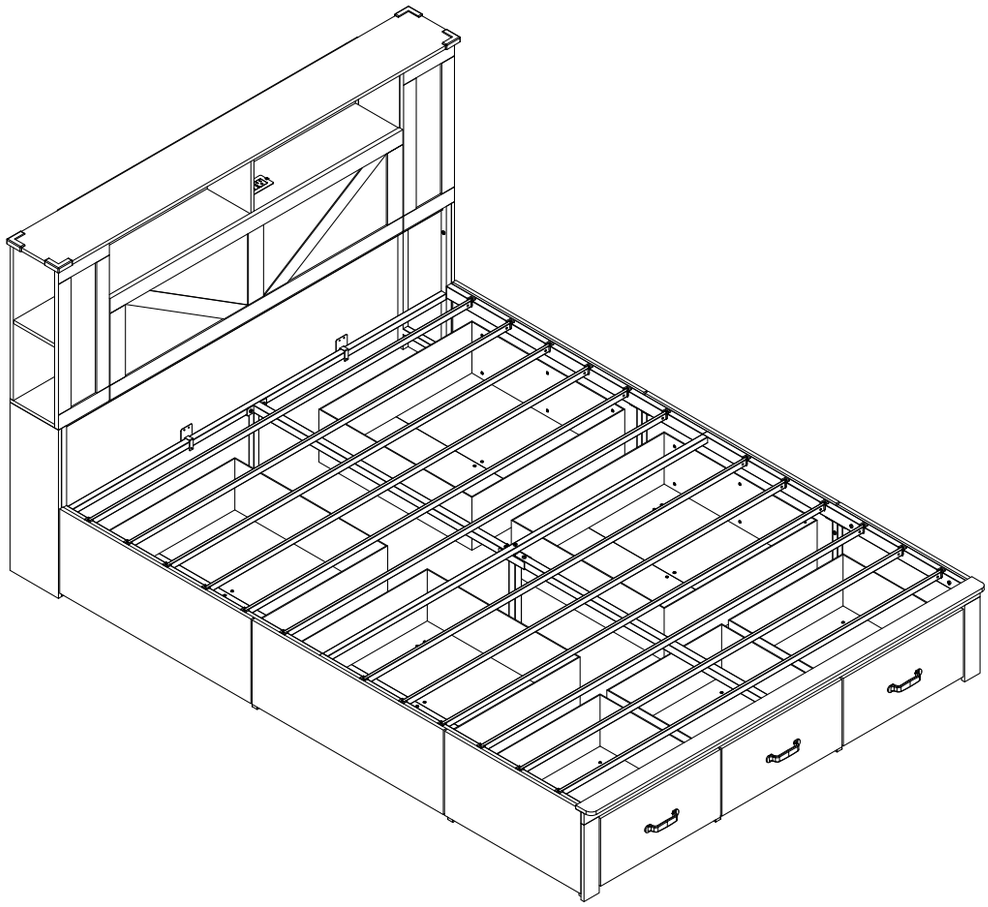

SKU:MSWSC100130301A
SKU:MSWSC100130302A
SKU:MSWSC100130401A
SKU:MSWSC100130402A

Version : 1.0

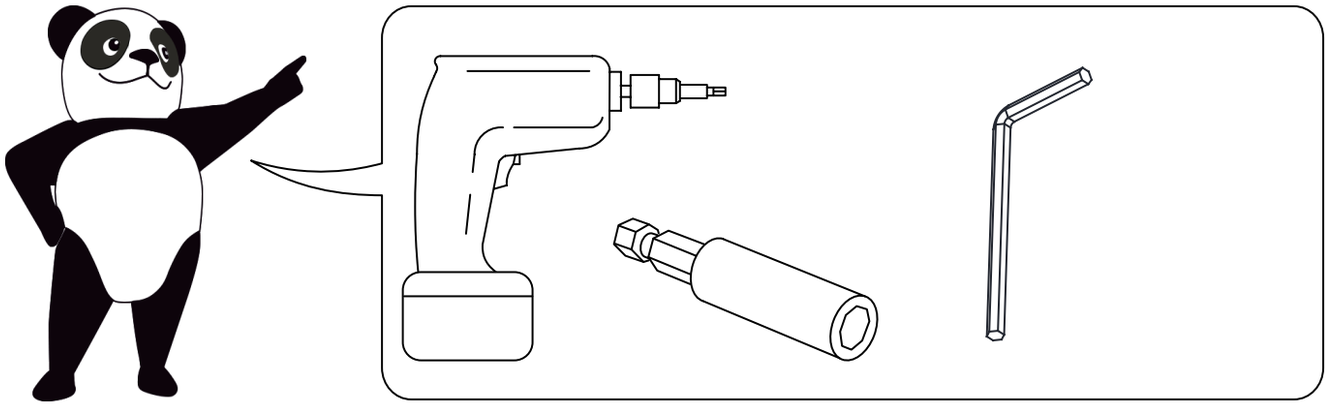

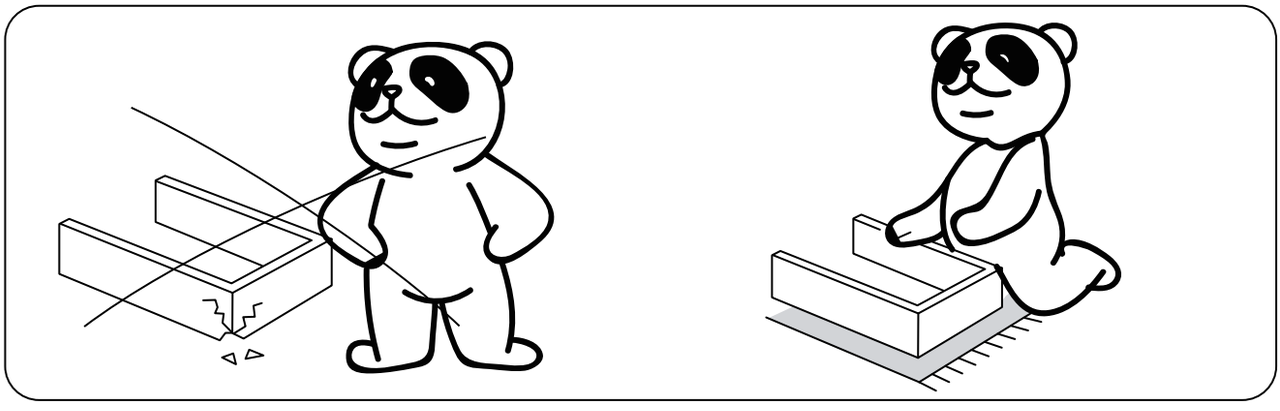

Violent installation is prohibited

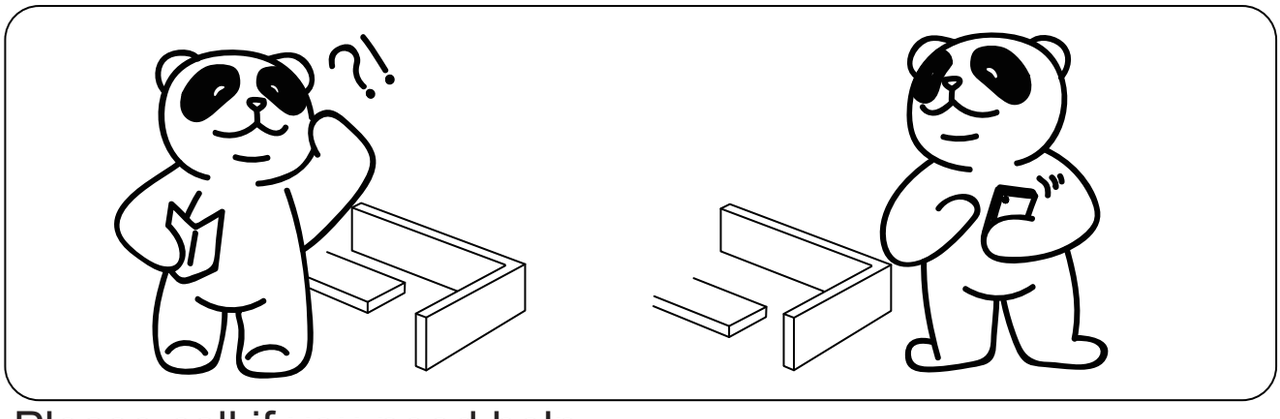

Please call if you need help

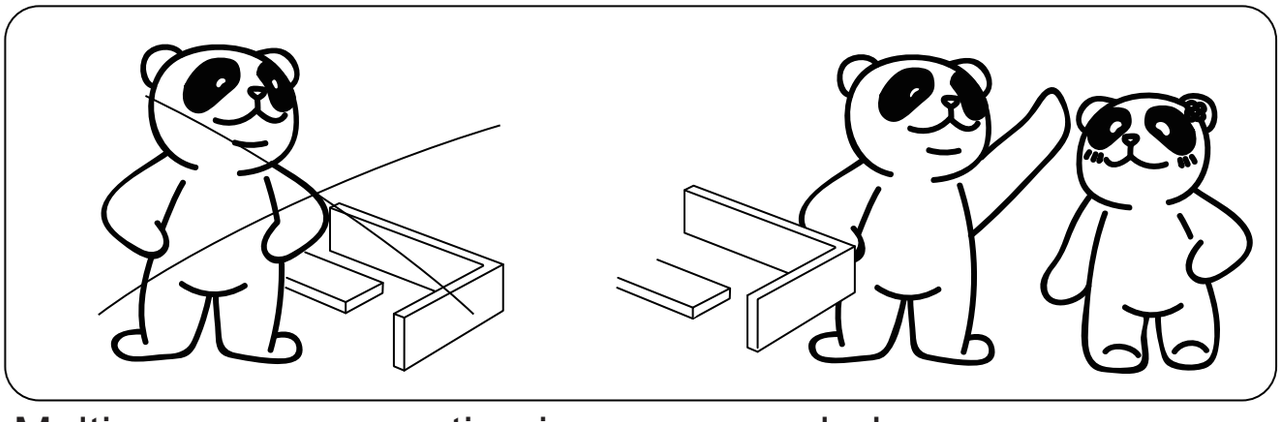

Multi-person cooperation is recommended

1.Installation precautions

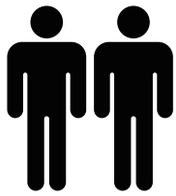

2 PERS.

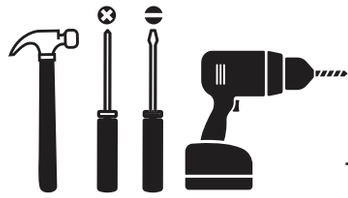

Tools required (not included)

2.Matters needing attention

⚠ WARNING





Children have died from furniture tipover. To reduce the risk of furniture tipover:

- ALWAYS install Anti-tip deviceprovided.
- NEVER put a TV on this product.
- NEVER allow children to stand, climb or hang on drawers, doors, or shelves.
- NEVER open more than one drawer at a time.

Place heaviest items in the lowes drawers.

This is a permanent label. Do not remove!

Cam Lock Fastening System

Insert the cam bolt into the hole first, then insert the cam lock and lock it.

1.

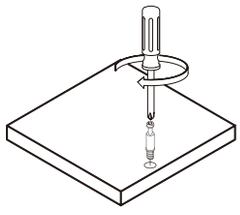

2.

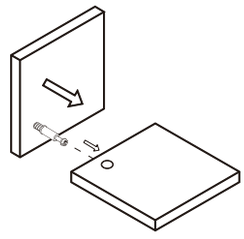

3.

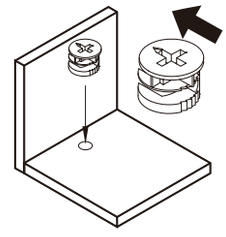

The opening must point toward the edge of the board

4.

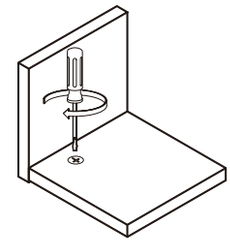

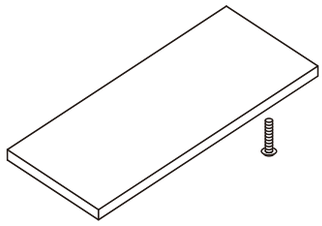

Be sure to use the proper screws to avoid damaging the parts.

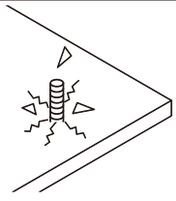

Wrong screws can cause the plank to crack

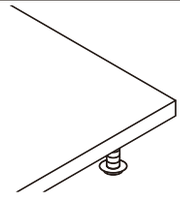

The right screw is the right size

Please check that you have all the parts listed before starting assembly, if you find something missing, please stop the assembly and contact us immediately.

Parts List

Pls make sure all the accesories are complete!

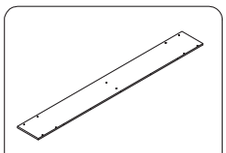	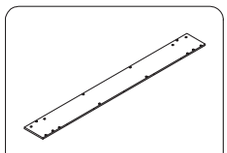	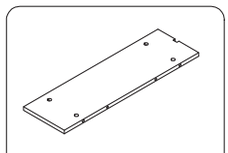	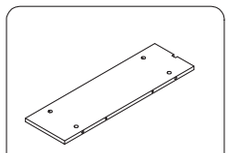	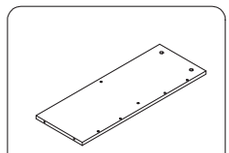
1 1PC	2 1PC	3 1PC	4 1PC	5 1PC
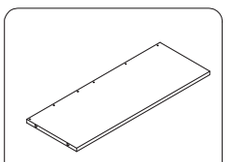	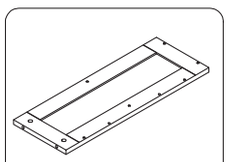	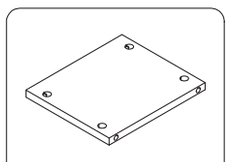	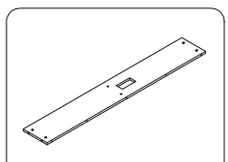	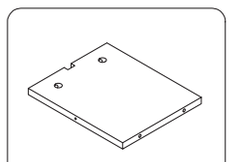
6 1PC	7 1PC	8 2PCS	9 1PC	10 1PC
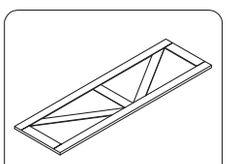	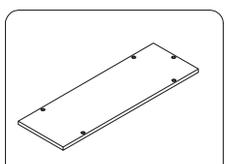	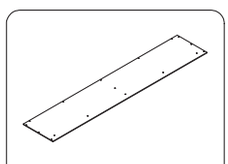	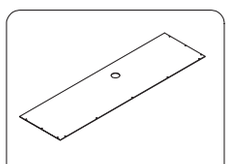	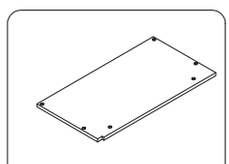
11 1PC	12 2PCS	13 1PC	14 1PC	15 1PC
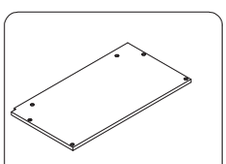	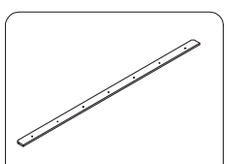	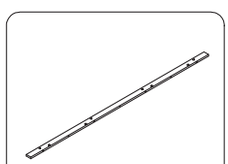	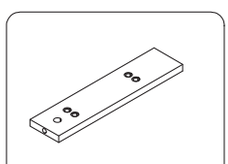	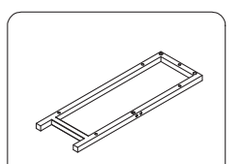
16 1PC	17 1PC	18 1PC	19 2PCS	20 1PC
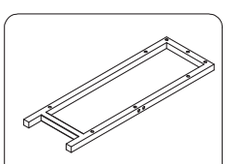	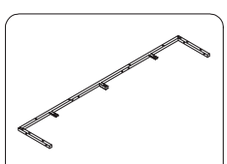	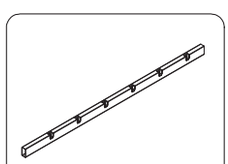	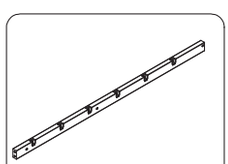	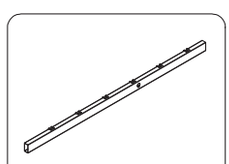
21 1PC	22 1PC	23 1PC	24 1PC	25 1PC
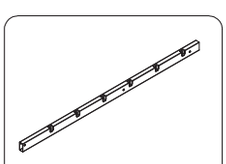	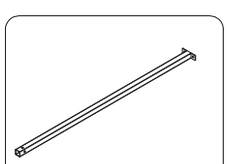	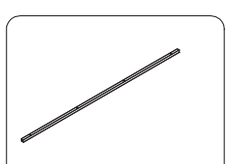	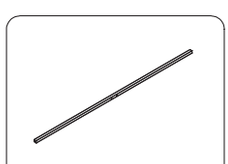	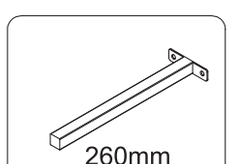
26 1PC	27 2PCS	28 2PCS	29 1PC	260mm 30 2PCS

Parts List

Pls make sure all the accesories are complete!

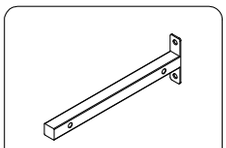

31 2PCS

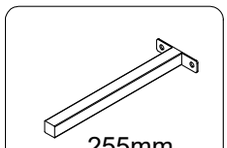

32 1PC

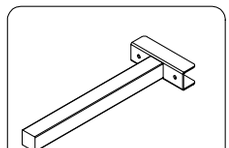

33 1PC

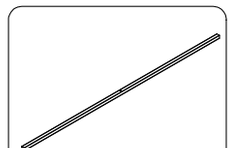

34 1PC

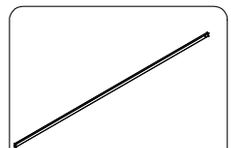

35 12PCS

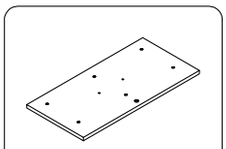

36 3PCS

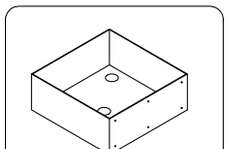

37 3PCS

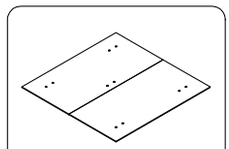

38 3PCS

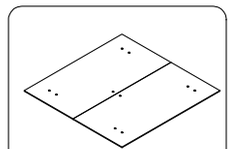

39 3PCS

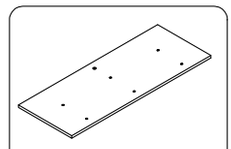

40 4PCS

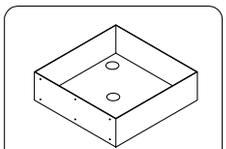

41 4PCS

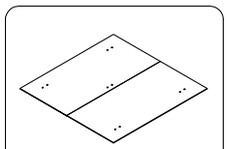

42 4PCS

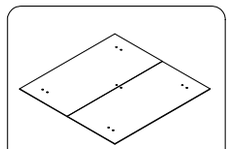

43 4PCS

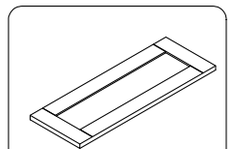

44 1PC

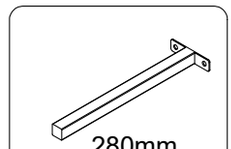

45 2PCS

Parts List

Pls make sure all the accesories are complete!

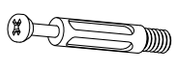 M6*35mm A 40PCS	 Ø12mm B 40PCS	 M6*30mm C 11PCS	 M6.3*40mm D 6PCS	 M6*10mm E 8PCS
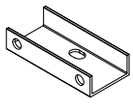 F 2PCS	 M4*12mm G 28PCS	 M3.5*12mm H 2PCS	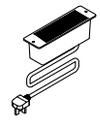 I 1PC	 J 2PCS
 M6*12mm K 22PCS	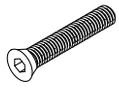 M6*30mm L 2PCS	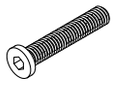 M6*28mm M 48PCS	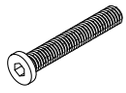 M6*35mm N 6PCS	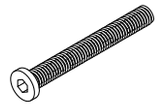 M6*60mm O 1PC
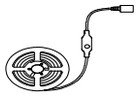 P 1PC	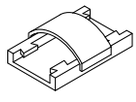 Q 7PCS	 R 18PCS	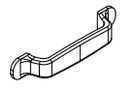 S 3PCS	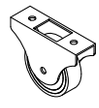 T 35PCS
 M4*10mm U 42PCS	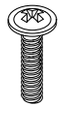 M4*16mm V 70PCS	 M6*12mm W 7PCS	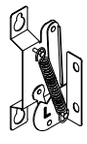 X 1PC	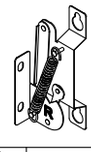 Y 1PC
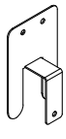 Z 2PCS	 M4*14mm AA 6PCS	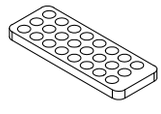 AB 1PC	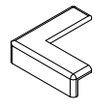 AC 4PCS	 AD 1PC

Assembly Mode

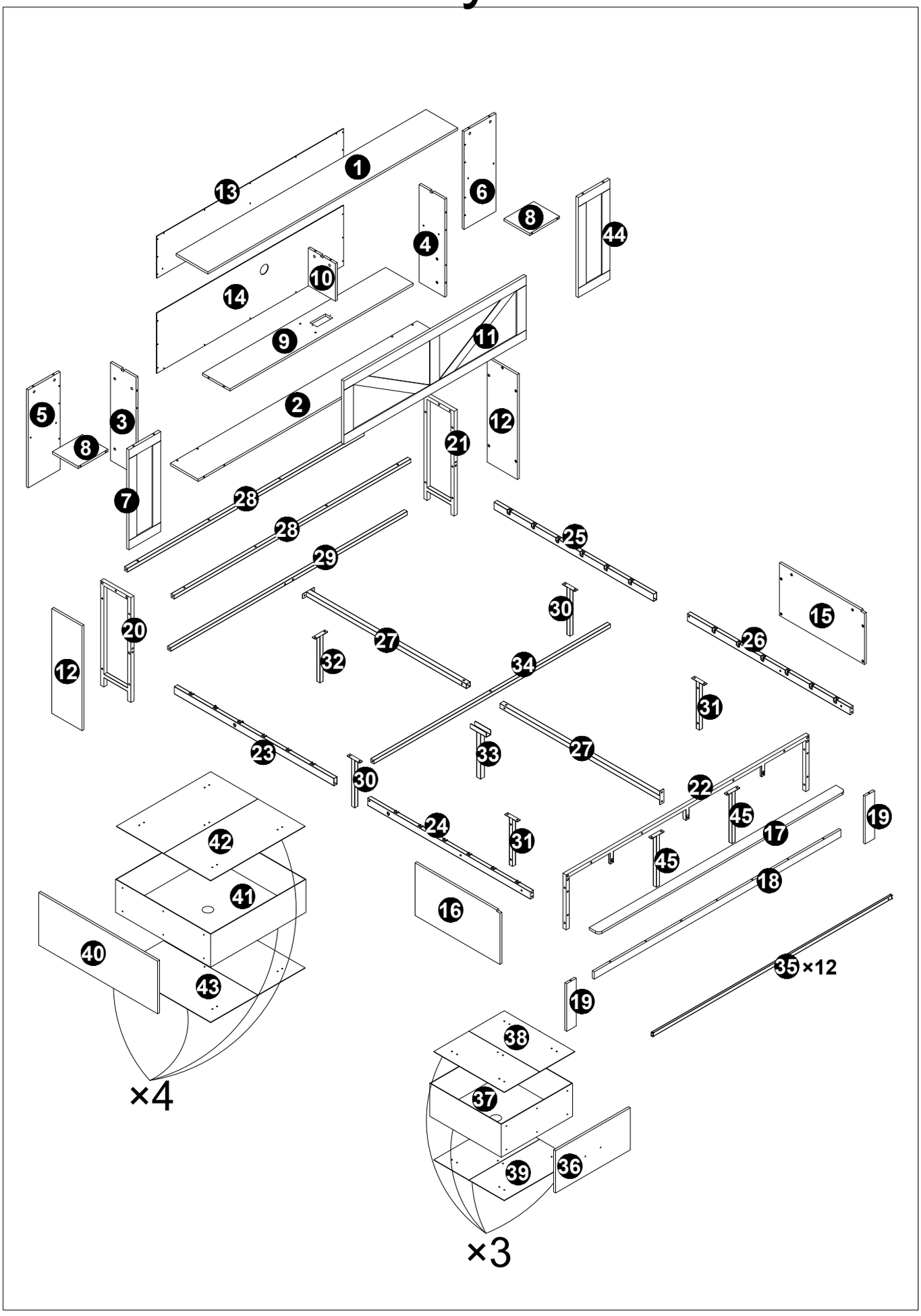

1

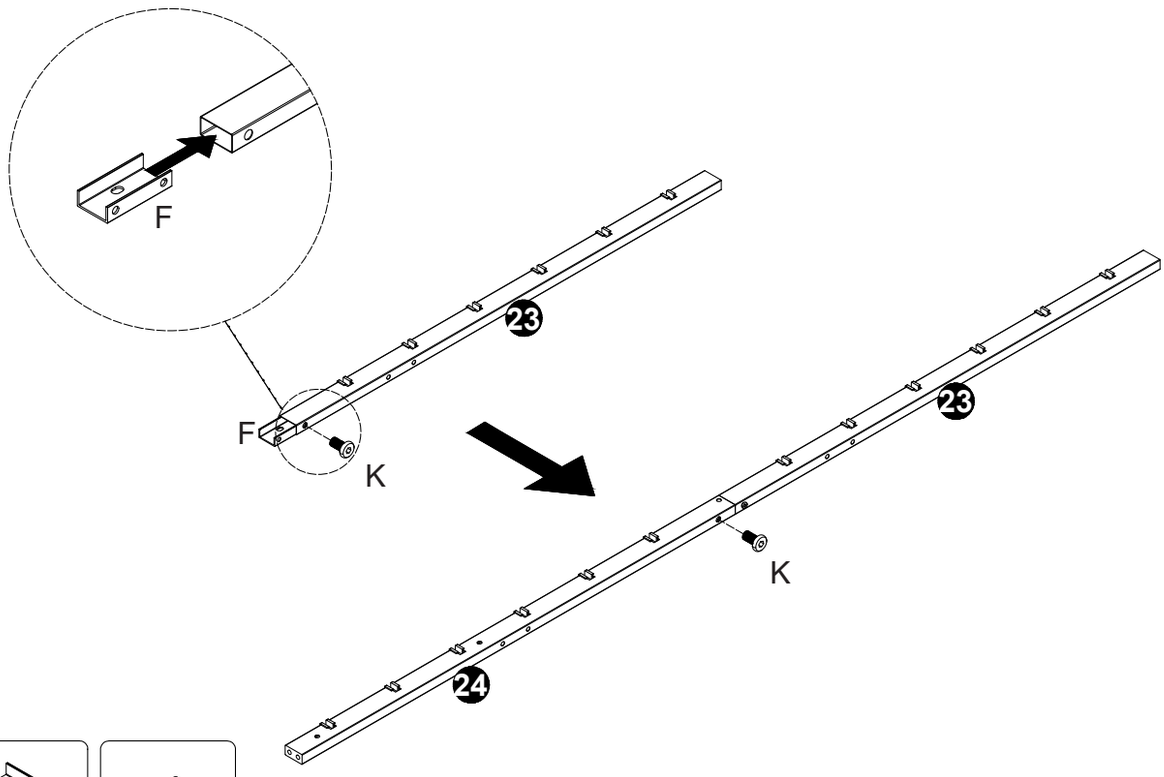

F	1PC

M6*12mm	
K	2PCS

2

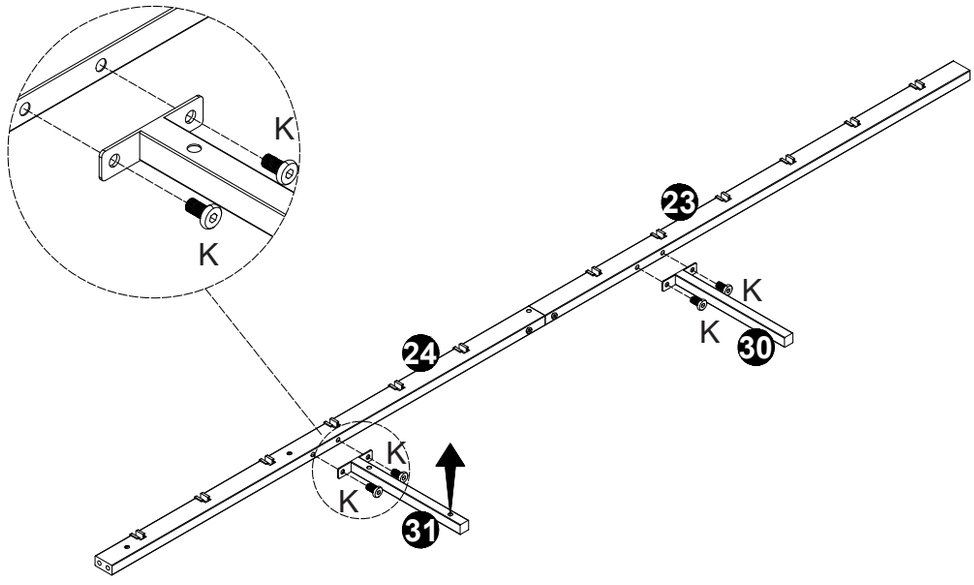

M6*12mm	
K	4PCS

3

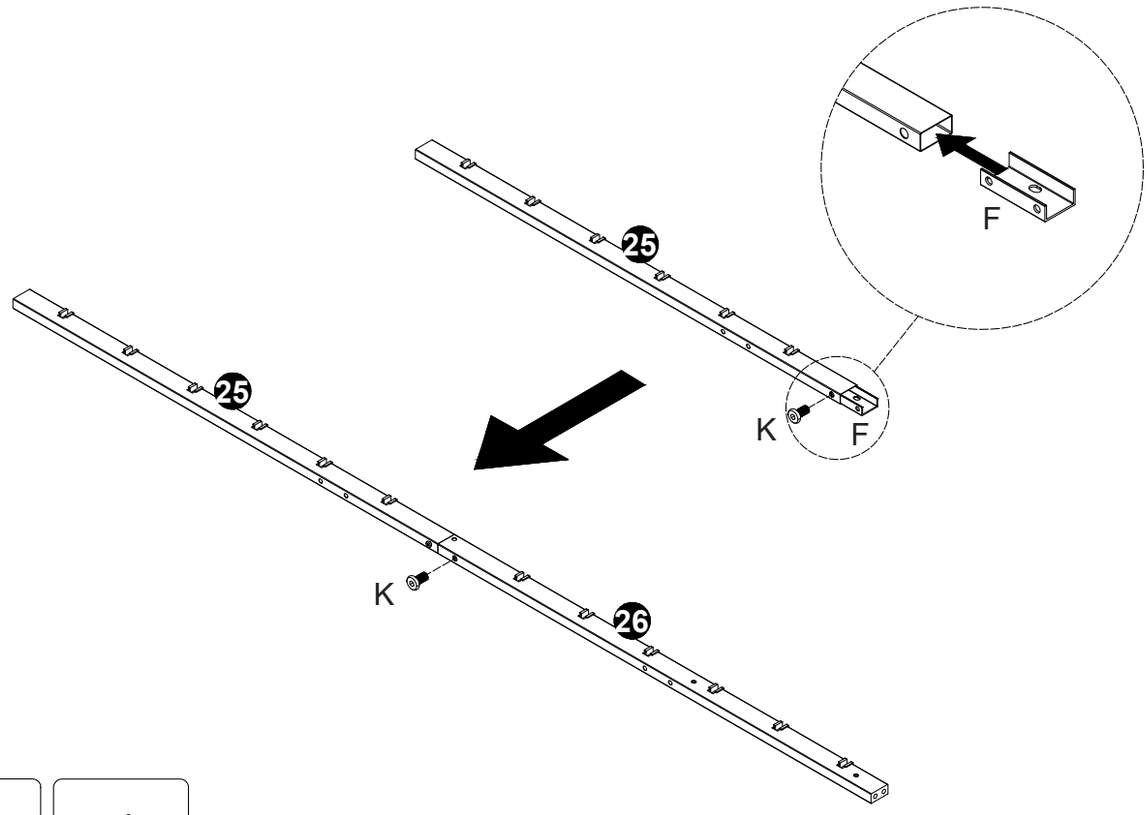

	
F	1PC

	
M6*12mm	
K	2PCS

4

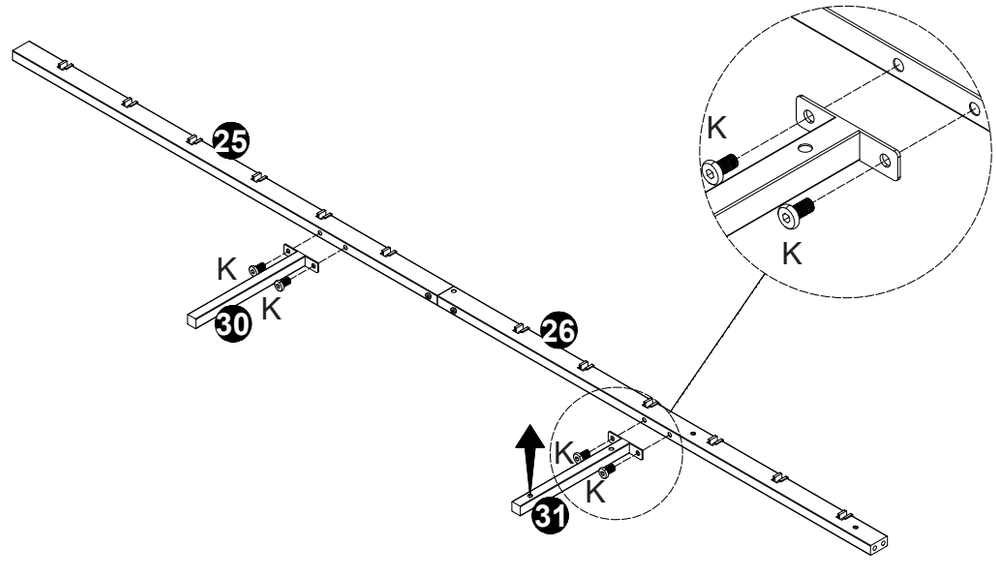

	
M6*12mm	
K	4PCS

5

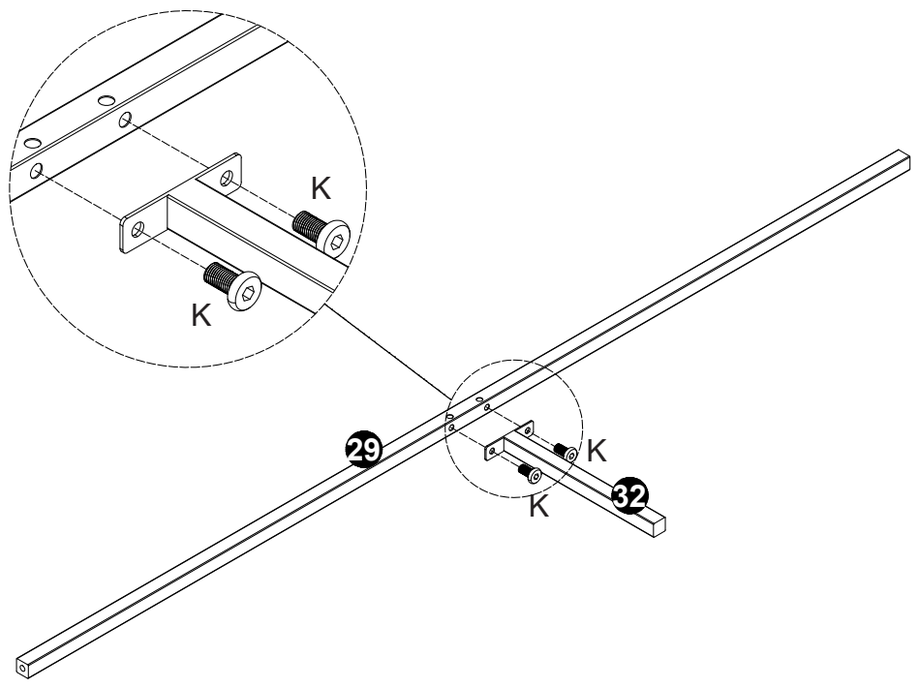

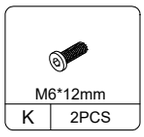

6

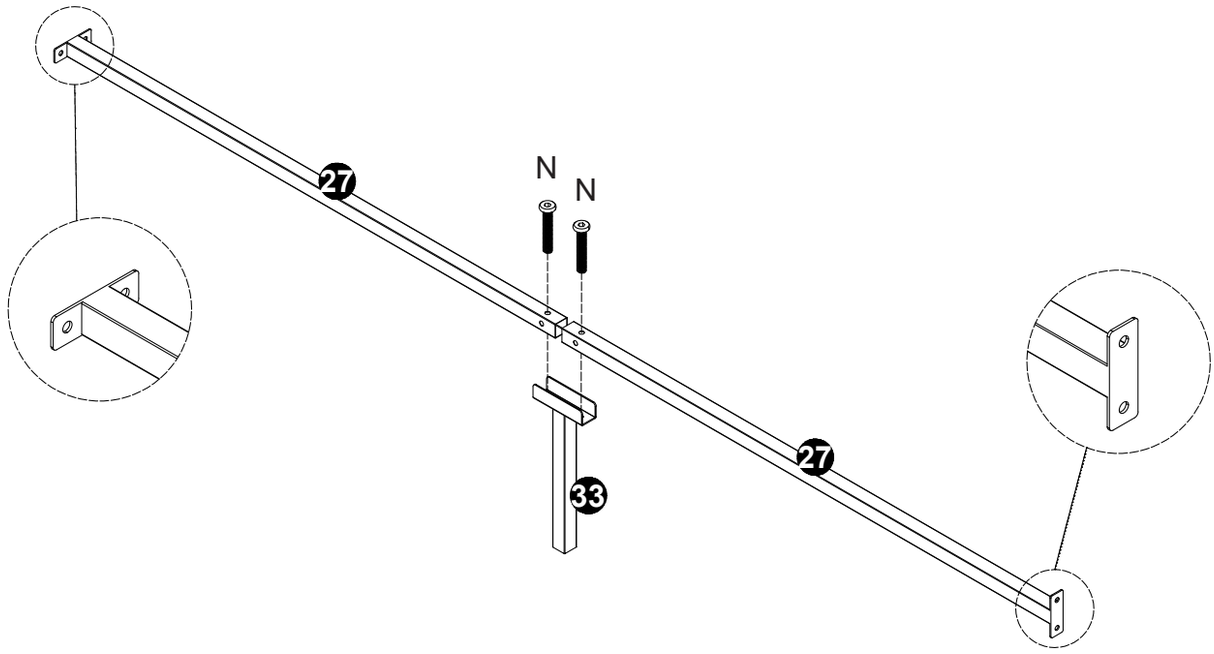

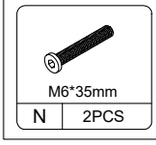

7

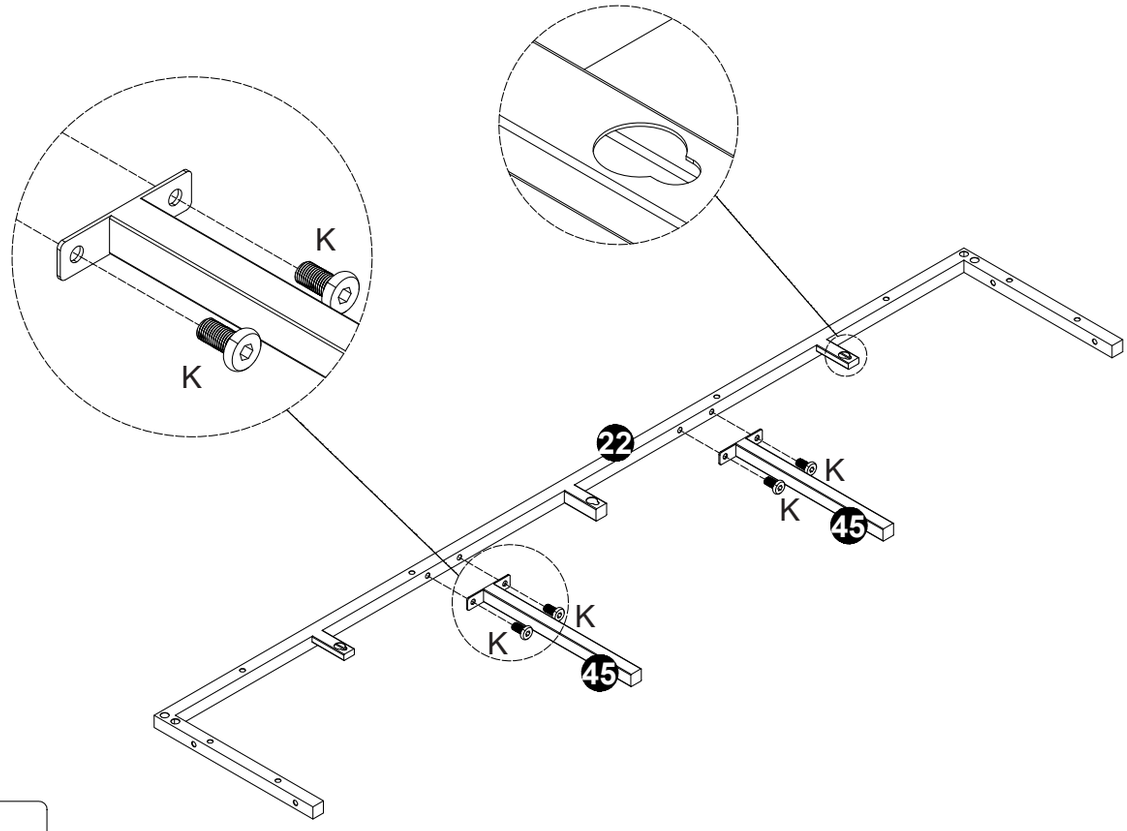
K
K
22
K
K
45
K
K
45


M6*12mm
K
4PCS

8

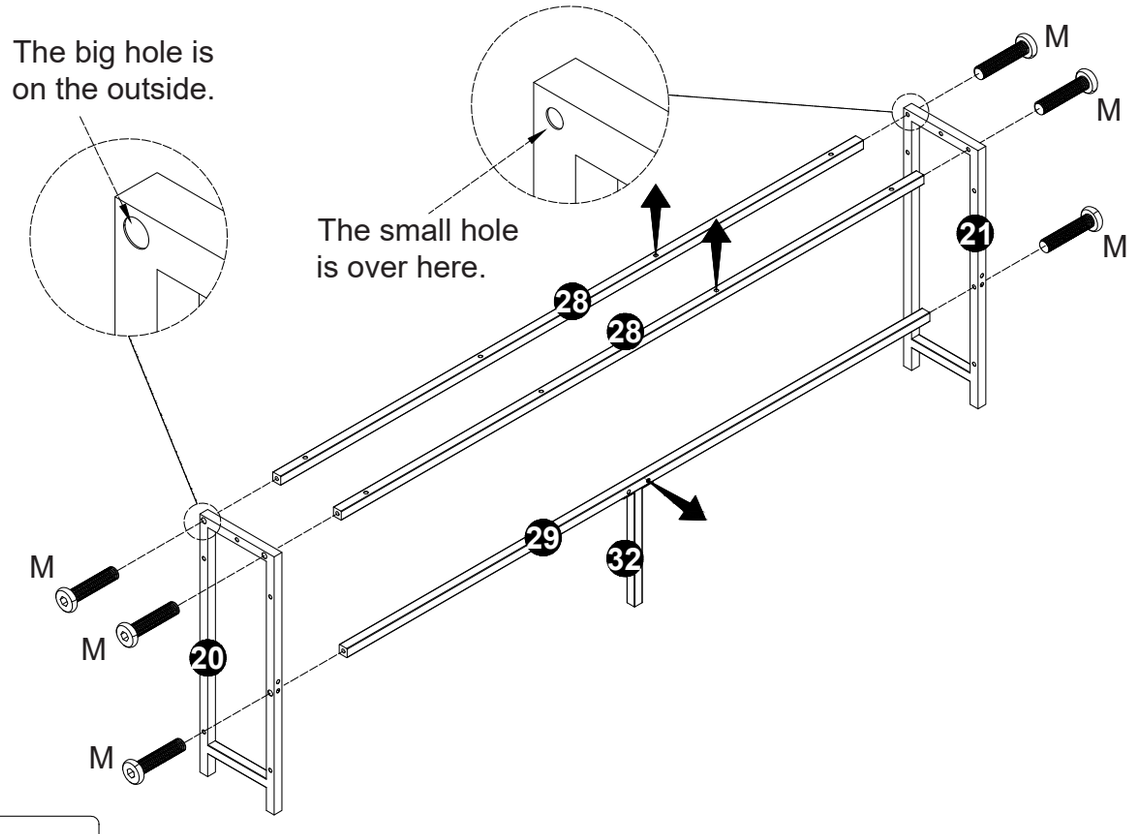
The big hole is on the outside.
The small hole is over here.
M
M
M
21
28
28
29
32
M
M
20
M

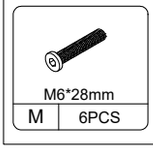
M6*28mm
M
6PCS

9

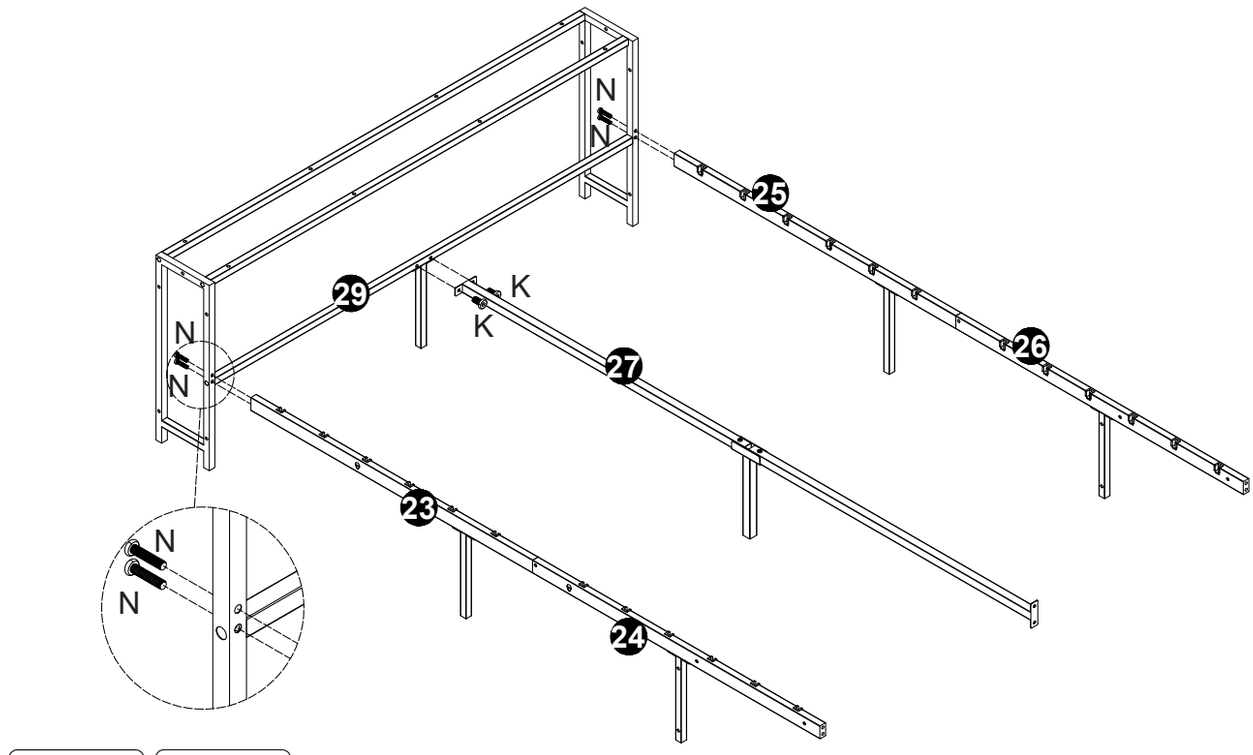

M6*12mm	M6*35mm
K 2PCS	N 4PCS

10

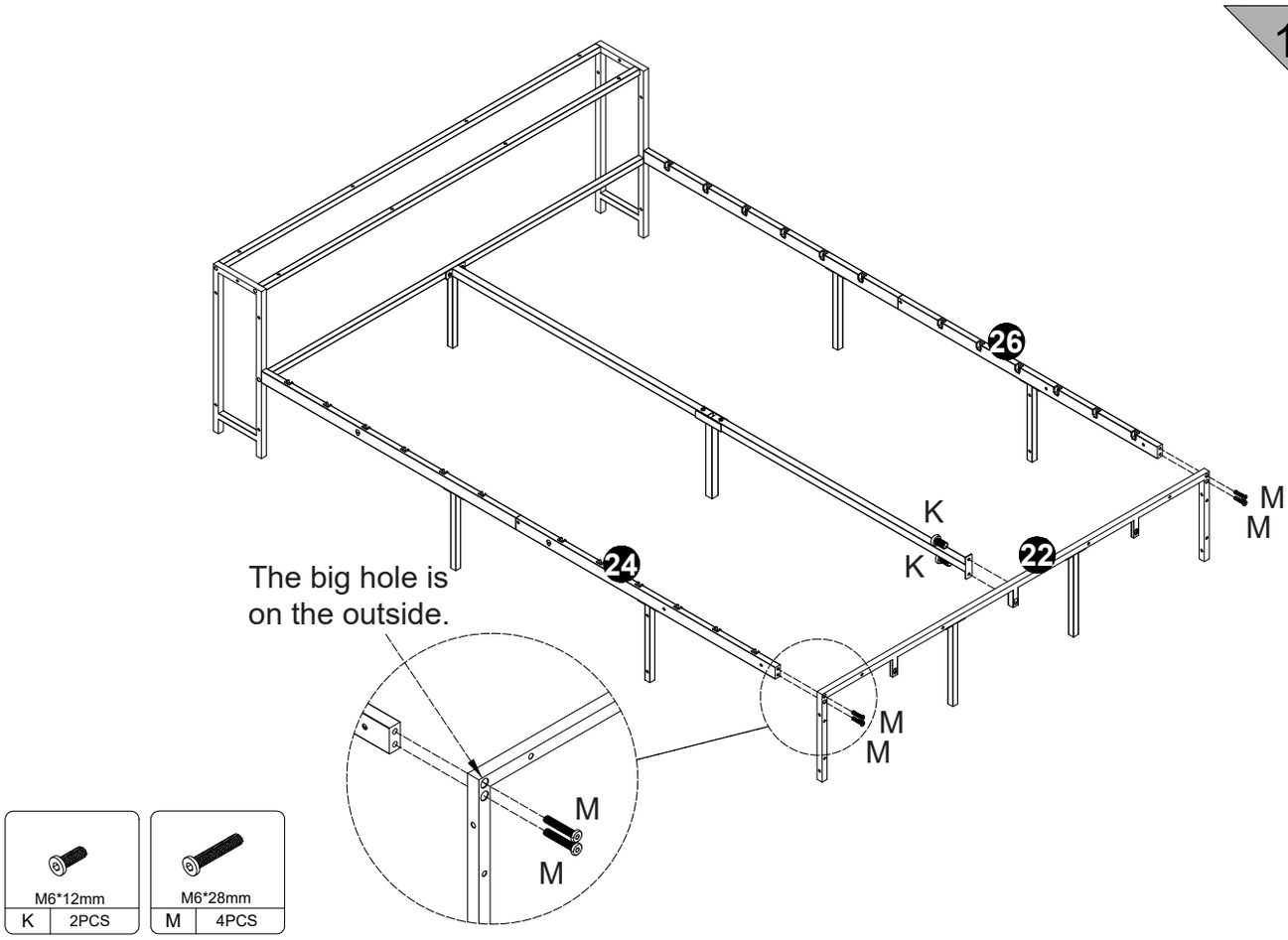

M6*12mm	M6*28mm
K 2PCS	M 4PCS

11

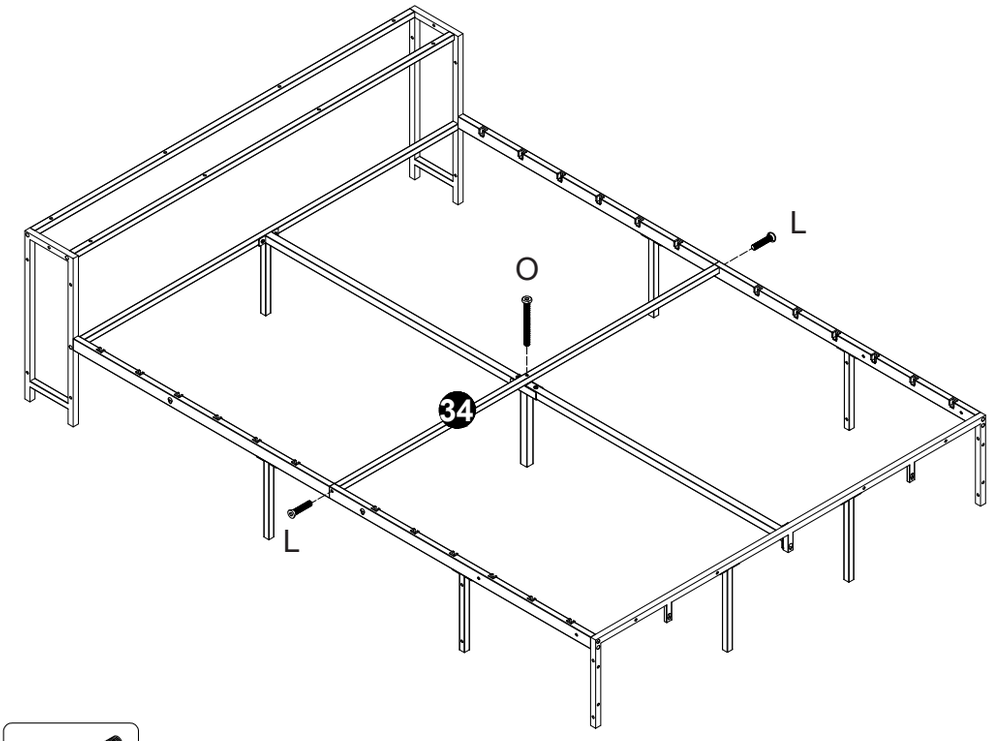



M6*30mm	
L	2PCS



M6*60mm	
O	1PC

12

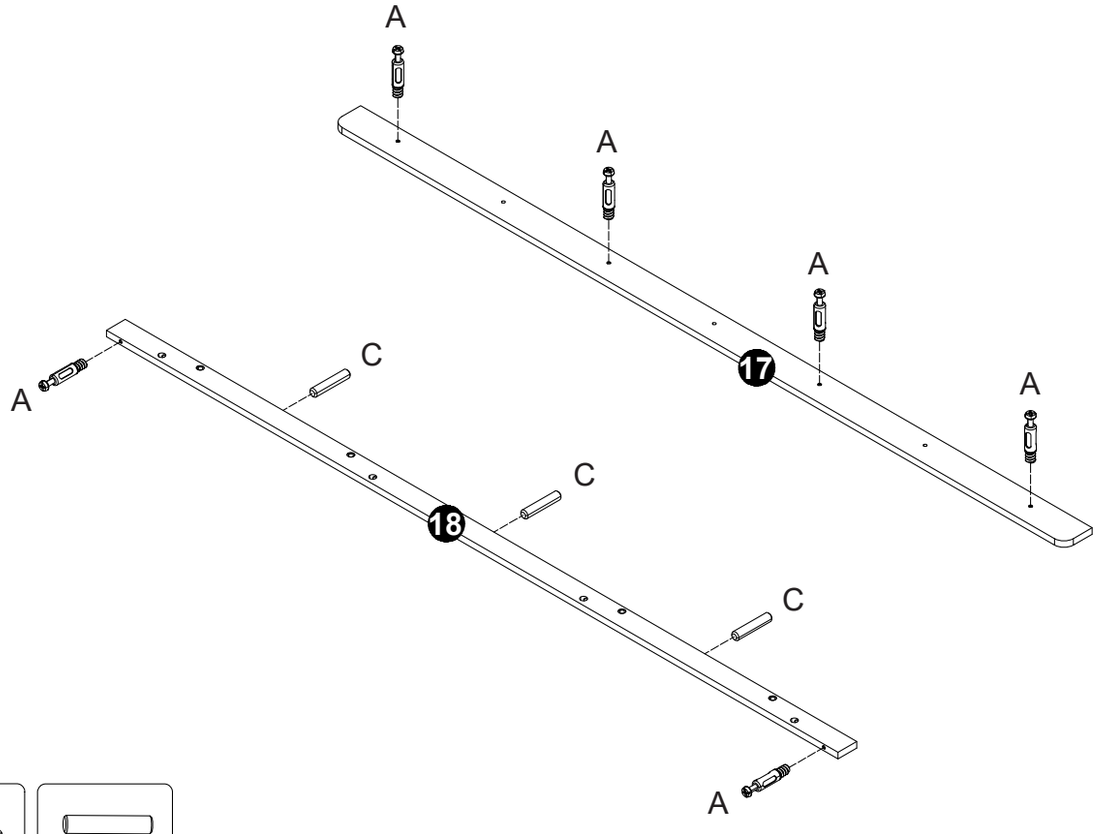

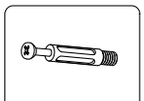

A	6PCS

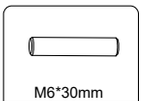

M6*30mm	
C	3PCS

13

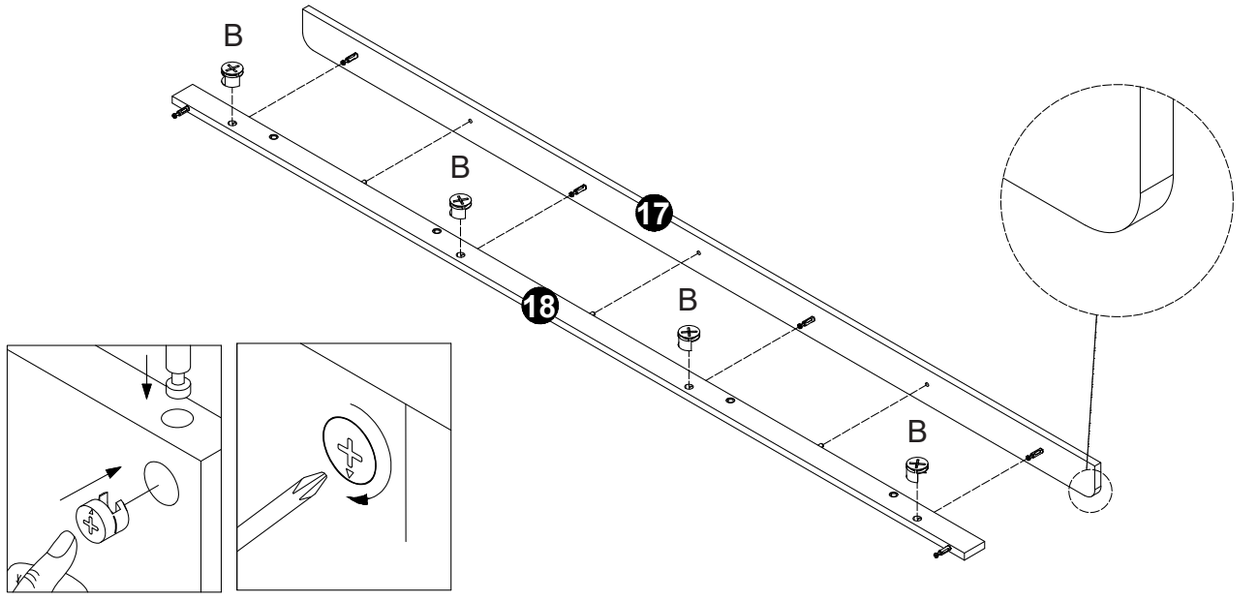

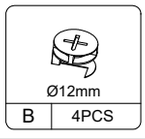

14

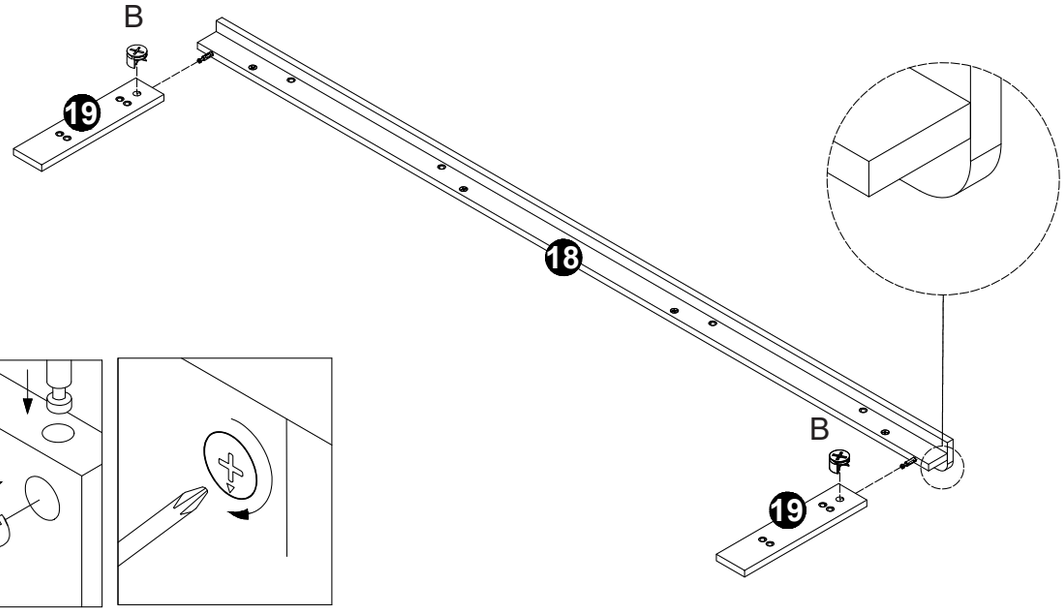

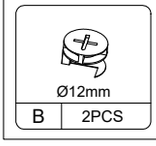

15

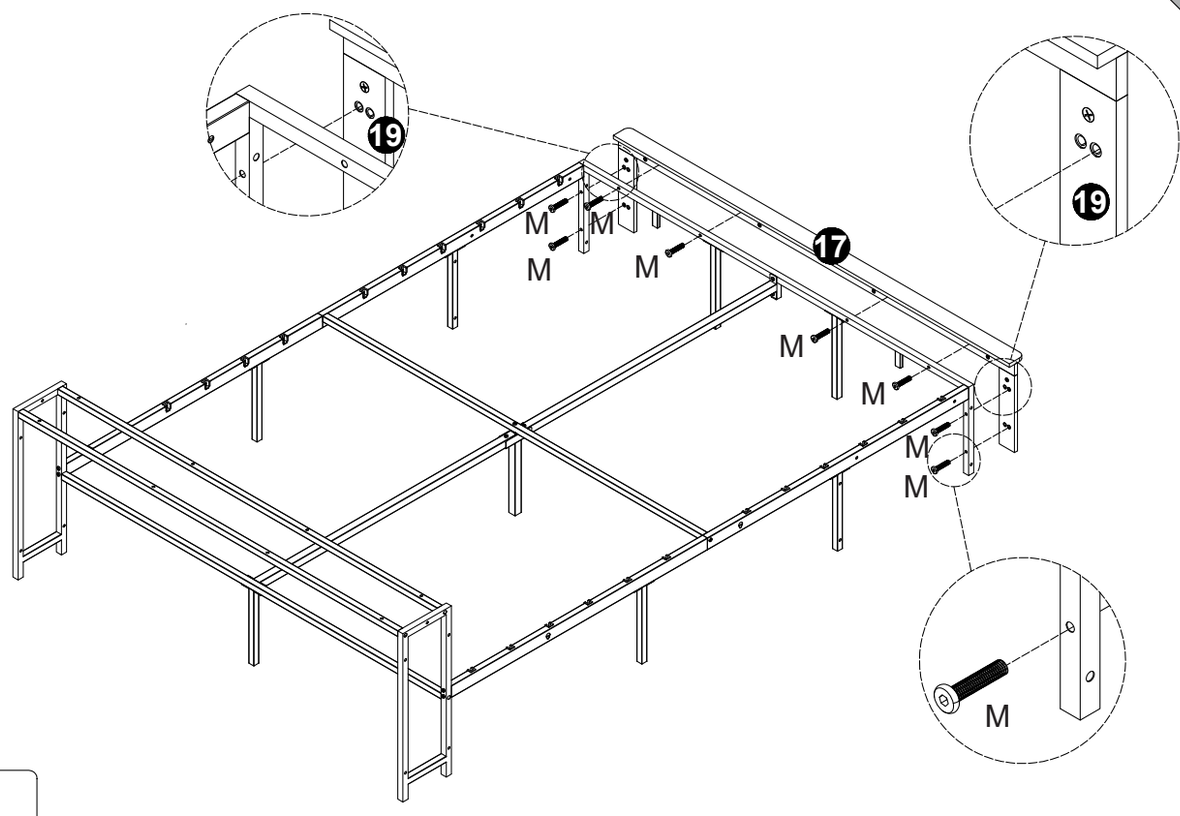



M6*28mm	
M	8PCS

16

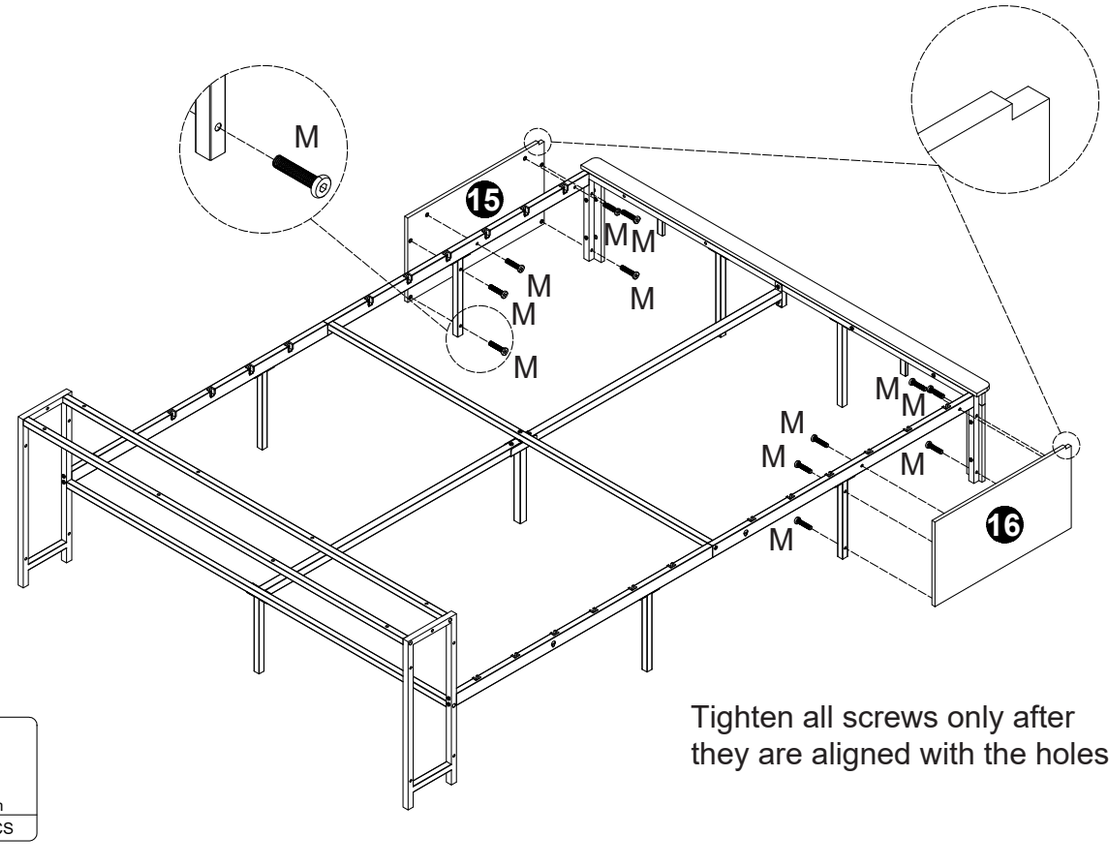

Tighten all screws only after they are aligned with the holes.



M6*28mm	
M	12PCS

17

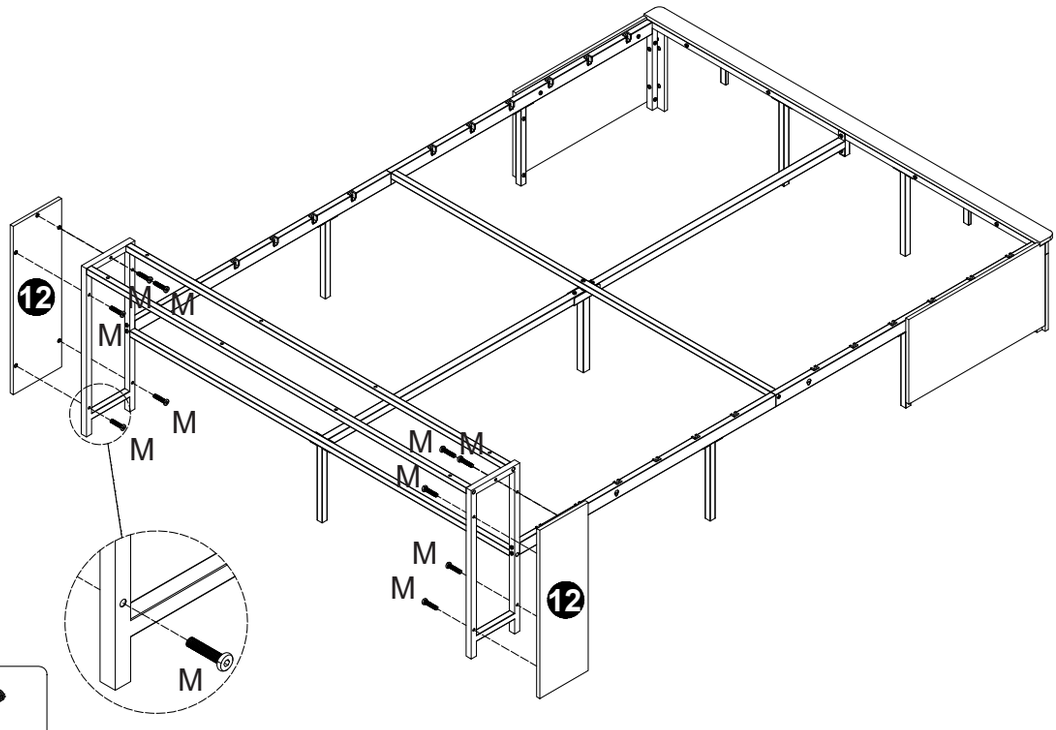



M6*28mm	
M	10PCS

18

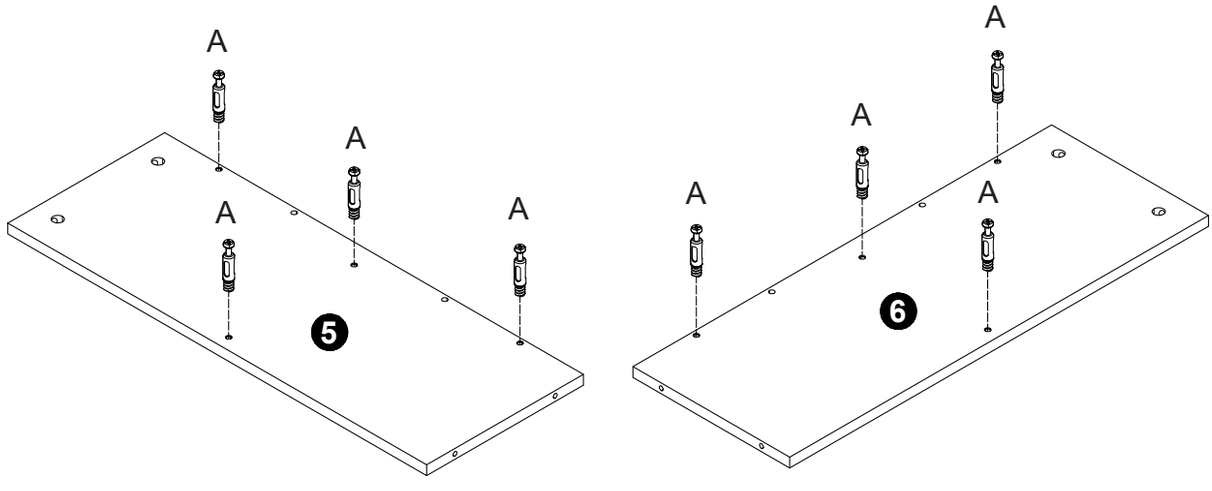

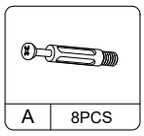

A	8PCS

19

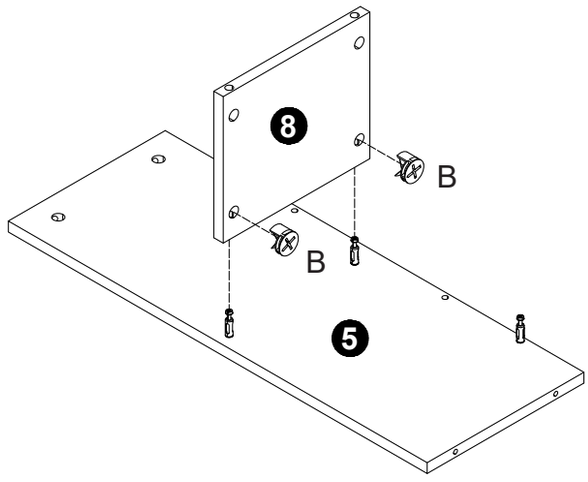

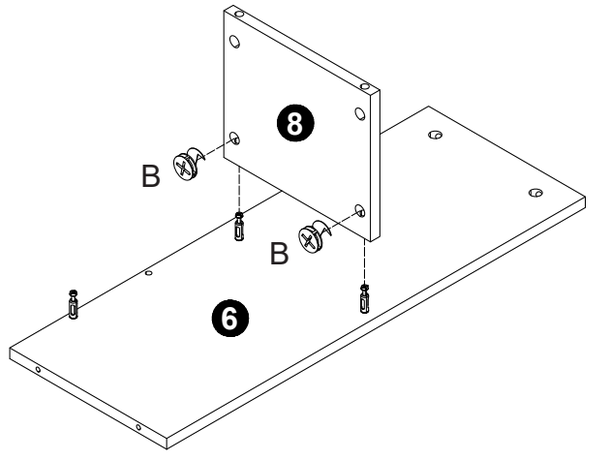

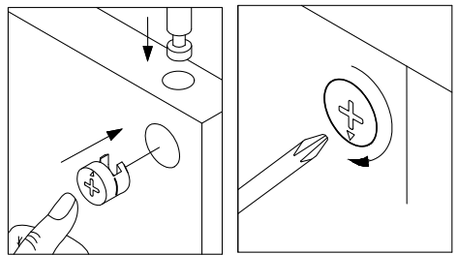

 Ø12mm	
B	4PCS

20

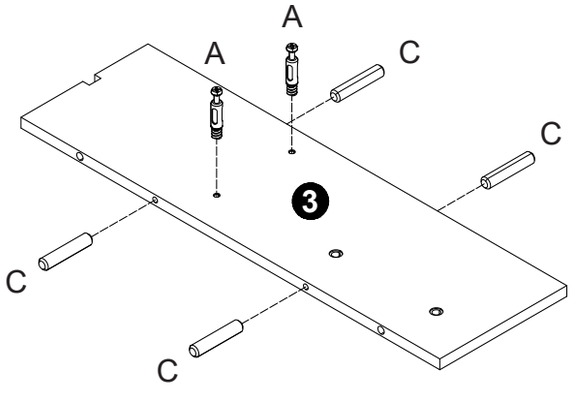

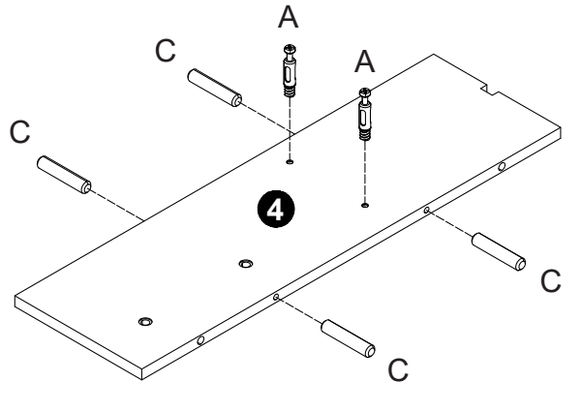

	
A	4PCS

 M6*30mm	
C	8PCS

21

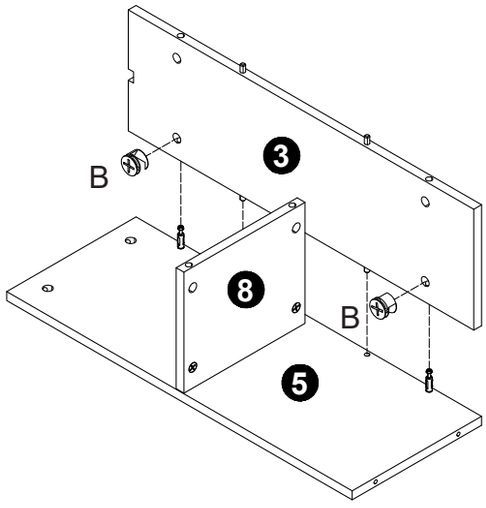

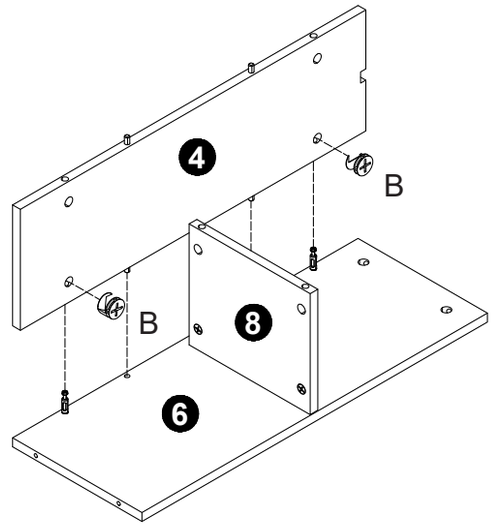

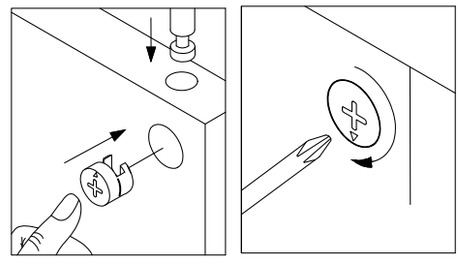

Ø12mm	
B	4PCS

22

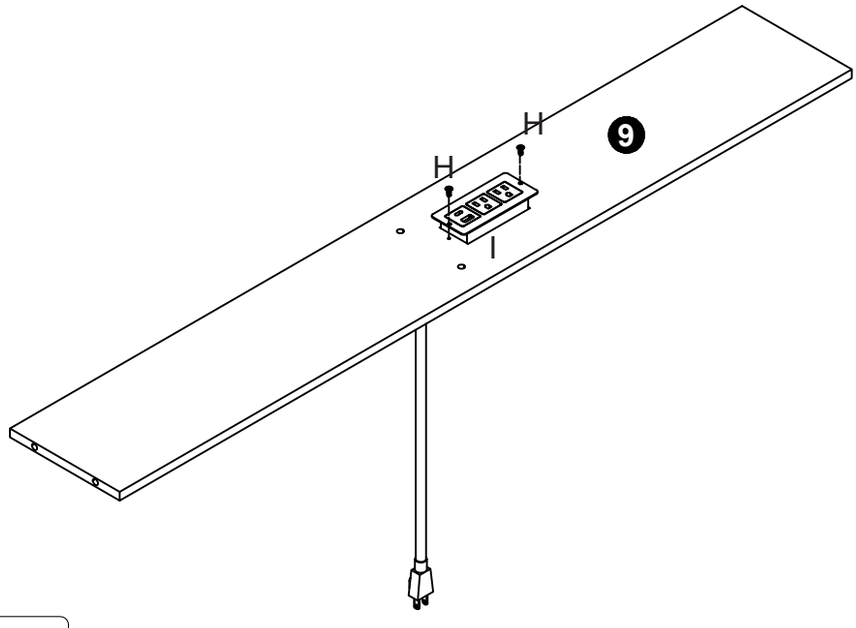

M3.5*12mm	
H	2PCS

I	1PC

23

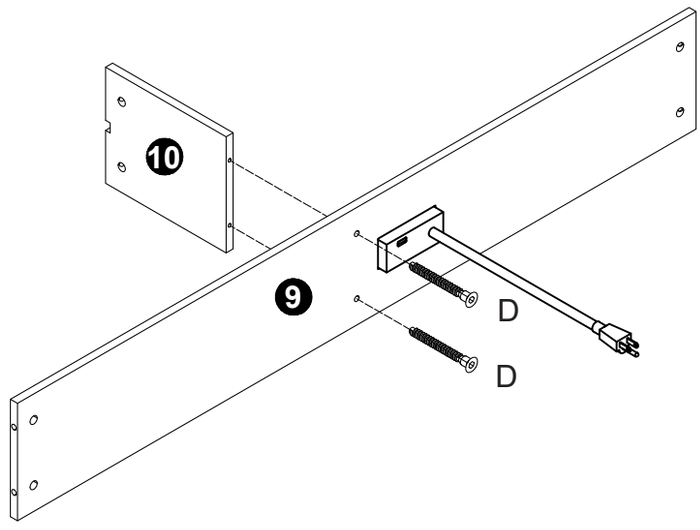



M6.3*40mm	
D	2PCS

24

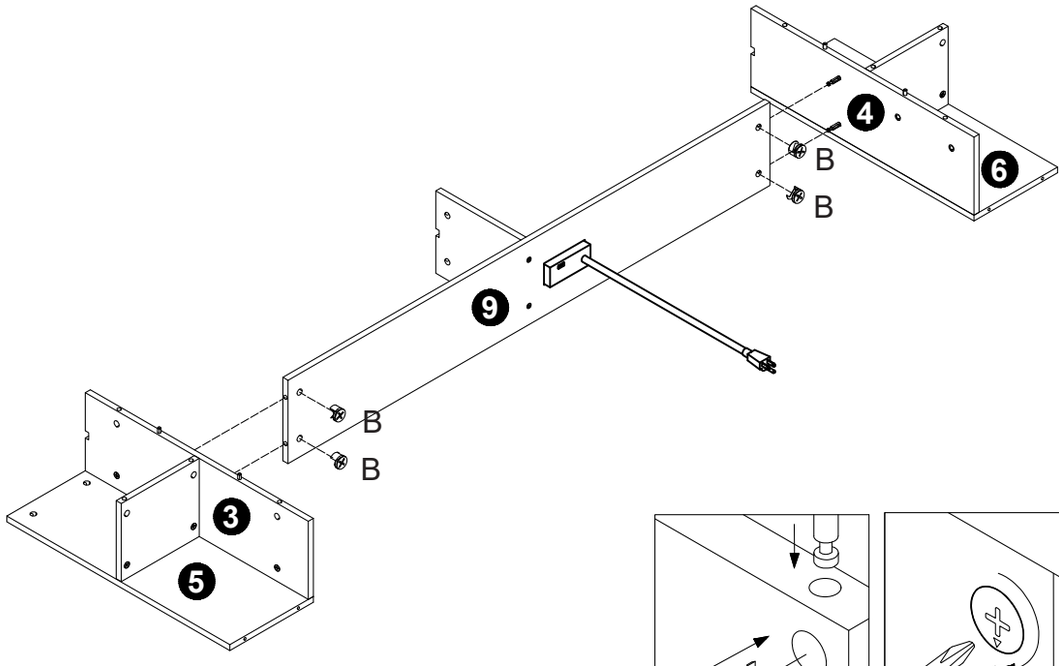



Ø12mm	
B	4PCS

25

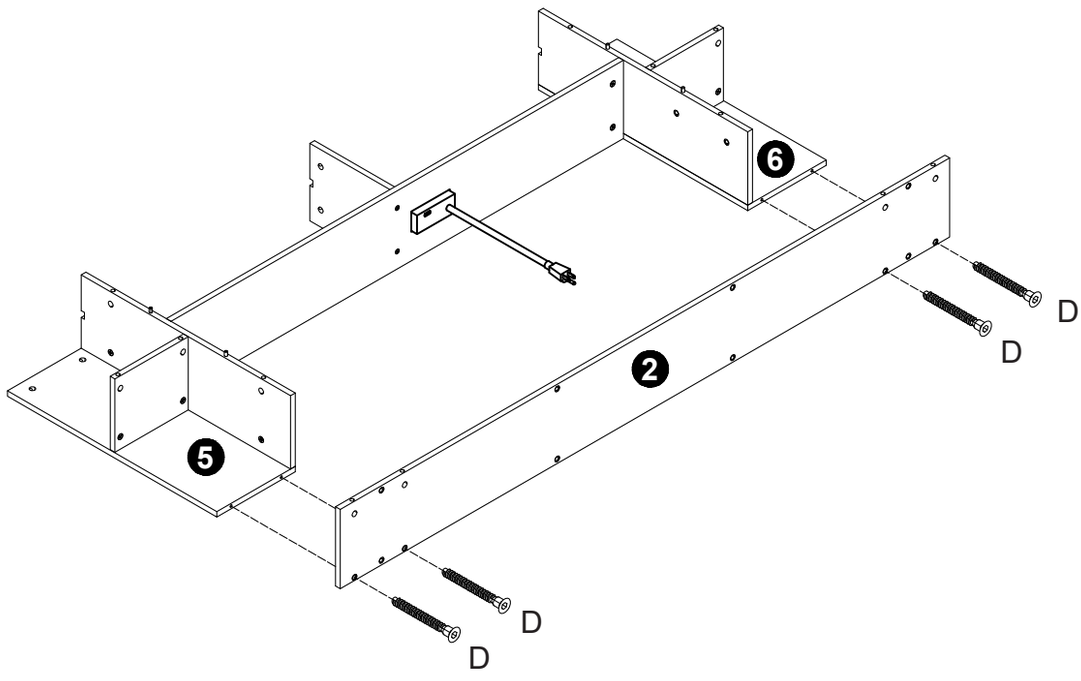



M6.3*40mm	
D	4PCS

26

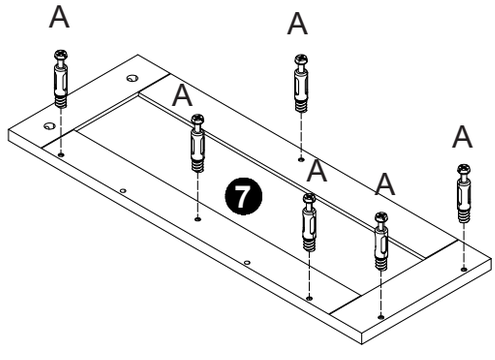

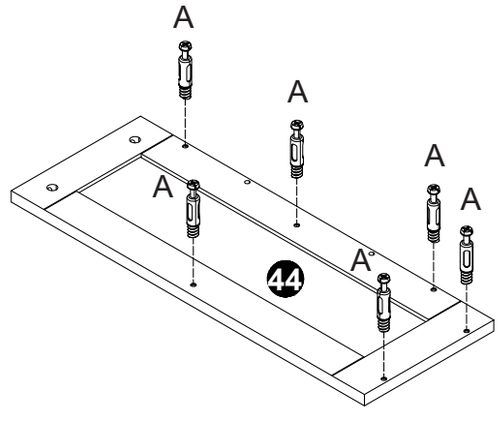



A	12PCS

27

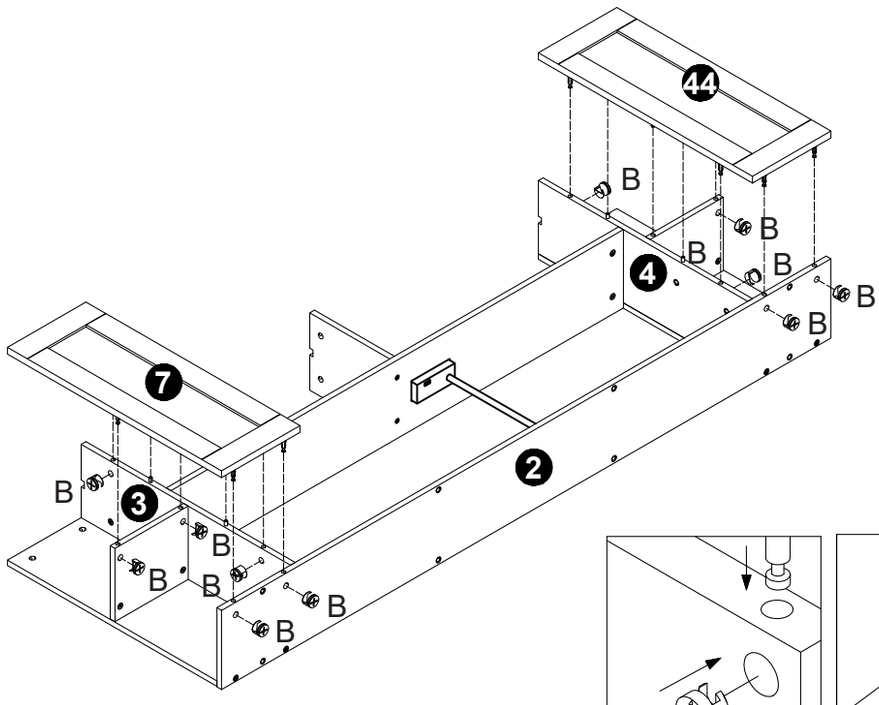

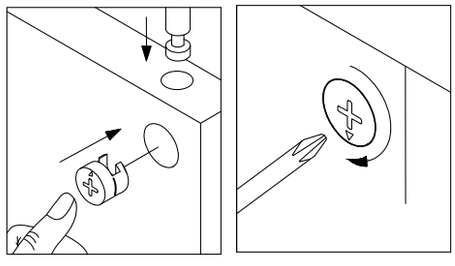



Ø12mm	
B	12PCS

28

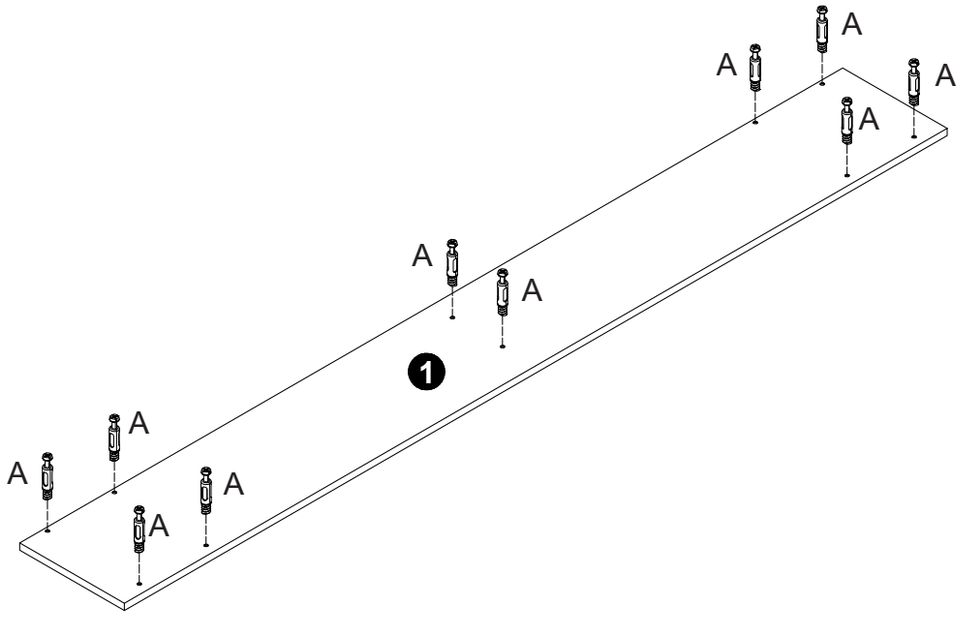



A	10PCS

29

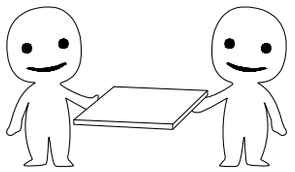

Need Two or More
People To Complete

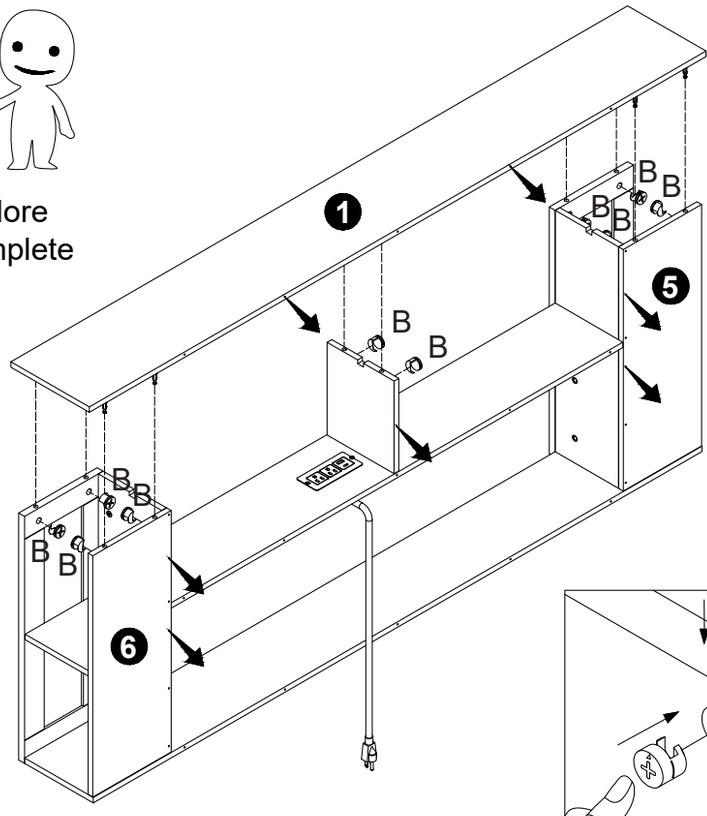

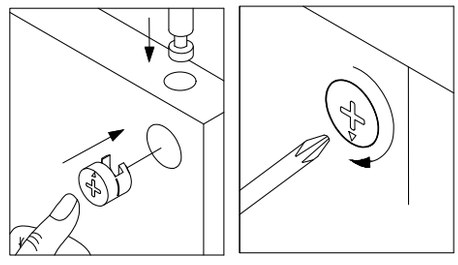



Ø12mm	
B	10PCS

30

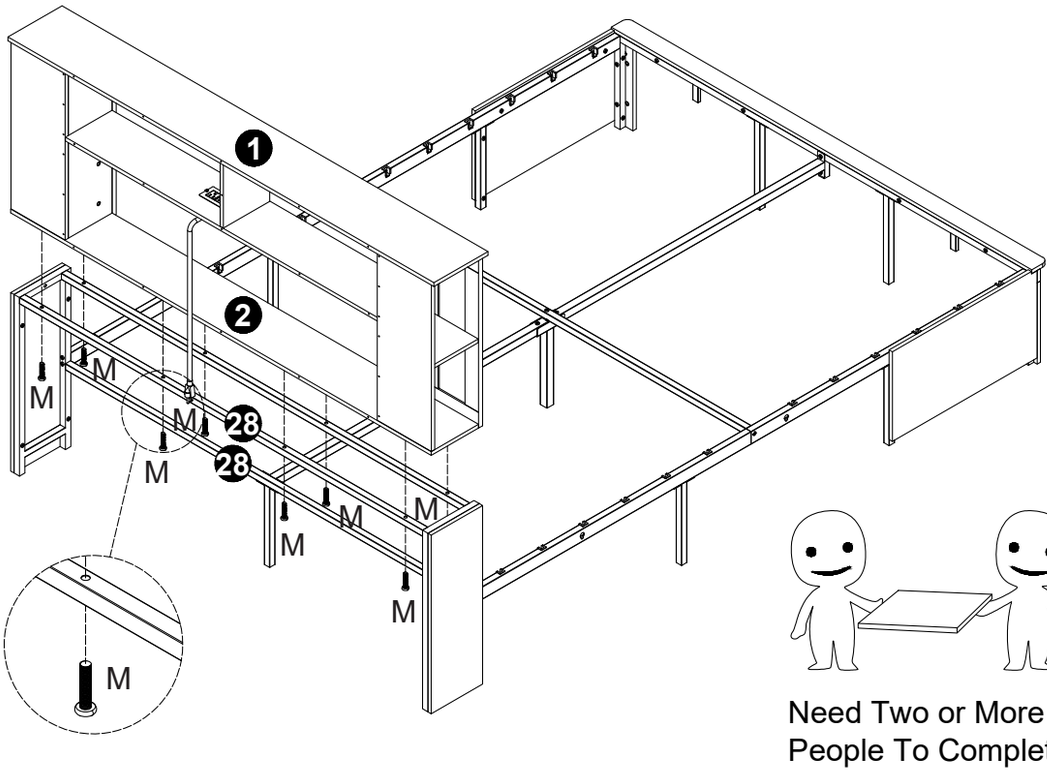

Need Two or More
People To Complete



M6*28mm	
M	8PCS

a < b

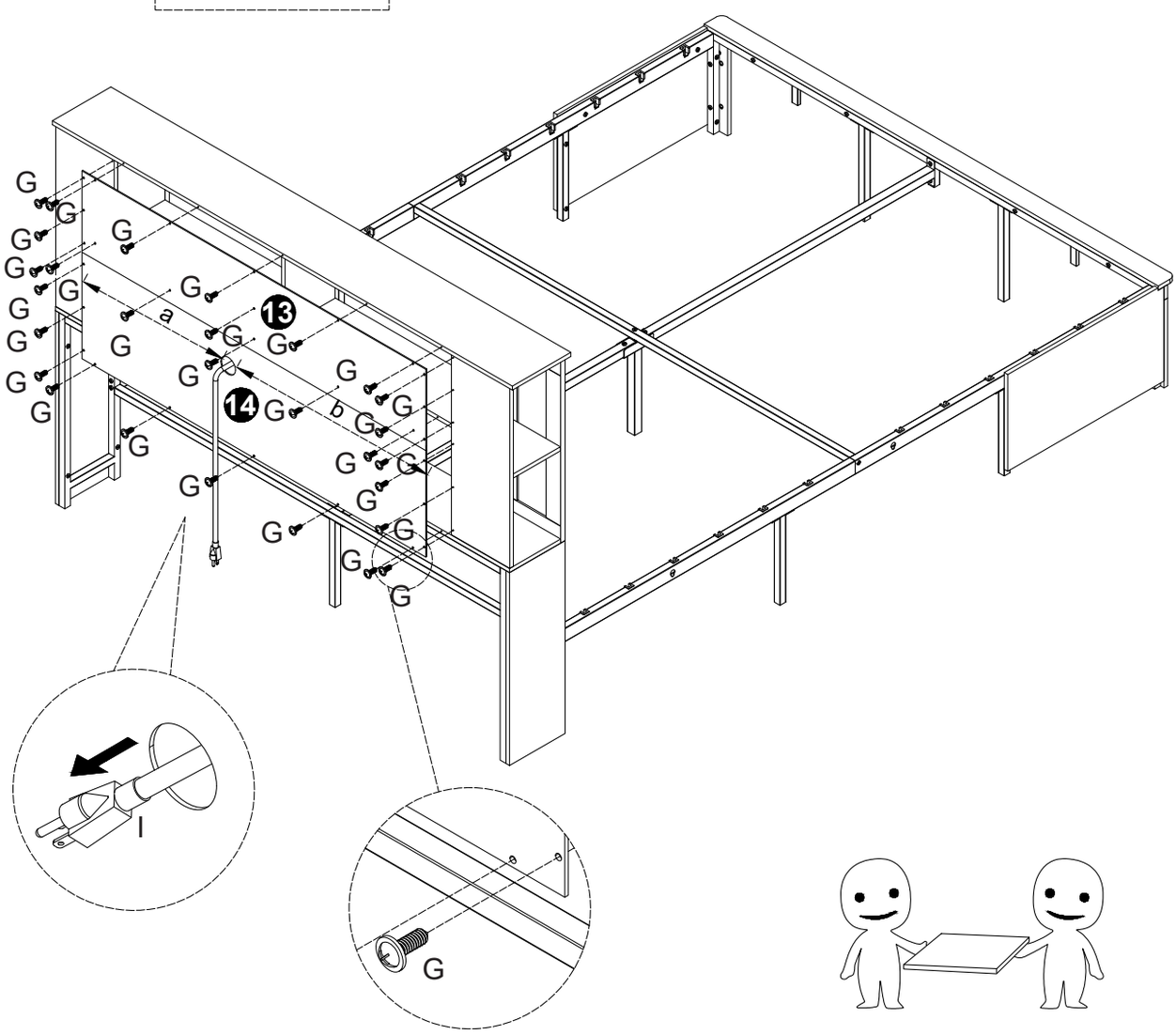

Need Two or More
People To Complete



M4*12mm	
G	28PCS

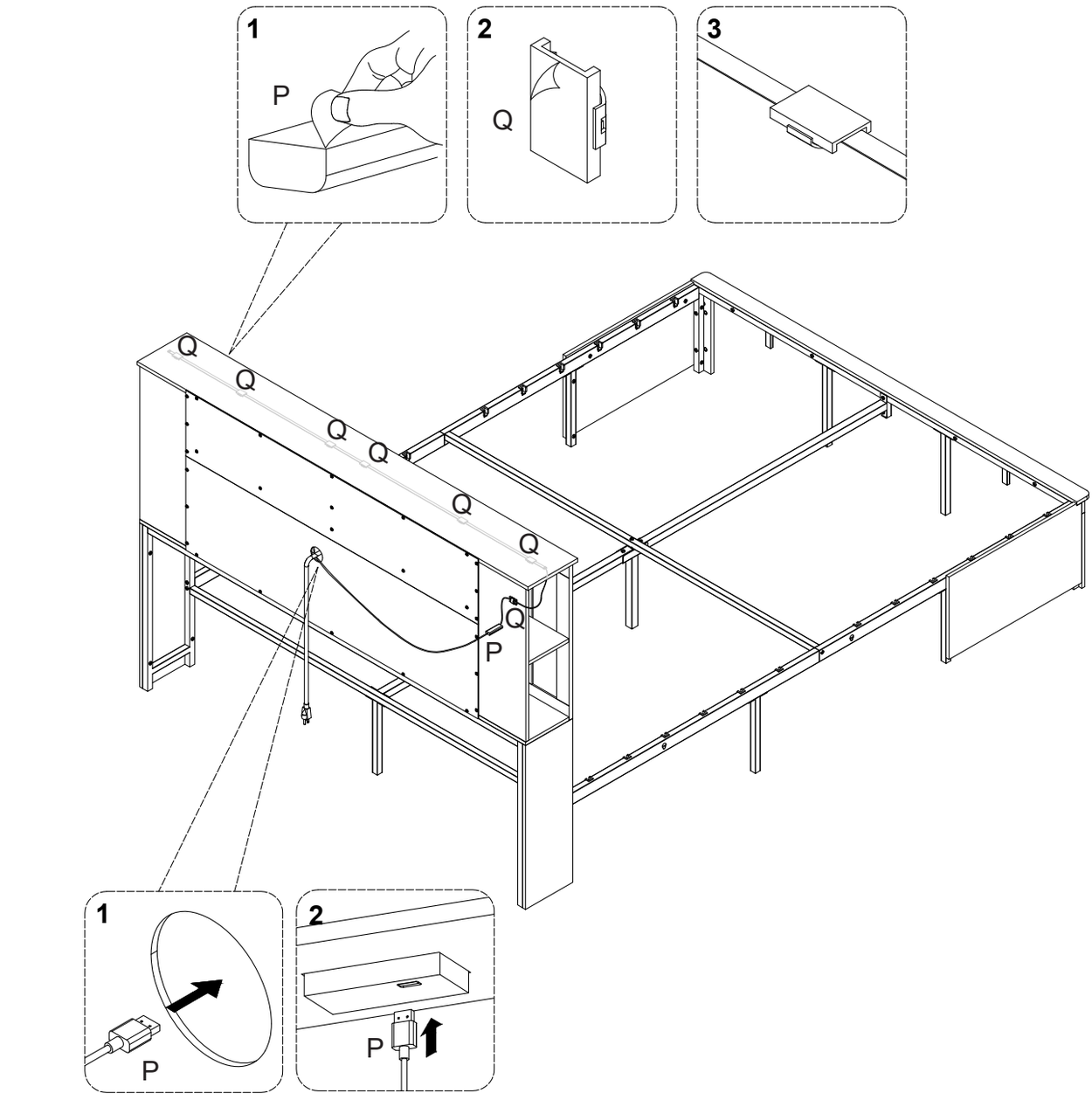
1
P
2
Q
3
Q
Q
Q
Q
Q
Q
Q
P
1
P
2
P

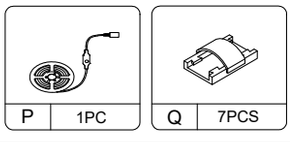
P
1PC
Q
7PCS

33

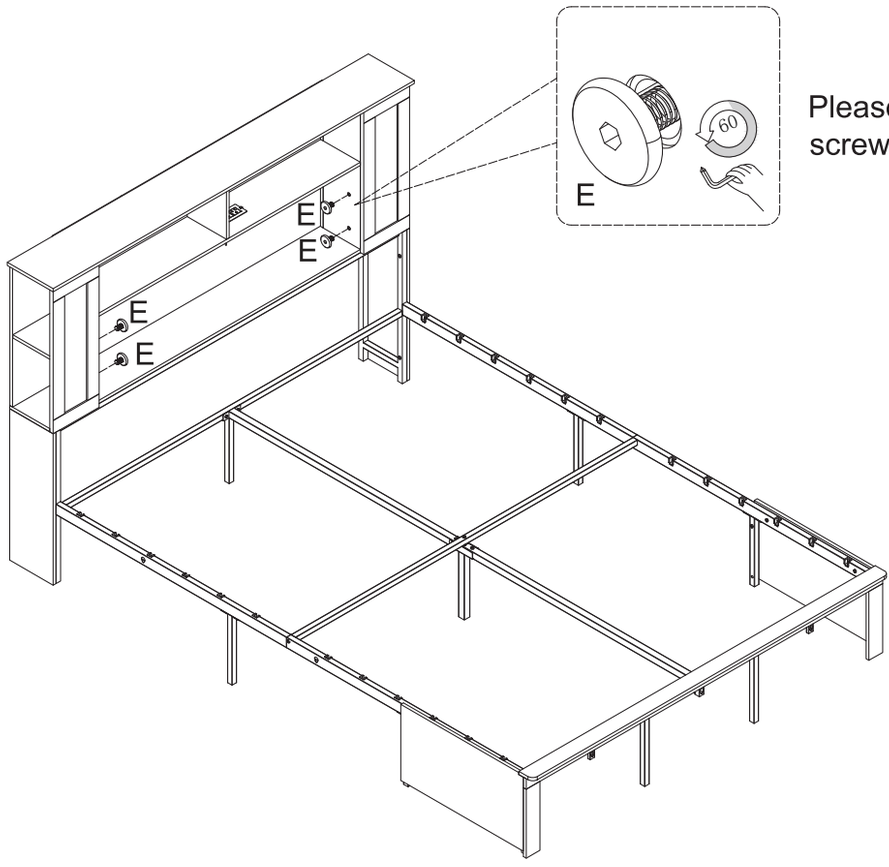

Please tighten the screws to 60% first.



M6*10mm	
E	4PCS

34

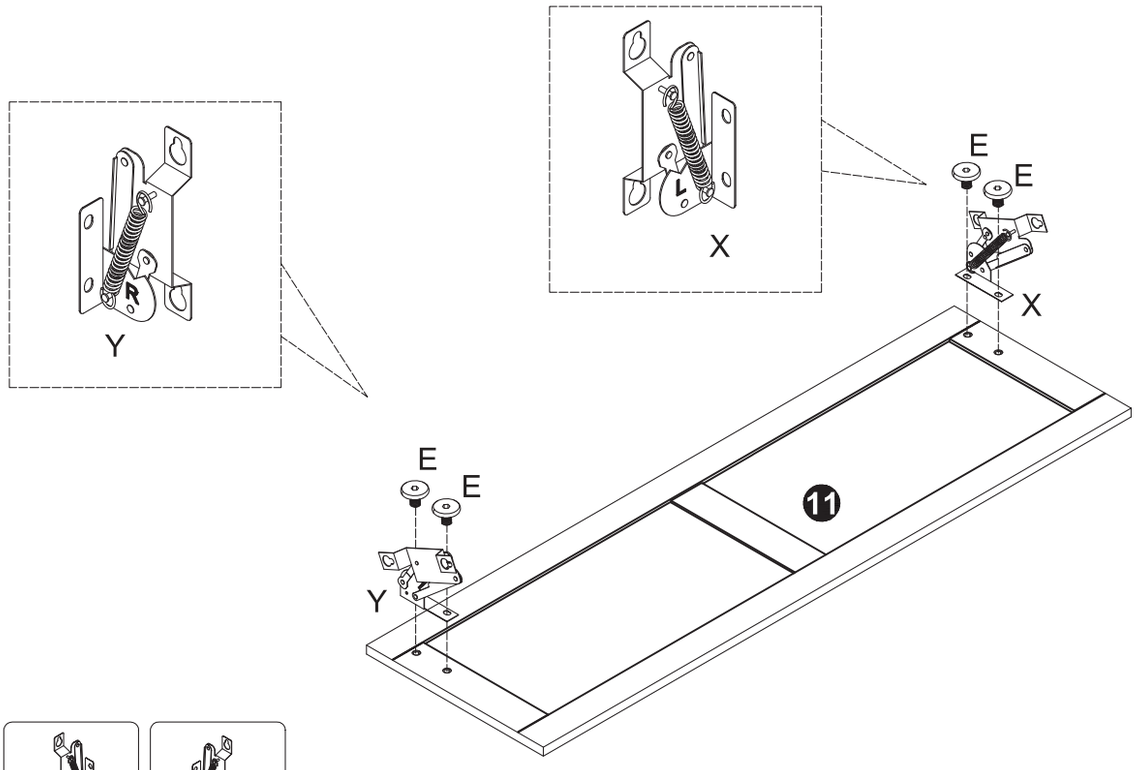



M6*10mm	
E	4PCS

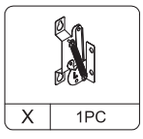

X	1PC

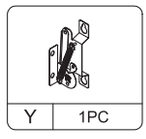

Y	1PC

35

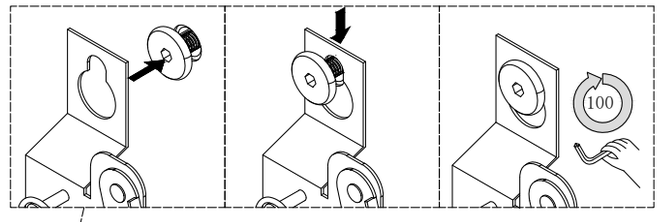

Tighten the screws here.

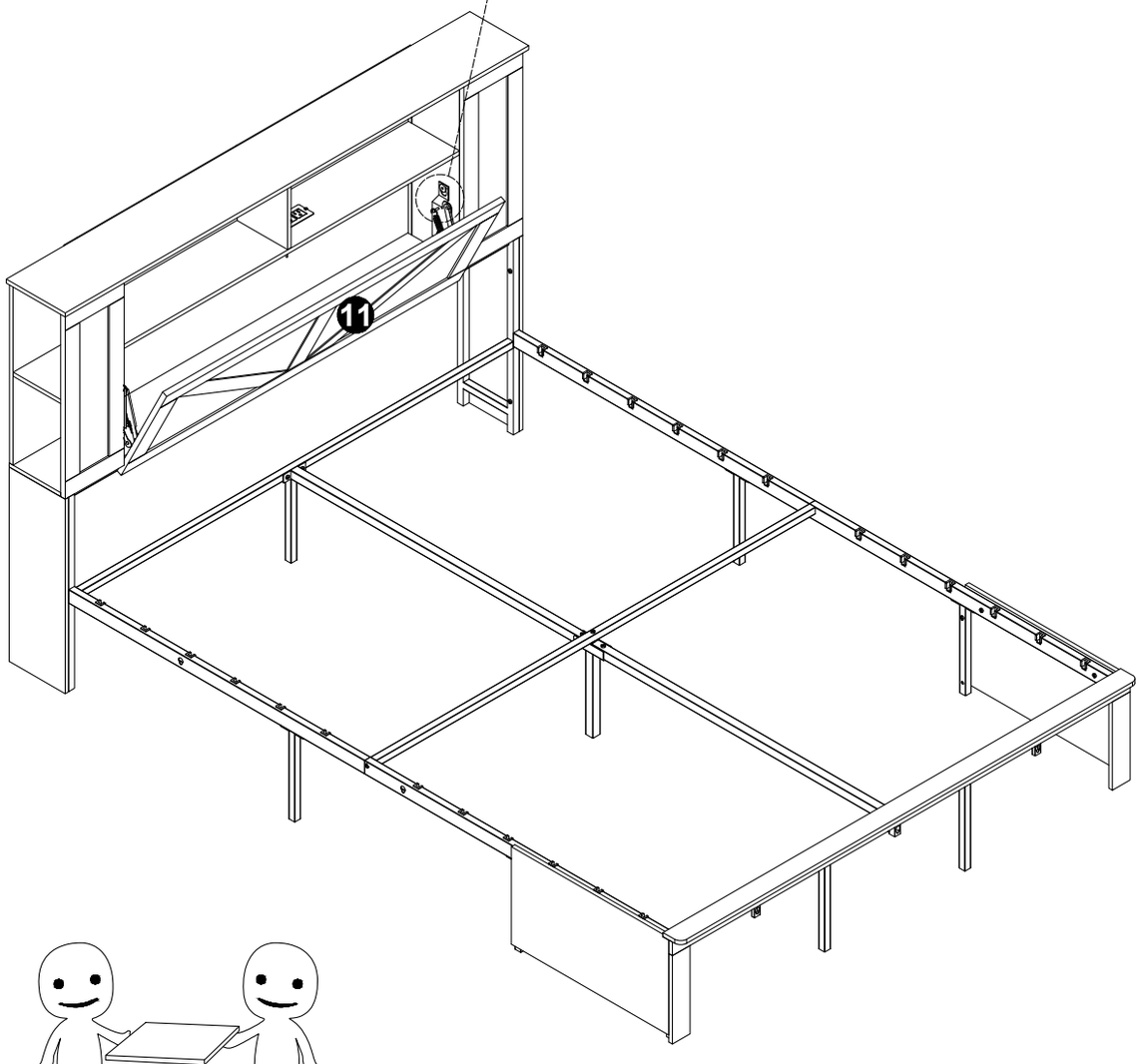

Need Two or More
People To Complete

36

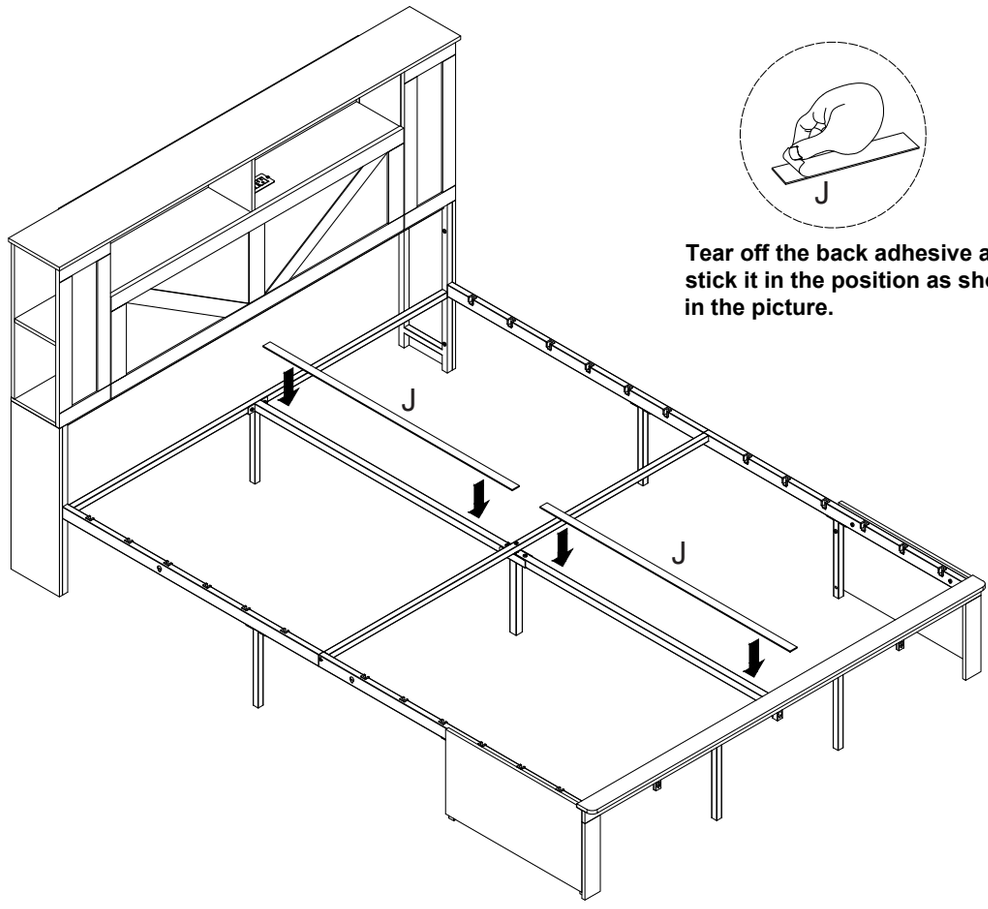

Tear off the back adhesive and stick it in the position as shown in the picture.

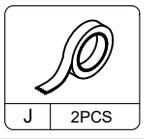

J	2PCS

37

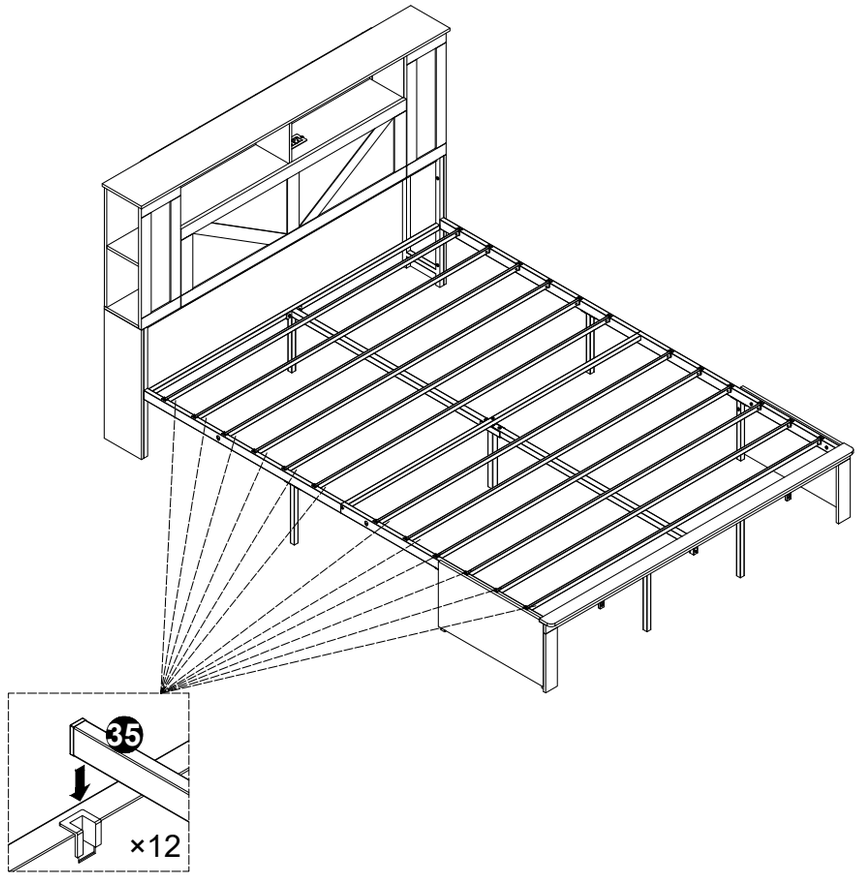

38

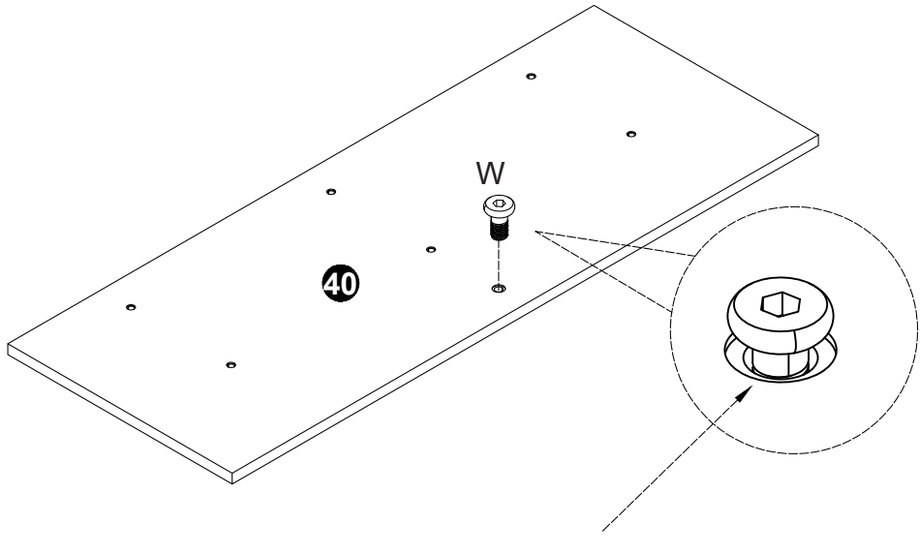

Install Screw "W" until it reaches the end of the threads. Do not over-tighten.

×4

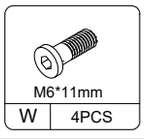

39

Note that the directions of base plates 42 and 43 are intersecting after unfolding.

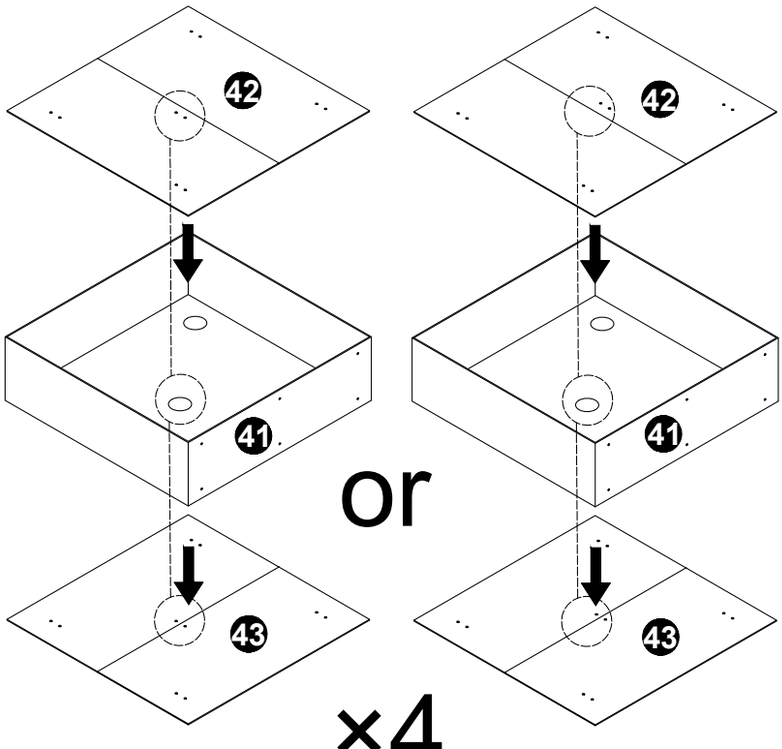

×4

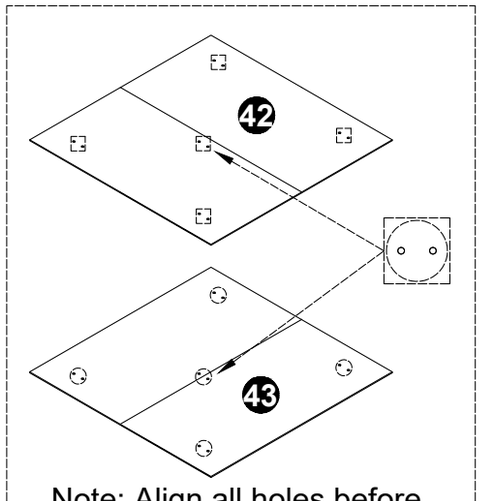

Note: Align all holes before proceeding to the next step, regardless of mounting orientation.

Installation subject to this page.

40

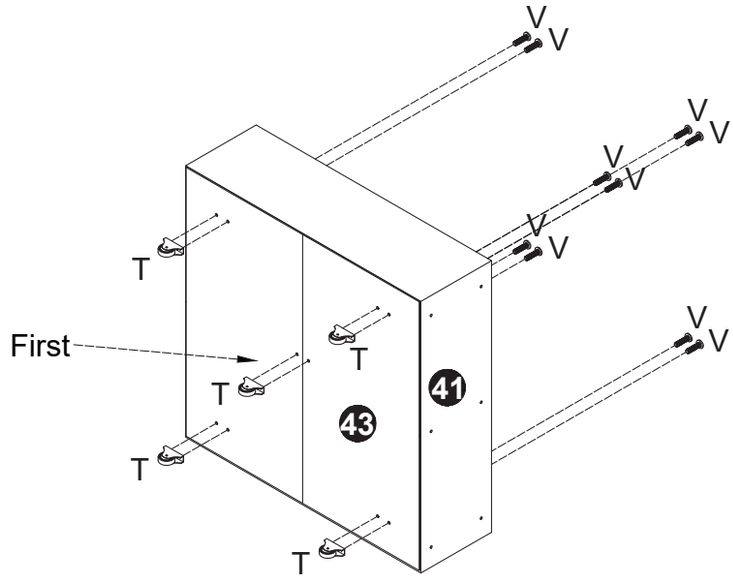



T	20PCS



M4*16mm

V	40PCS

×4

When installing the drawer wheels, install the middle one first for easier installation.

41

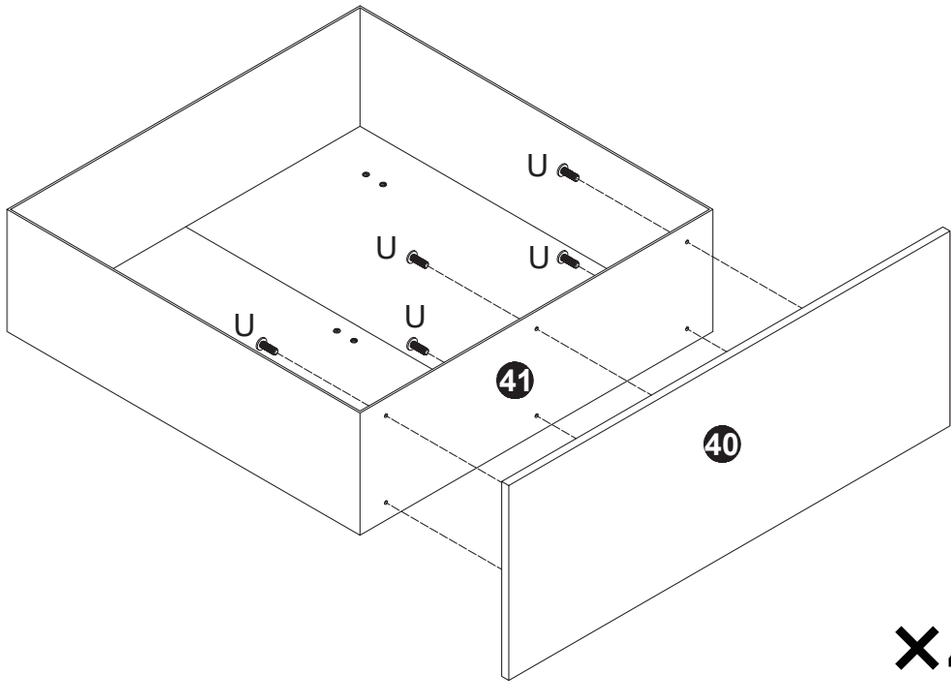

×4



M4*10mm

U	24PCS

42

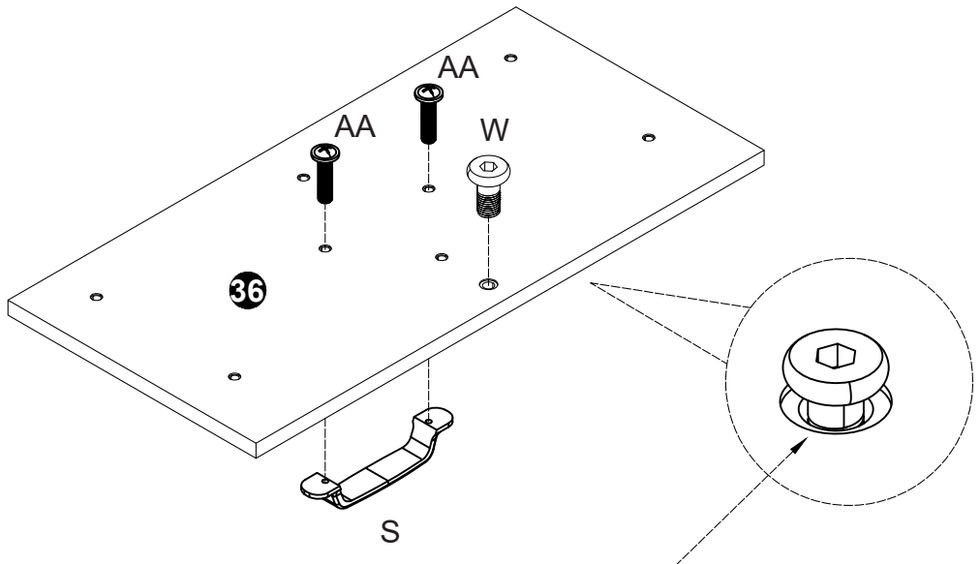

Install Screw "W" until it reaches the end of the threads. Do not over-tighten.

×3

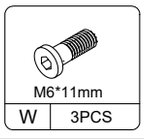

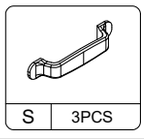

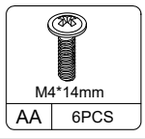

43

Note that the directions of base plates 38 and 39 are intersecting after unfolding.

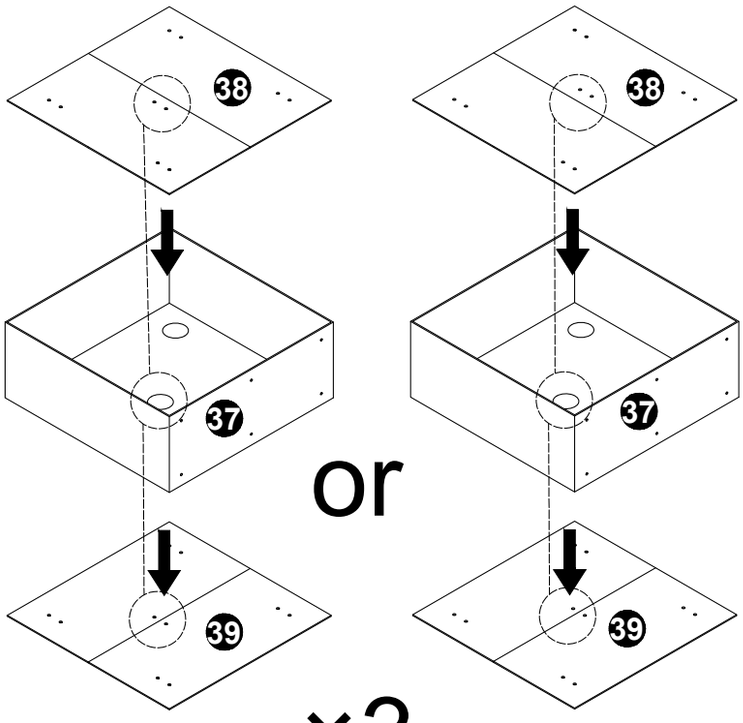

×3

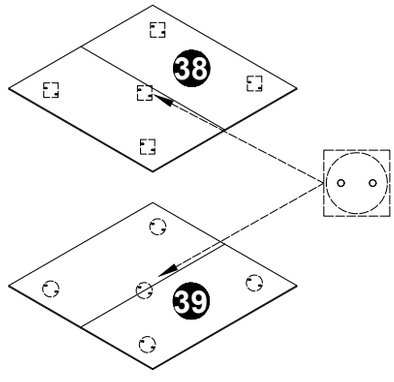

Note: Align all holes before proceeding to the next step, regardless of mounting orientation.

Installation subject to this page.

44

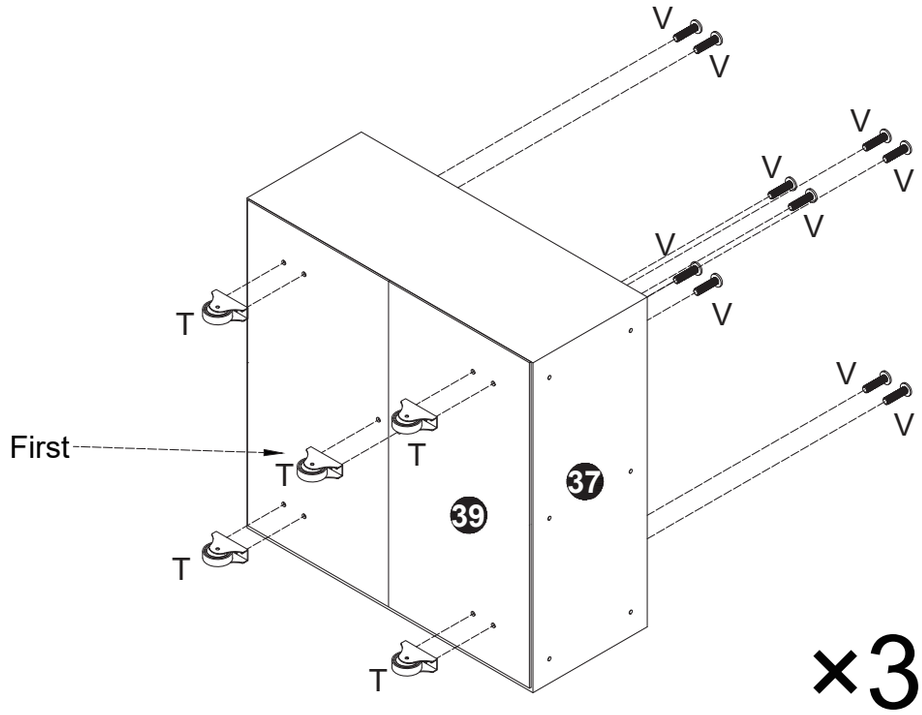

×3

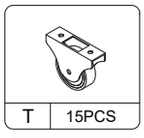

T	15PCS



M4*16mm

V	30PCS

When installing the drawer wheels, install the middle one first for easier installation.

45

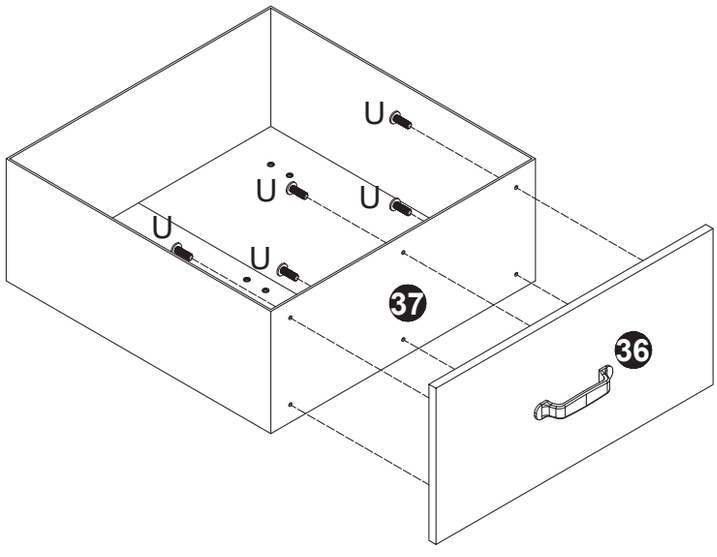

×3



M4*10mm

U	18PCS

Note that when screwing the U screw into the #36 board, do not tighten all the screws. After aligning the drawer handle with the hole, tighten the screws.

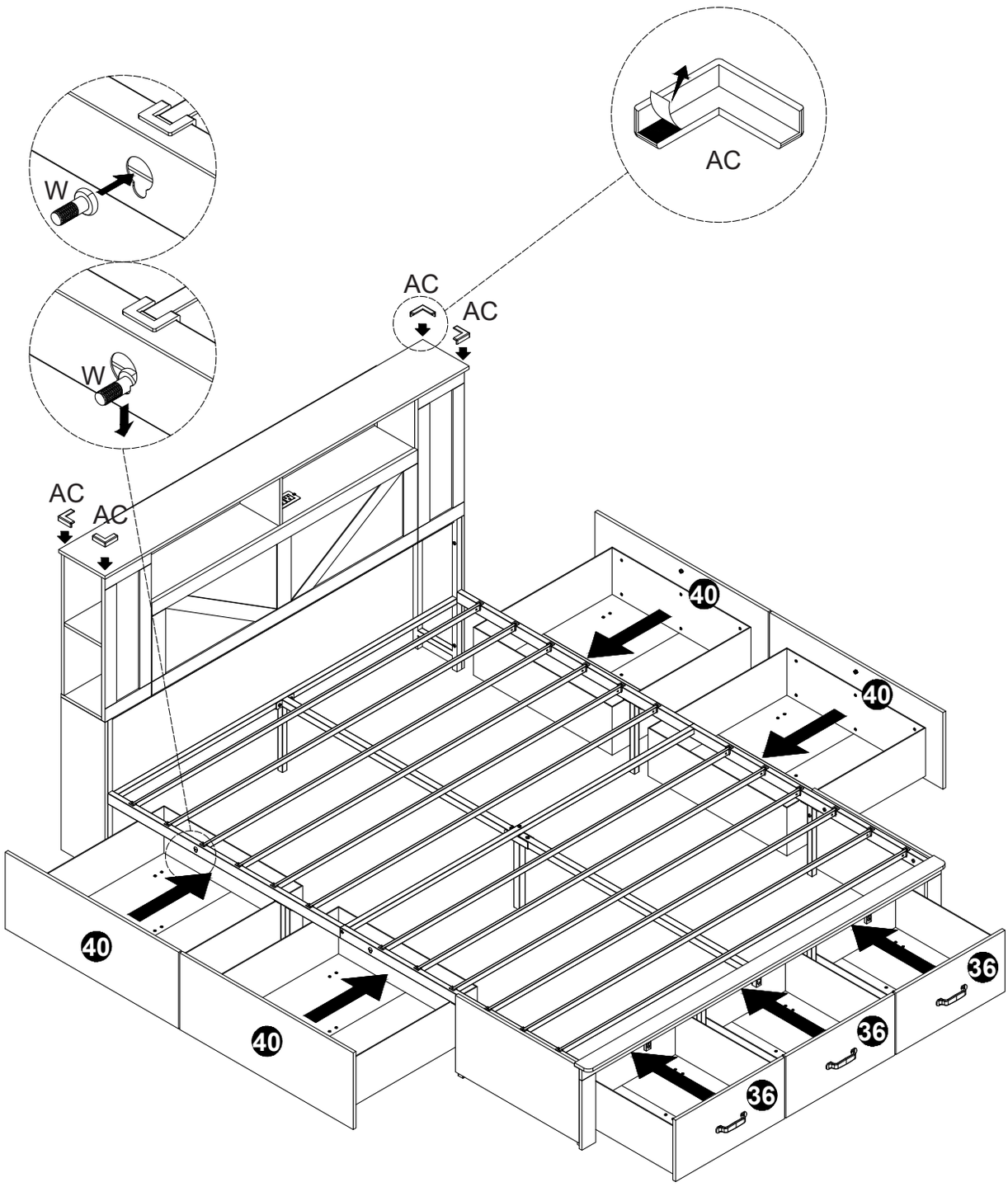

AC	4PCS

Using Cover-up Sticker (R)*18 to
cover the exposed part of Screws.

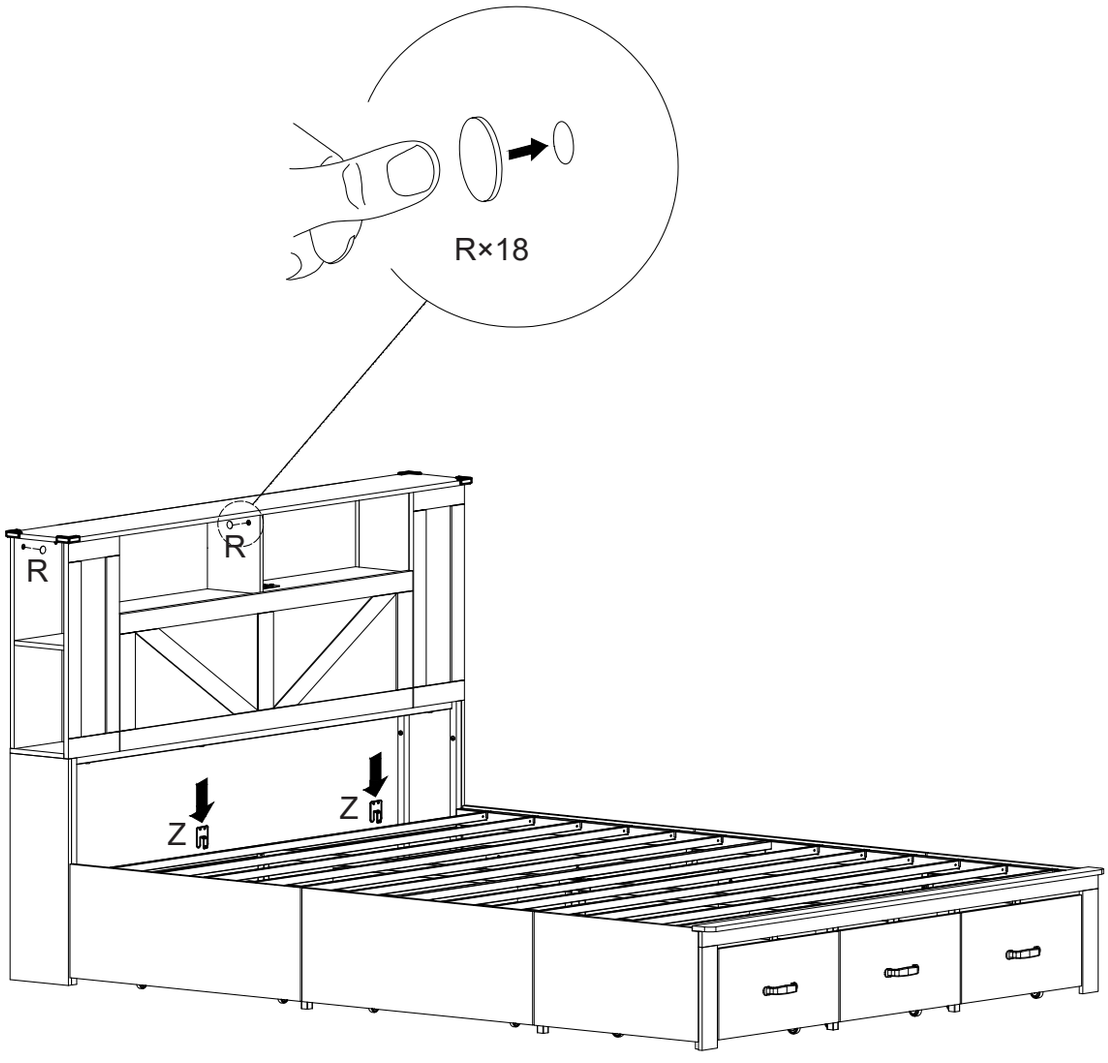

R	18PCS
Z	2PCS