INSTALLATION

Product Manual

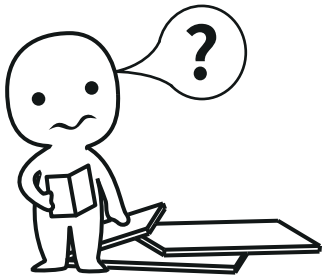

IMPORTANT INFORMATION!

please read the entire manual before starting to assemble and/or using this product.follow the manual thoroughly and keep it for further reference.

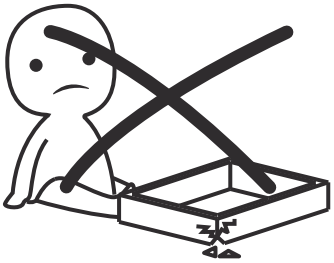

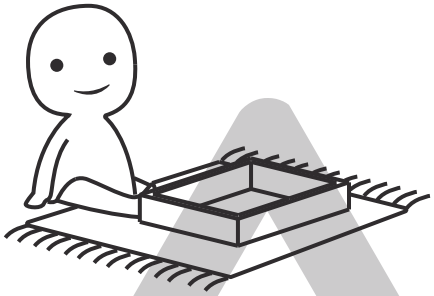

AVOID SCRATCHES!

In order to avoid scratching this furnuture should be assembled on a soft layer-could be a rug.

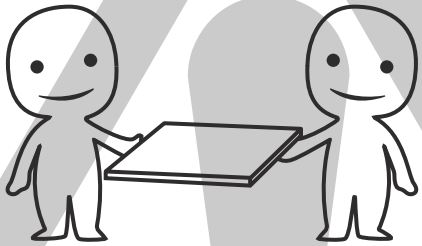

IMPROVE EFFICIENCY !

Try to find a partner to install with you, which can speed up the installation efficiency and shorten the time.

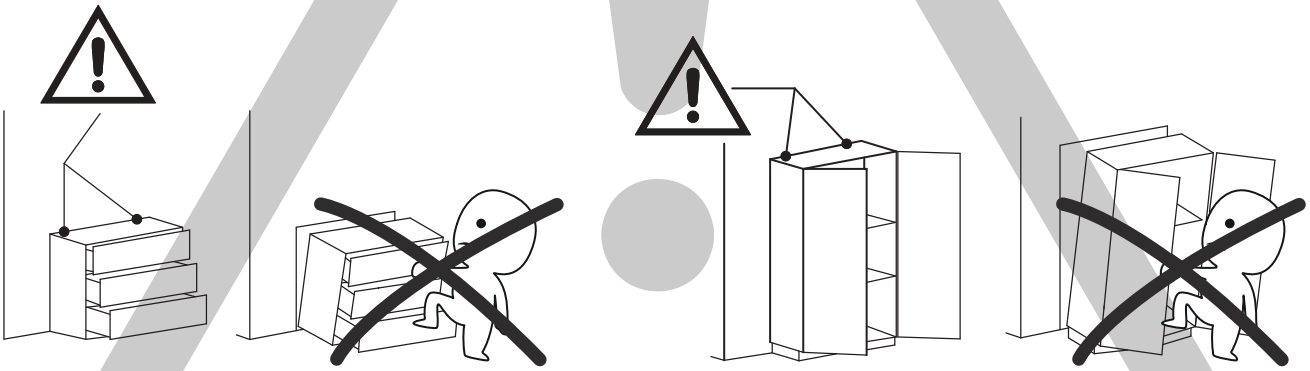

ANTI-TOPPLE WARNING !

Overturned furniture can cause serious or fatal crush injuries. To prevent tipping over, be sure to use the wall attachment, if not included with this product. Please purchase the wall attachment that fit your wall. If unsure, seek professional advice. Please read and follow each step of the instructions carefully.

IMPORTANT !

It is important that any product which is assembled using any kind of screw is re-tightened 2 weeks after assembly,and once every 3 months - in order to assure stability through-out the lifespan of the product.

For regular maintenance and cleaning of the product, for the frame, please use a rag dipped in neutral detergent to fully wipe it, and then dry it with a clean rag.For glass materials, wipe with a rag dampened with water glass cleaner, and then dry with a dry rag.

Do not use an electric screwdriver, and do not use too much force when installing, because the board is easy to break.

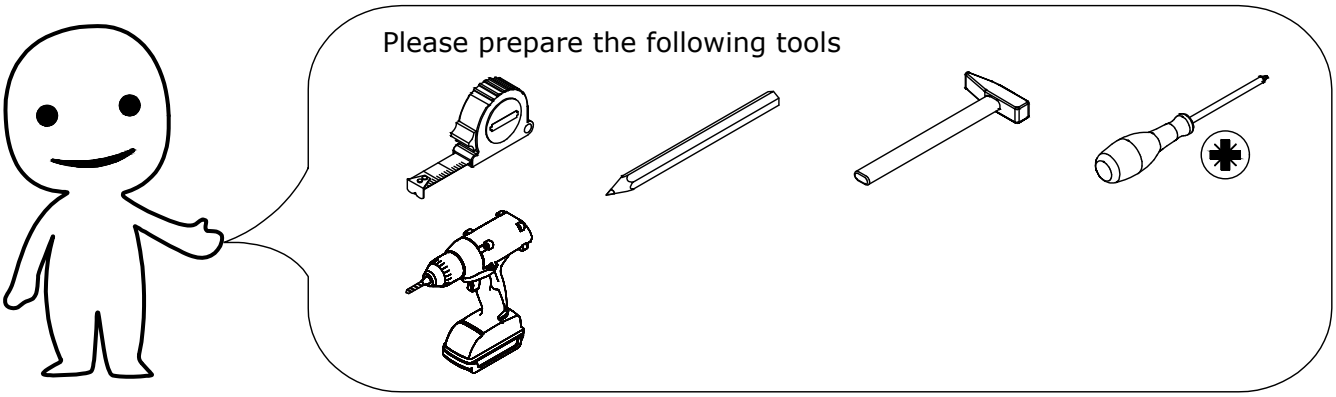

When installing, please carefully confirm whether each screw corresponds to the manual, accessories with similar shapes can be distinguished by size

A x 117	B x 117	C x 117	D x 88	E x 4
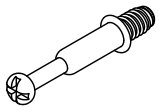 CRA0635B		CRB1595A	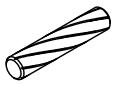 CRF0630A	

F x 54	G x 3	H x 8	J x 19	K x 4
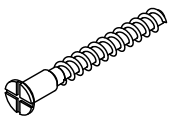 CRC0540A		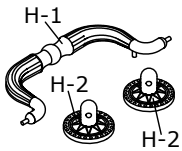	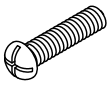 CRE0418A	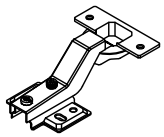 DGA861C

L x 9	M x 36	N x 136	P x 4	Q x 2
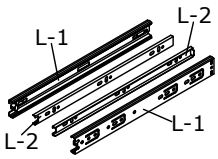 #3508 14''	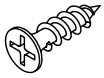 CRD3512A	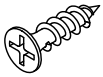 CRD3514A	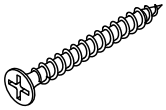 CRD3535A	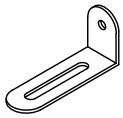

R x 2	S x 1	T x 32	U x 32	V x 3
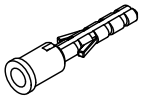	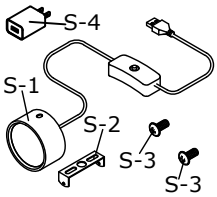	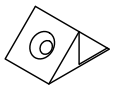	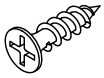 CRD0314A	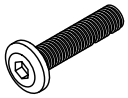 CRG0635A

W x 4	X x 8	Y x 2	Z x 1	AA x 10
CRG0612A	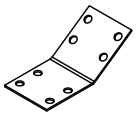			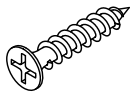 CRD3520A

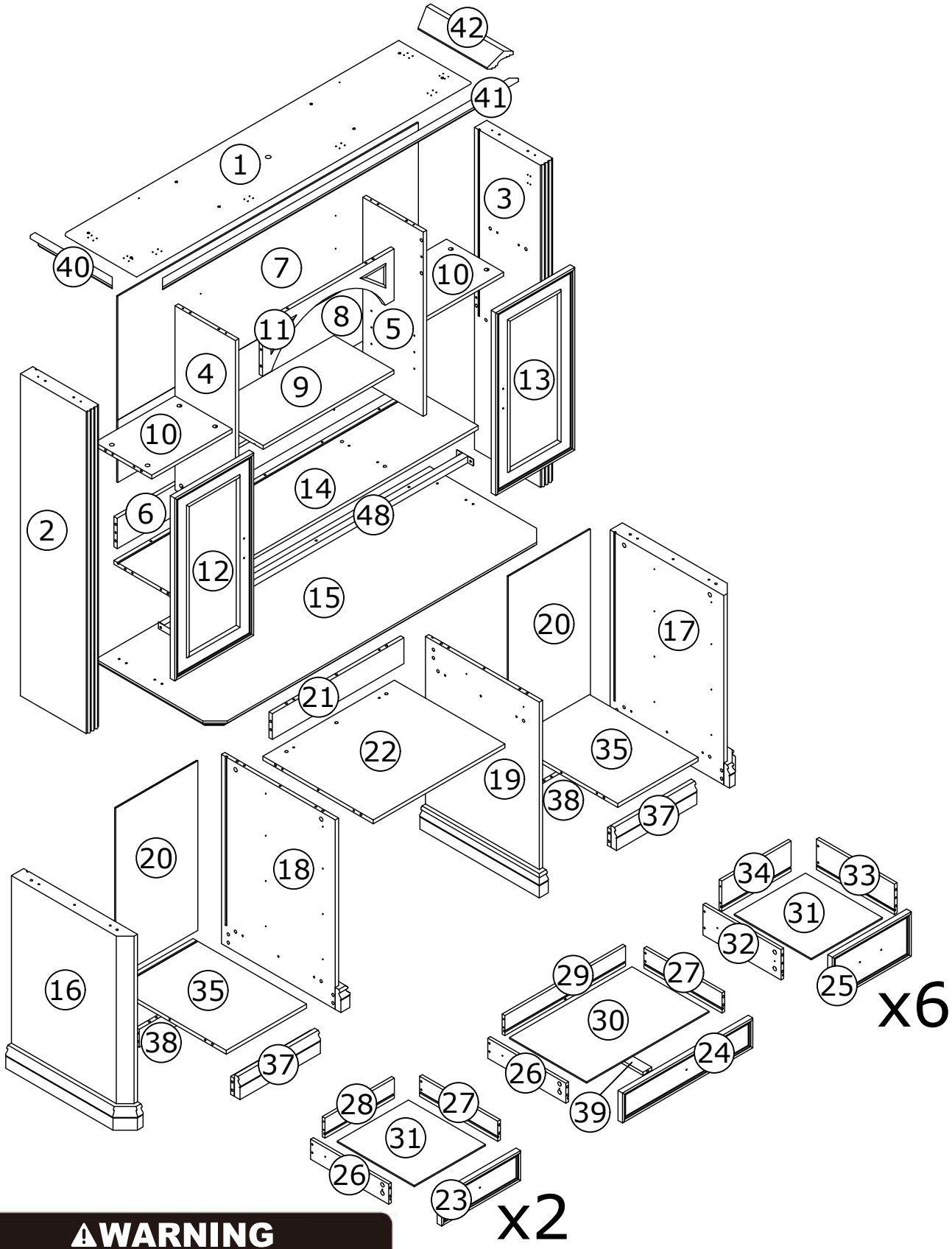

⚠WARNING

Children have died from furniture tipover.To reduce the risk of furniture tipover:

- ALWAYS install Anti-tip device provided.
- NEVER put a TV on this product.
- NEVER allow children to stand,climb or hang on drawers,doors,or shelves.
- NEVER open more than one drawer at a time.
- Place heaviest items in the lowest drawers.

This is a permanent label.
Do not remove!

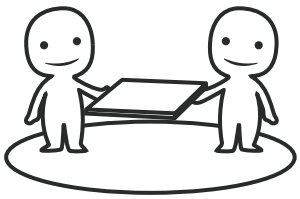

ASSEMBLED BY 2 ADULTS

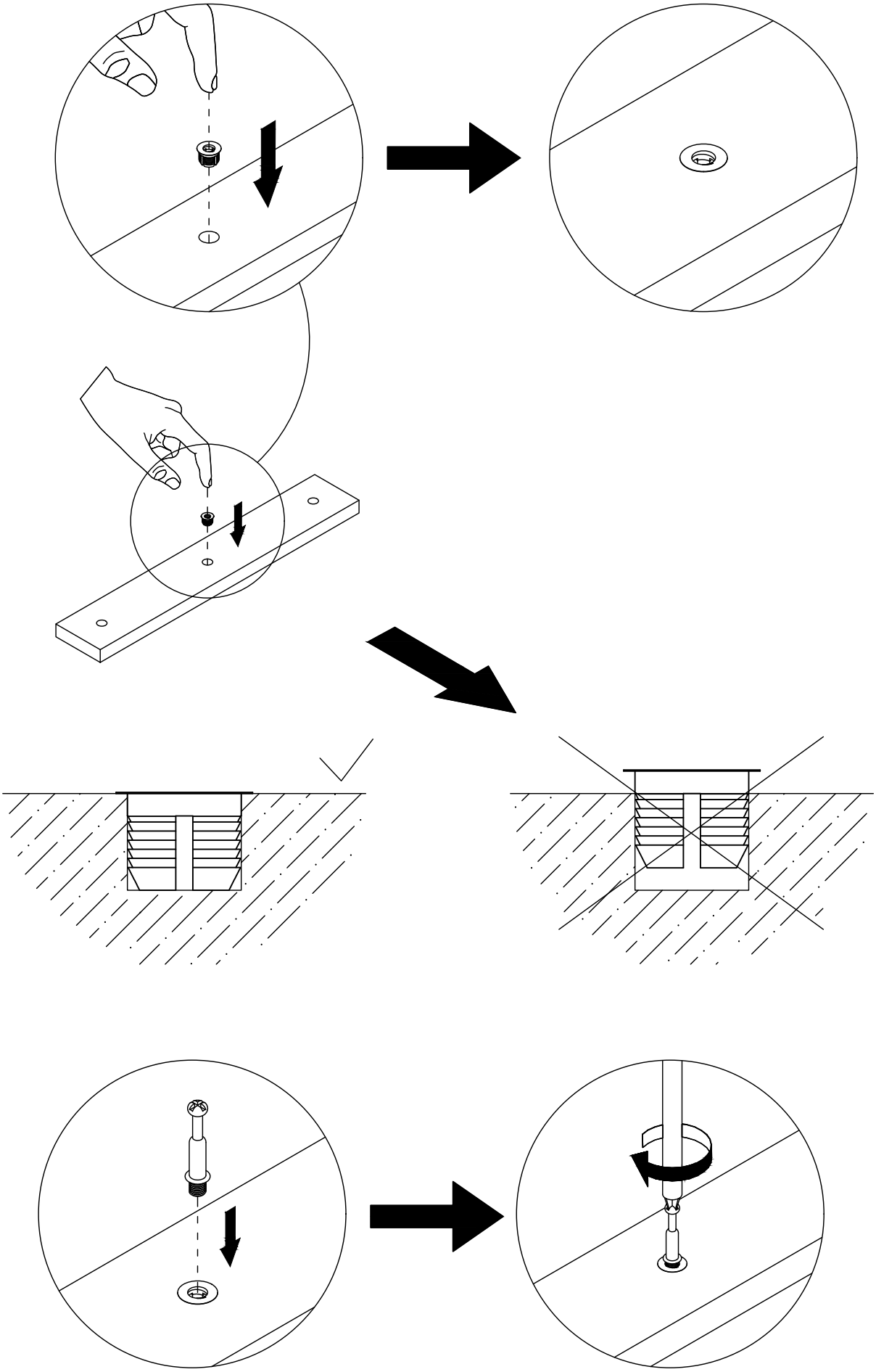

Slides Must Be Separated Before Assembly.
After Separated, Set Aside Until Needed for Assembly.

Las diapositivas deben separarse antes del montaje.
Después de la separación, déjelo a un lado hasta que sea necesario.

Les glissières doivent être séparées avant l'assemblage.
Après la séparation, mettez de côté jusqu'au moment de l'assemblage.

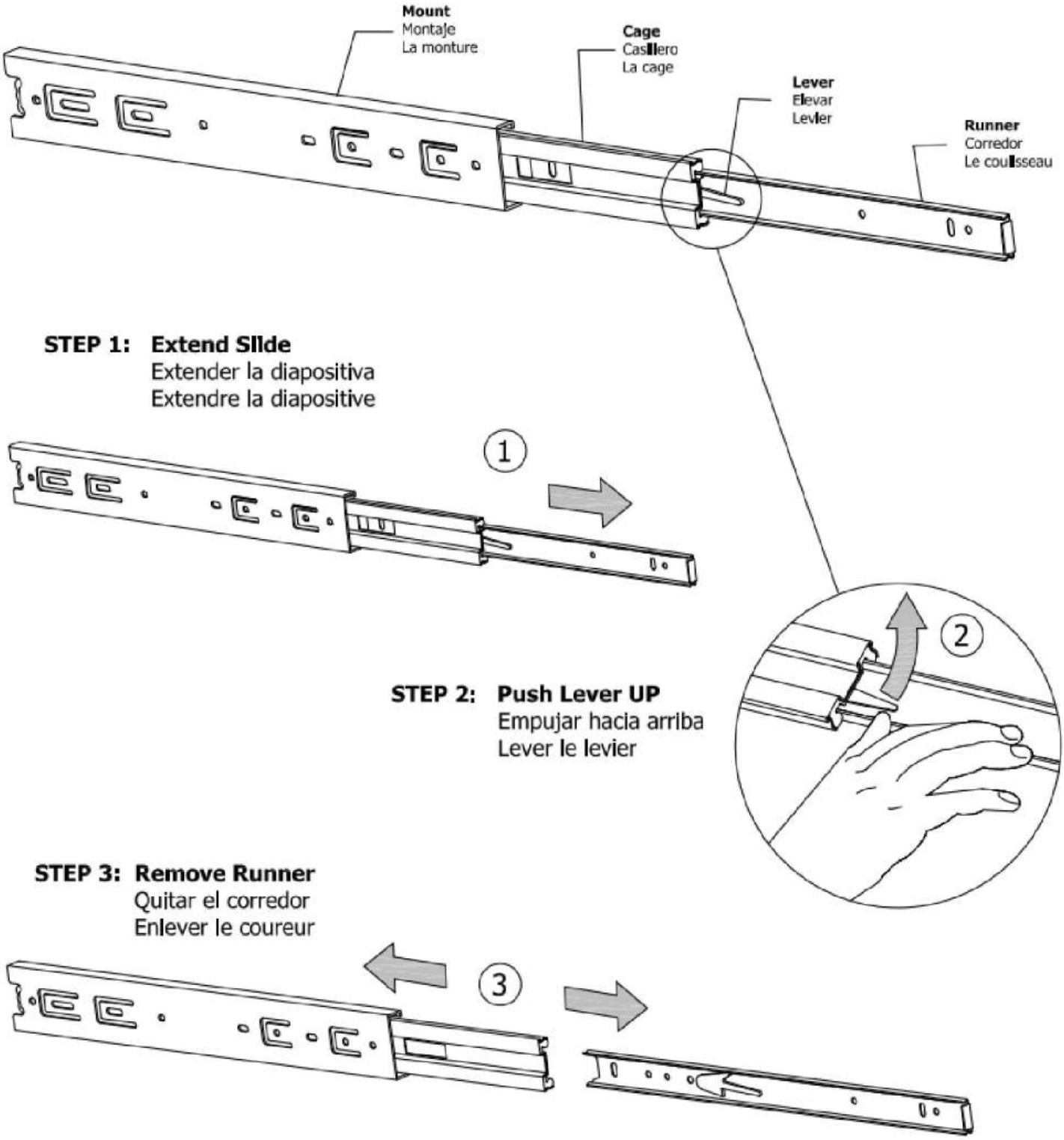

1

A x 2	B x 4	
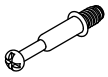 CRA0635B		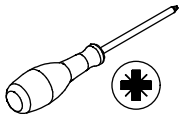

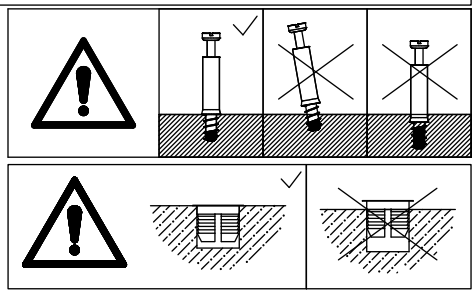

First install plug (B) onto panel 4, then screw the self-tapping rod (A) into.

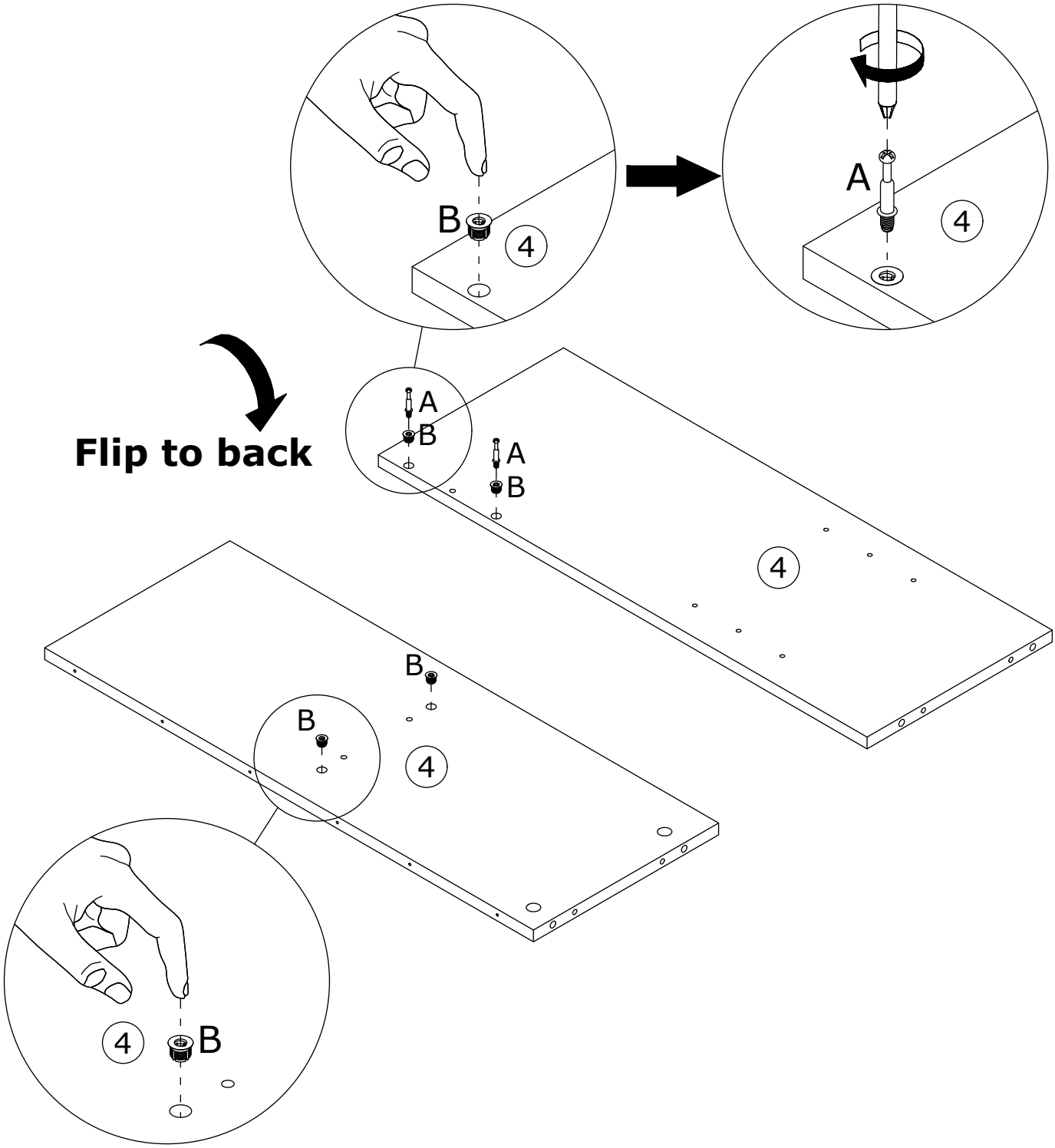

2

A x 2	B x 4	
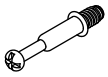 CRA0635B		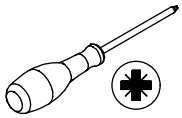

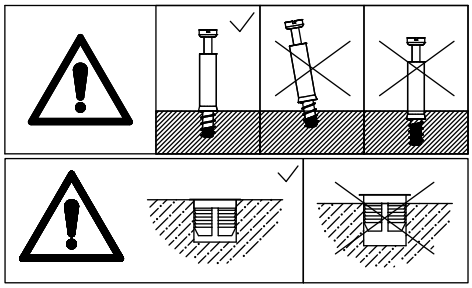

First install plug (B) onto panel 5, then screw the self-tapping rod (A) into.

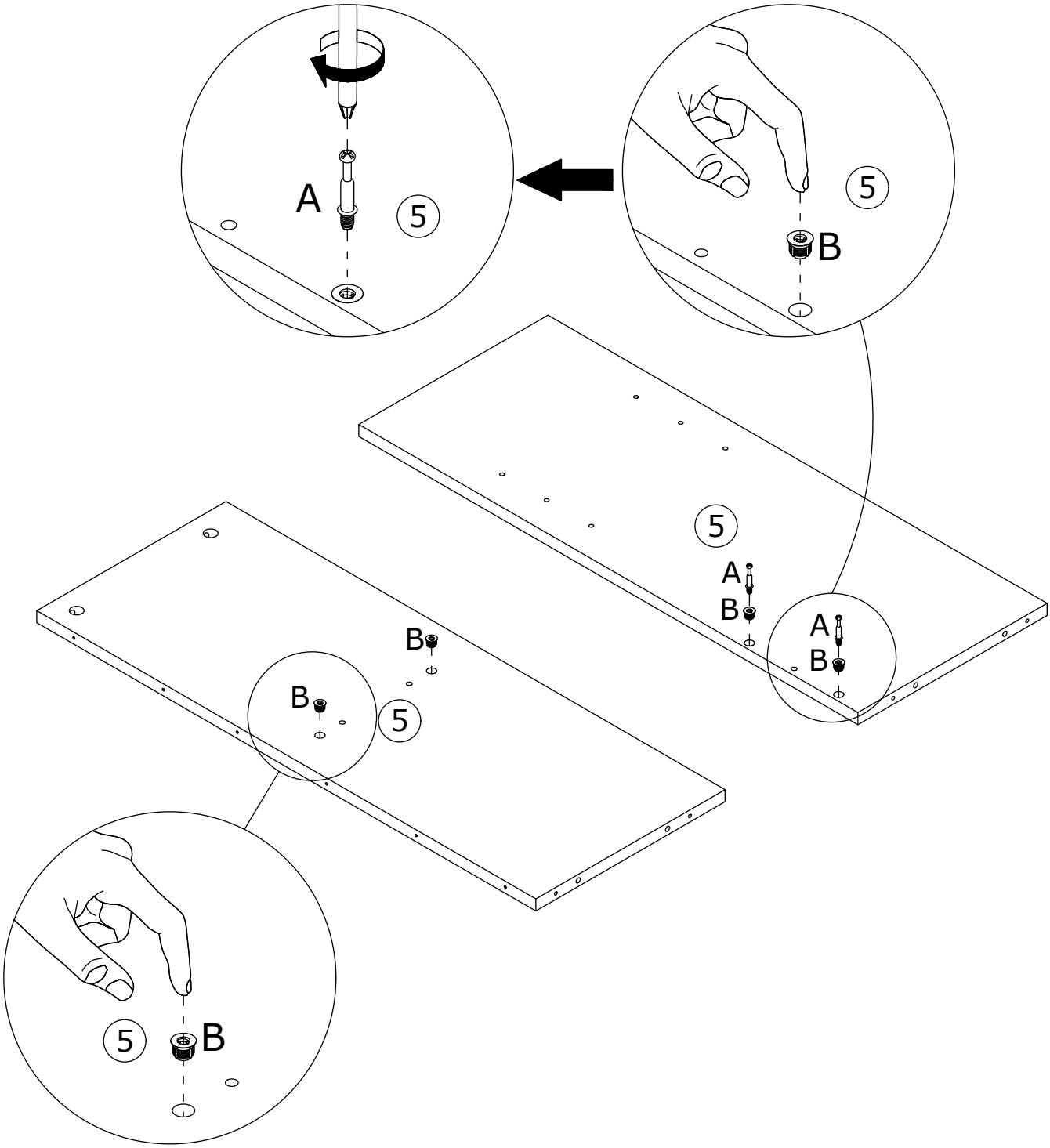

3

C x 4	D x 2	
		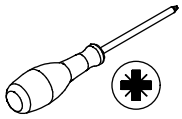
CRB1595A	CRF0630A	

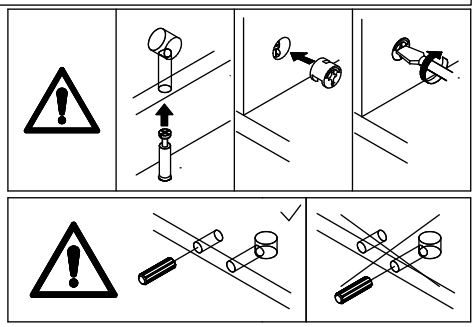

Attach panels 4 and 5 to panel 11 using dowels (D), then put the eccentric pulley (C) and tighten it by turning clockwise.

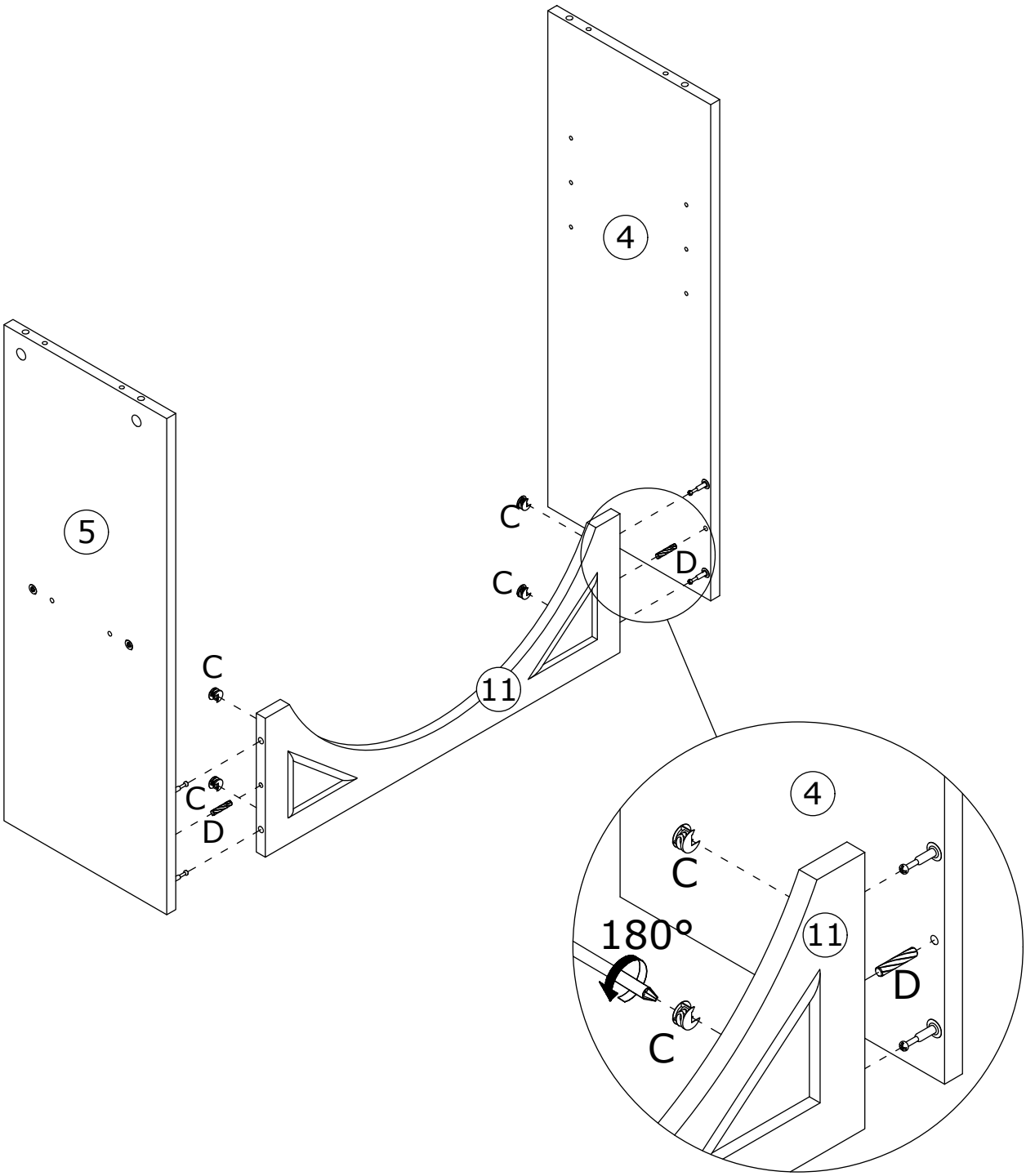

4

A x 4	B x 4	F x 5	
CRA0635B		CRC0540A	

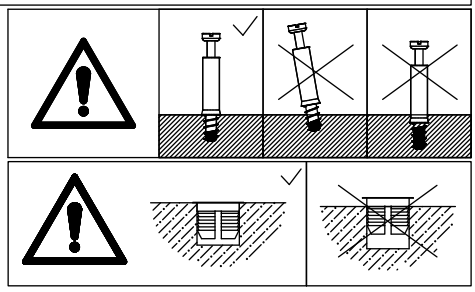

First install plug (B) onto panel 14, then screw the self-tapping rod (A) into.
Connect panel 14 to panel 6 using screw (F).

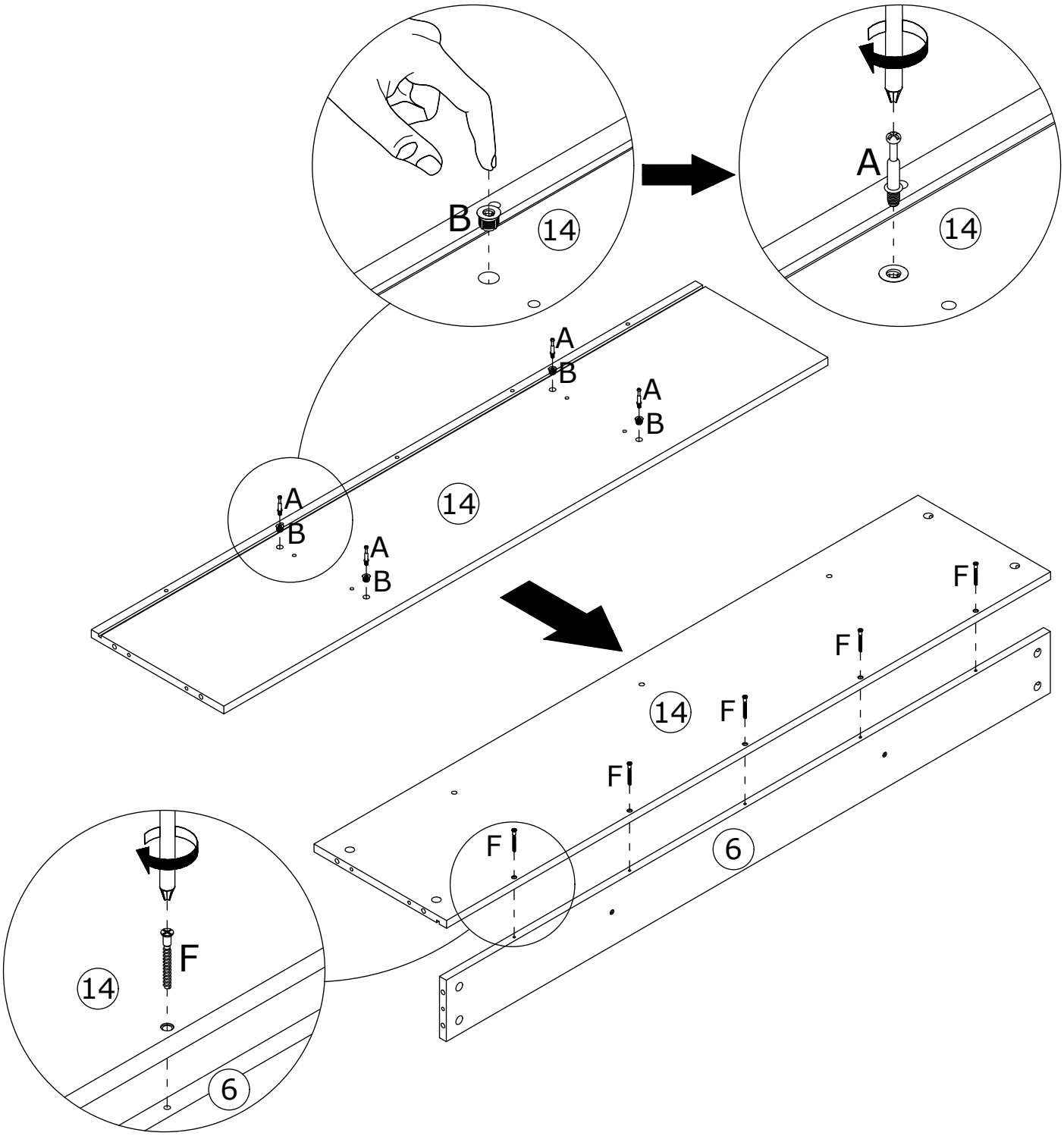

5

C x 4	D x 4	
		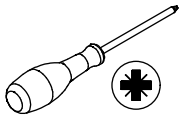
CRB1595A	CRF0630A	

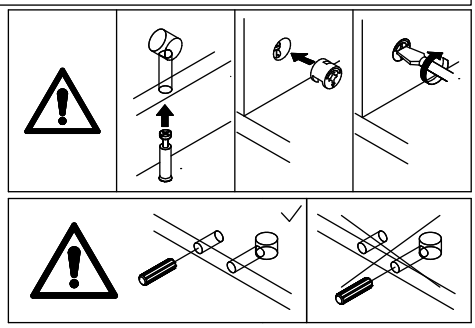

Connect panel 14 to panels 4 and 5 using dowels (D), then put the eccentric pulley (C) and tighten it by turning clockwise.

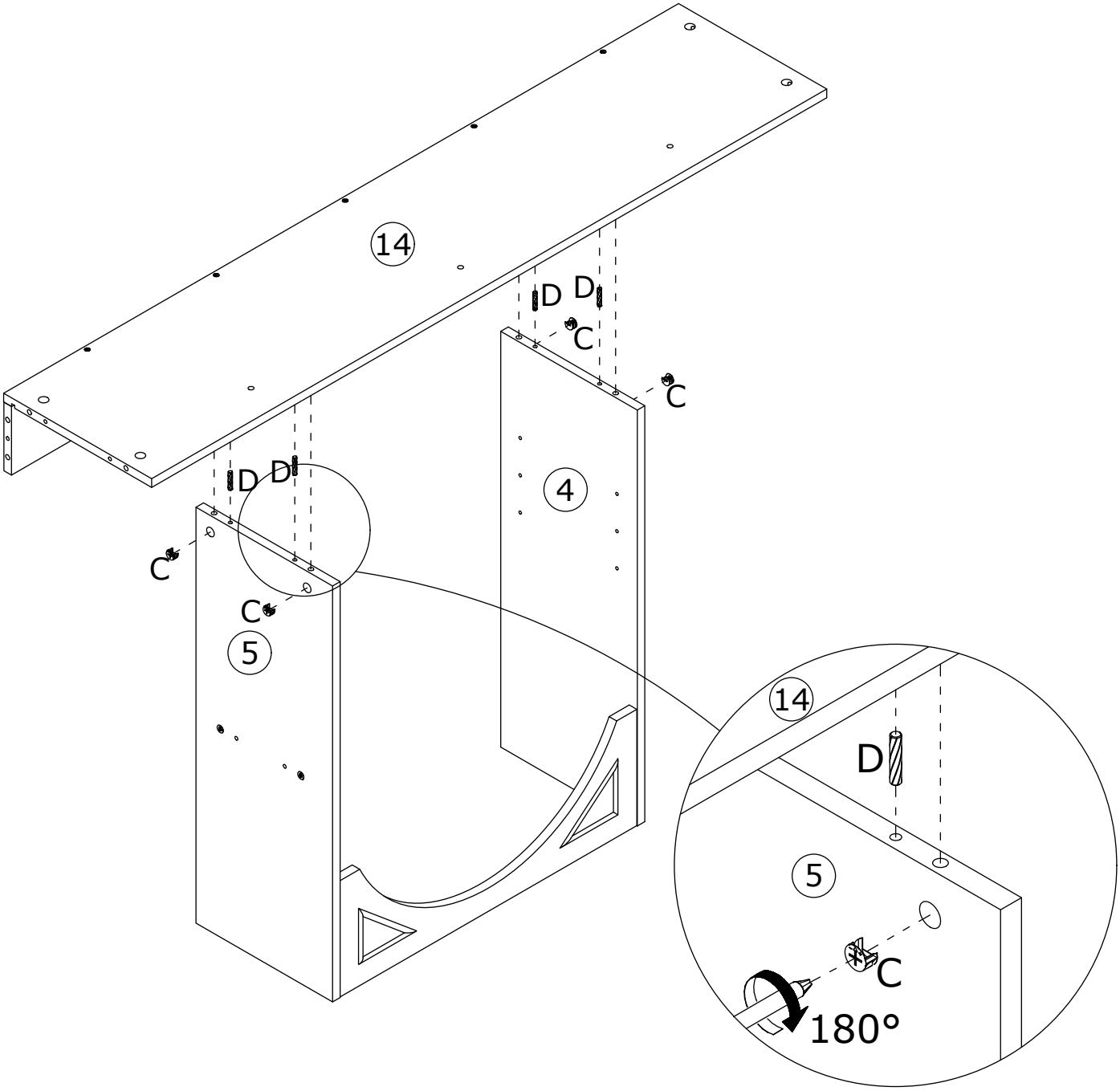

6

A x 12	B x 12	
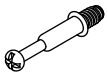 CRA0635B		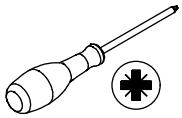

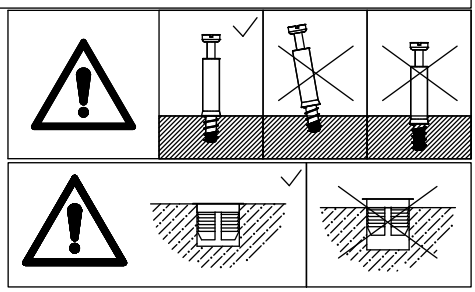

First install plug (B) onto panel 2 and panel 3, then screw the self-tapping rod (A) into.

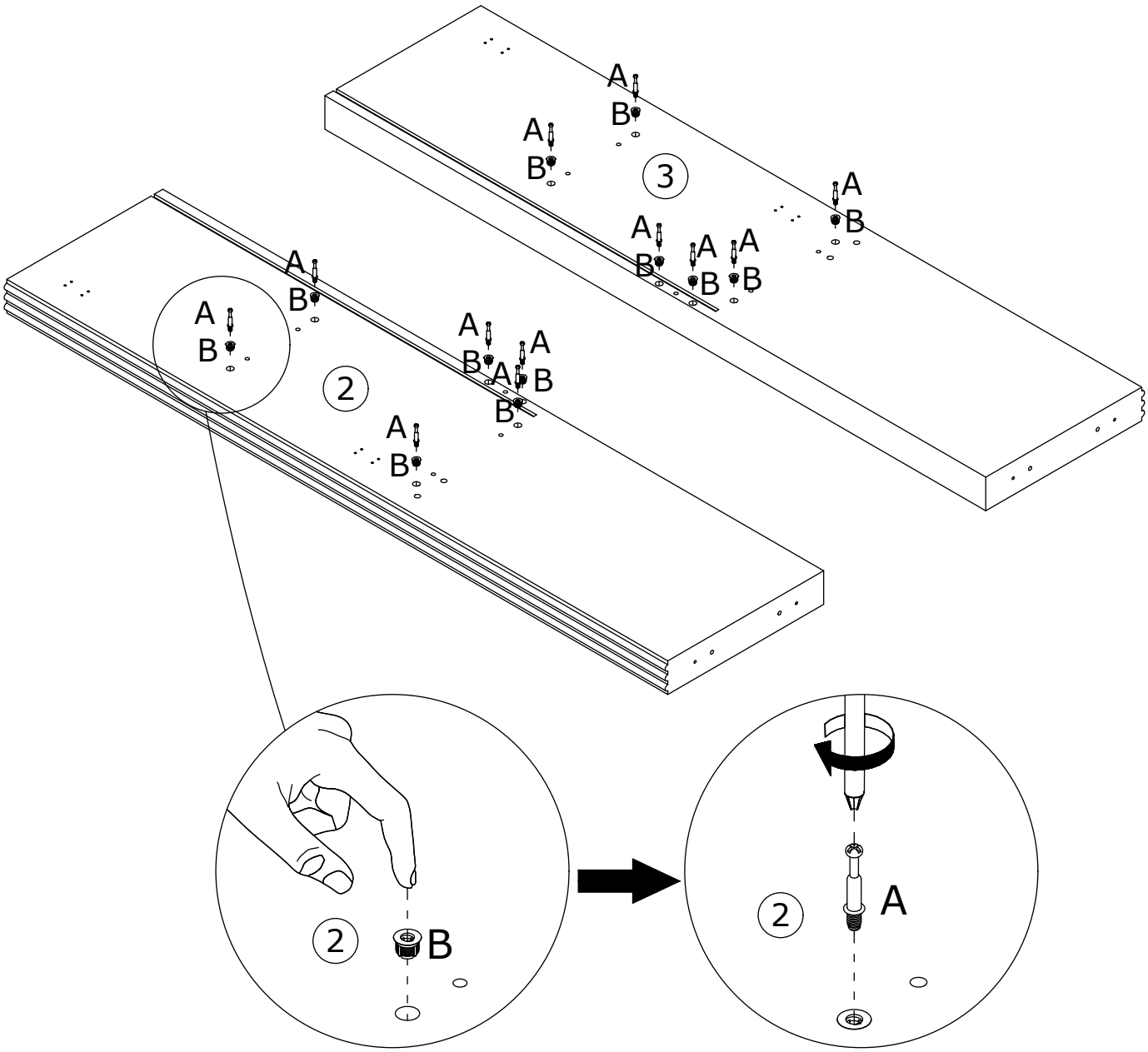

7

A x 2

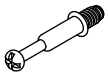

CRA0635B

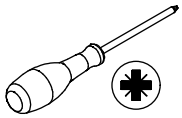

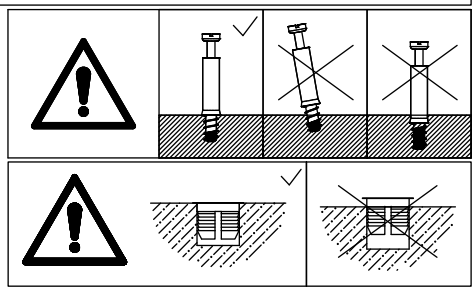

Screw the self-tapping rod (A) into panel 4.

Place a support pad thicker than 0.87 inches at the bottom.

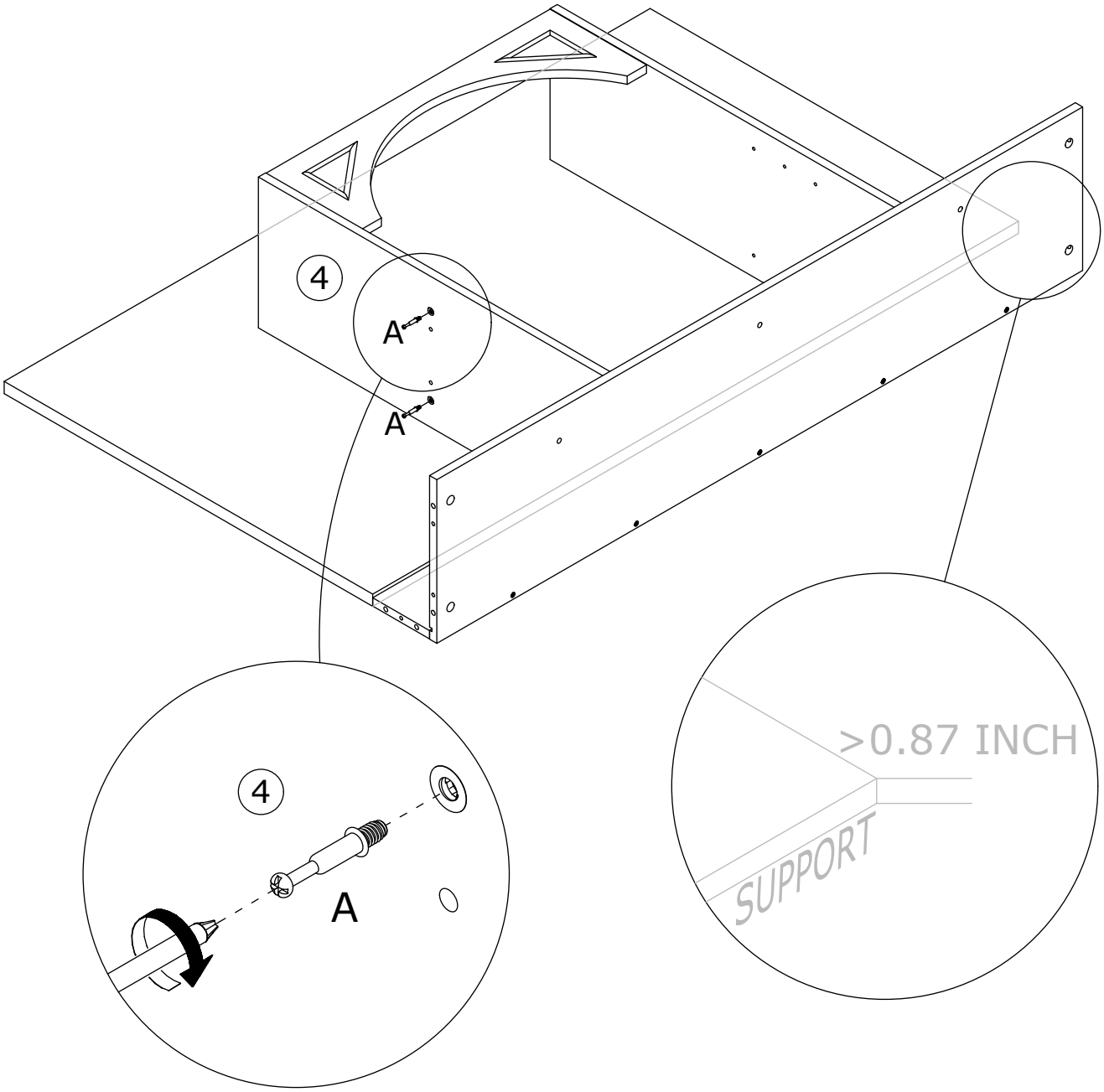

8

C x 2	D x 2	
		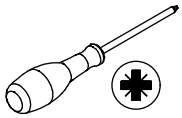
CRB1595A	CRF0630A	

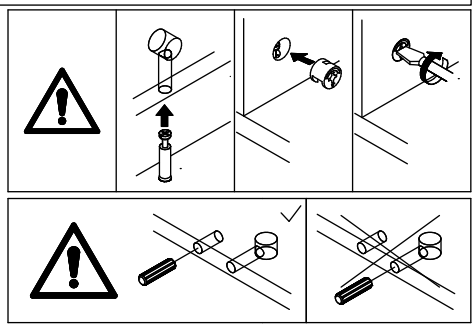

Connect panel 10 to panel 4 using dowels (D), then put the eccentric wheel (C) and tighten by turning clockwise.

Place a support pad thicker than 0.87 inches at the bottom.

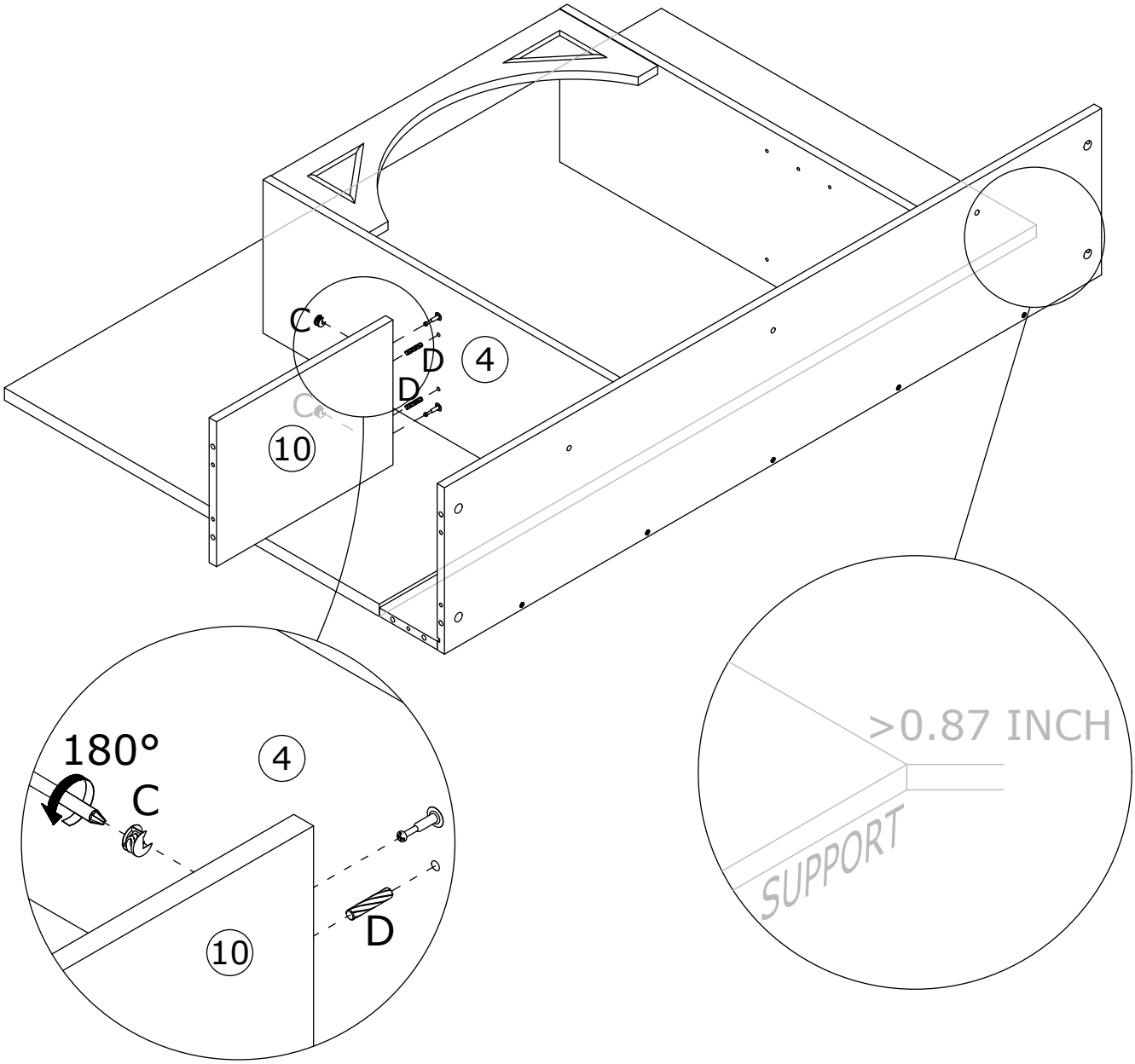

9

C x 4	D x 5	
		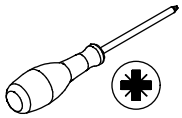
CRB1595A	CRF0630A	

Connect panel 2 to panels 6, 10, and 14 using dowels (D), then put the eccentric wheel (C) and tighten by turning clockwise.
Place a support pad thicker than 0.87 inches at the bottom.

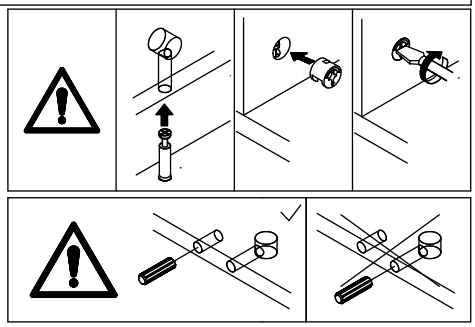

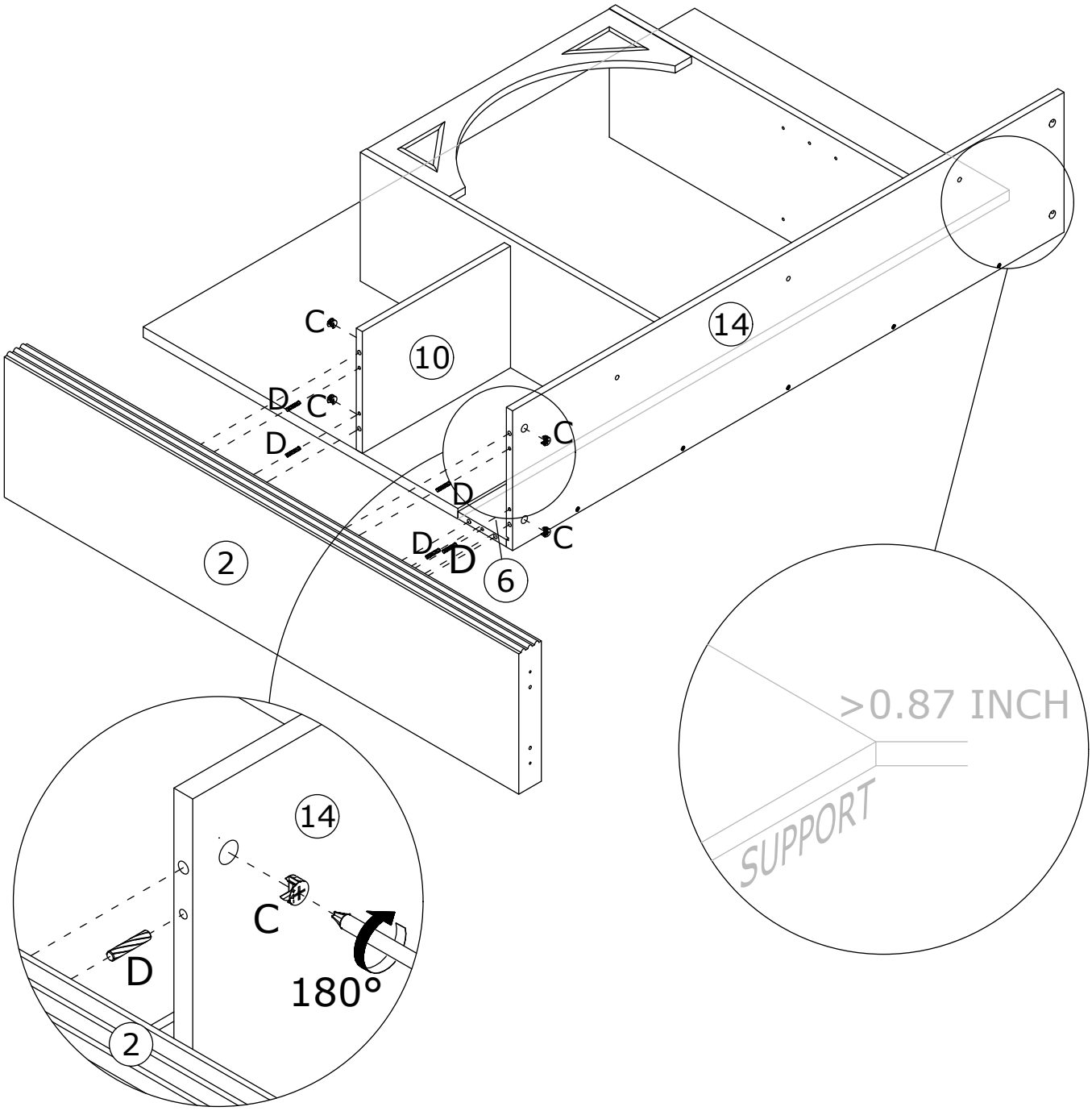

10

A x 2

CRA0635B

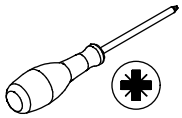

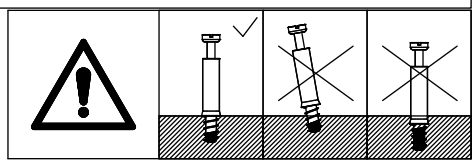

Screw the self-tapping rod (A) into panel 5.

Place a support pad thicker than 0.87 inches at the bottom.

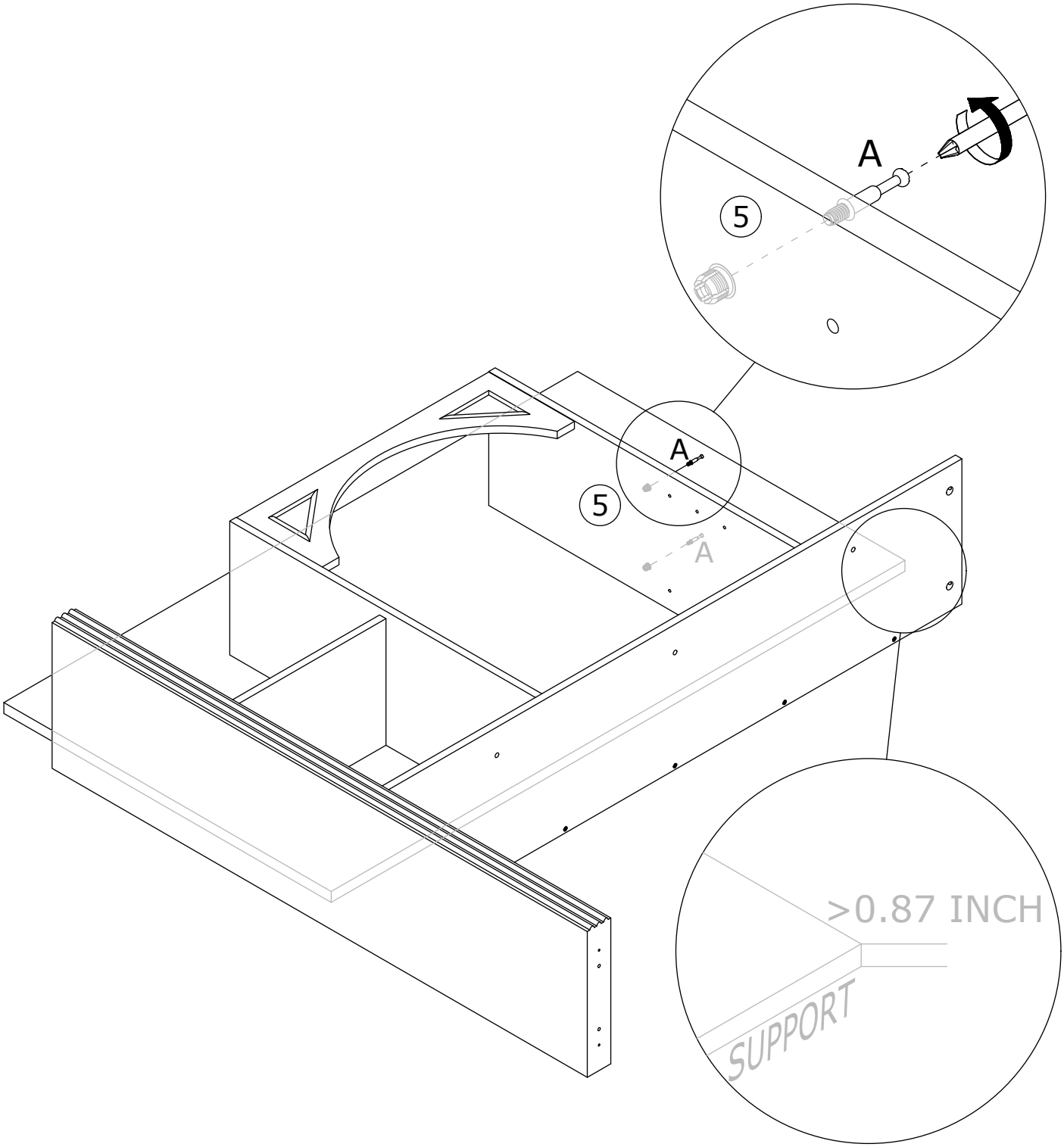

11

C x 2	D x 2	
CRB1595A	CRF0630A	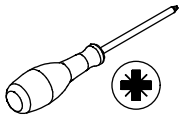

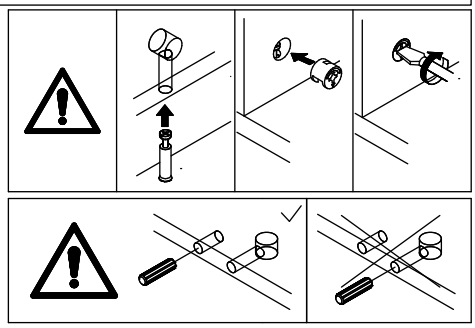

Connect panel 10 to panel 5 using dowels (D), then put the eccentric wheel (C) and tighten by turning clockwise.

Place a support pad thicker than 0.87 inches at the bottom.

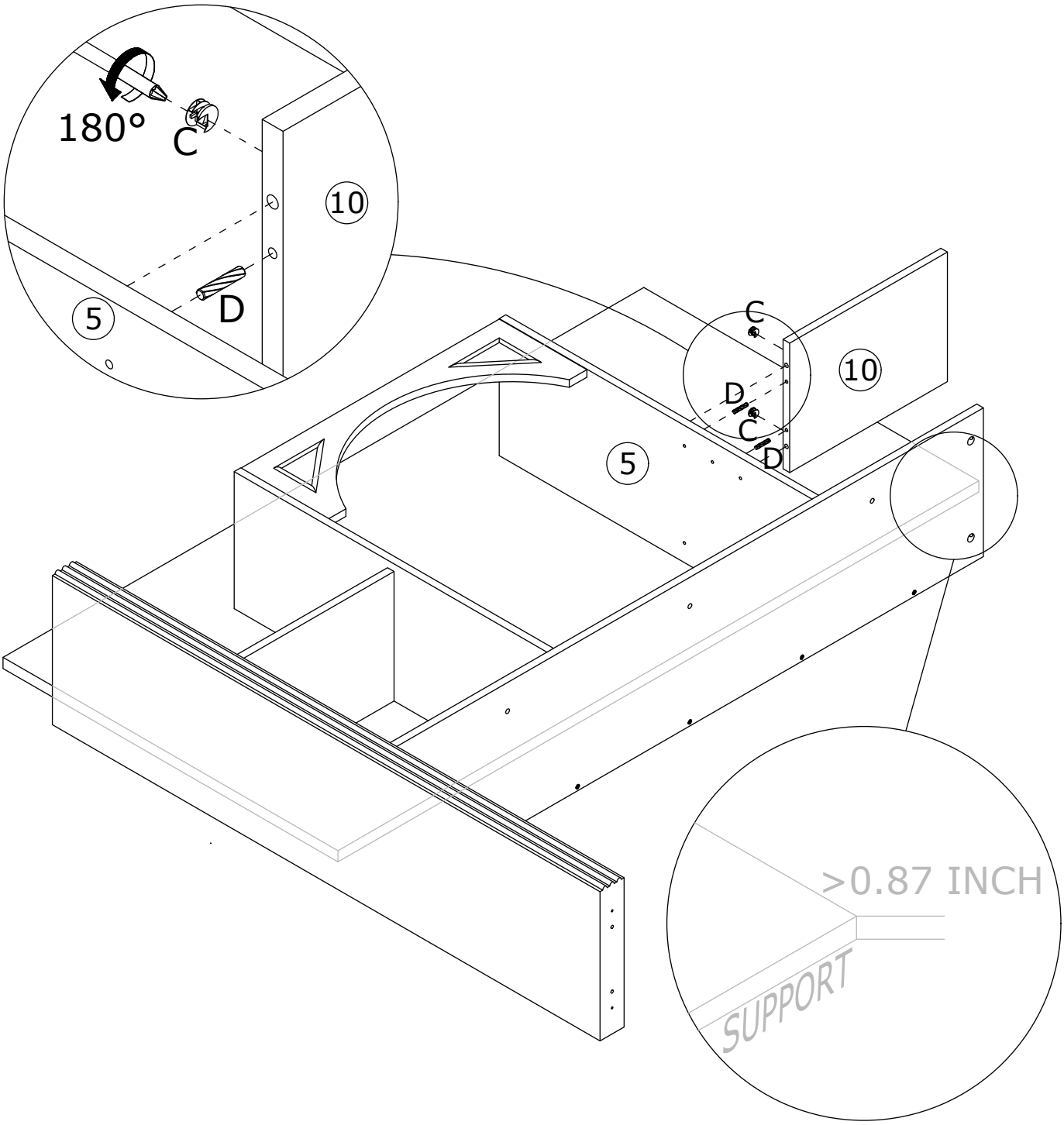

12

C x 4	D x 5	
		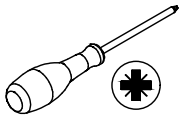
CRB1595A	CRF0630A	

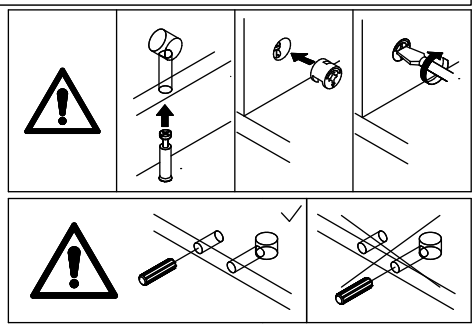

Connect panel 3 to panels 6, 10, and 14 using dowels (D), then put the eccentric wheel (C) and tighten by turning clockwise.
Place a support pad thicker than 0.87 inches at the bottom.

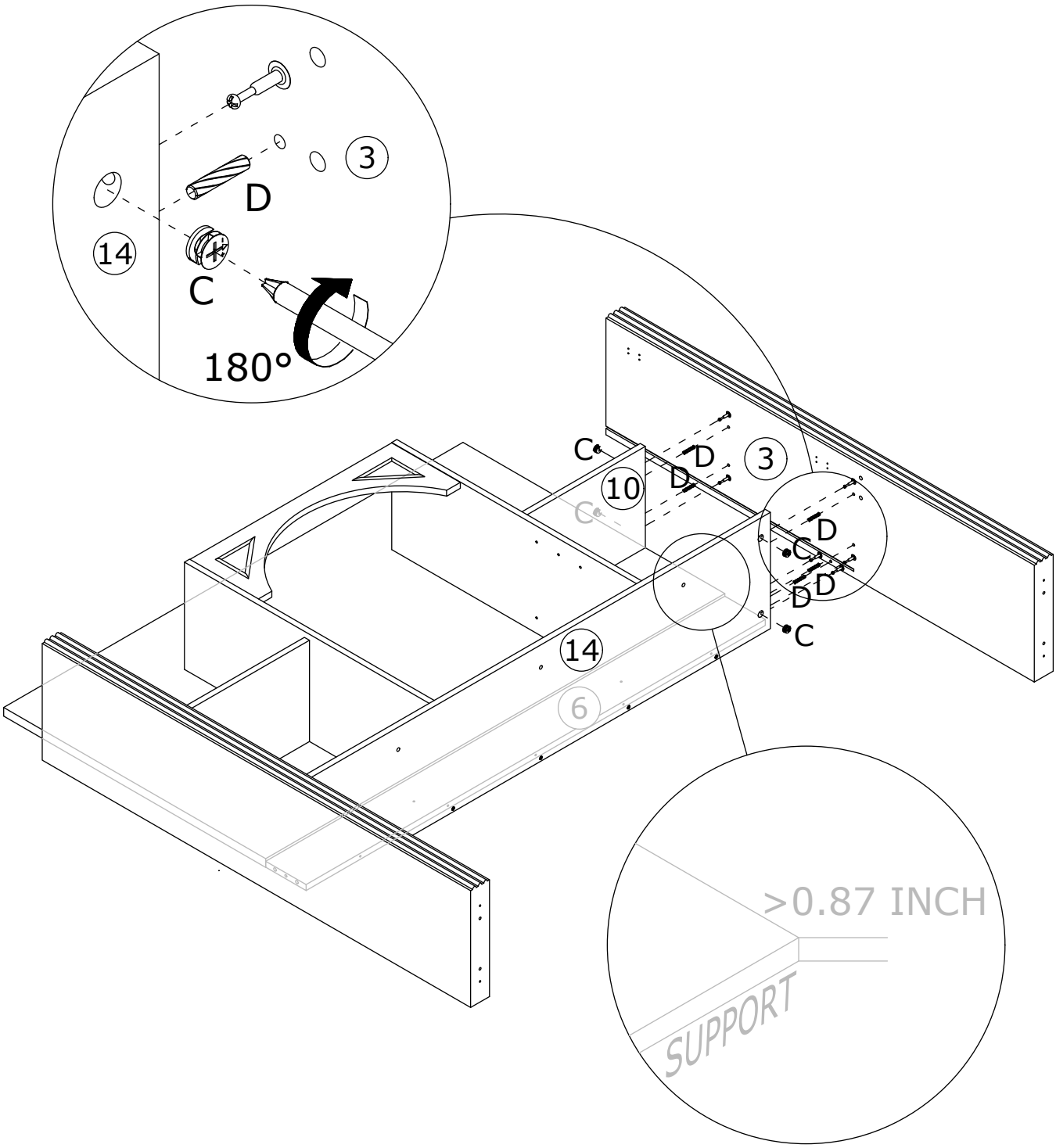

13

C x 4

CRB1595A

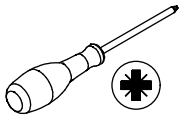

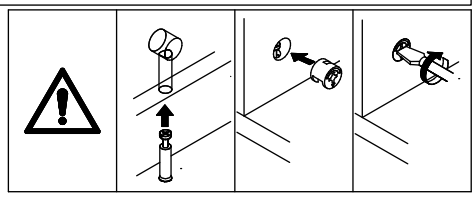

Put the eccentric wheel (C) into panel 6 and tighten it by turning clockwise.

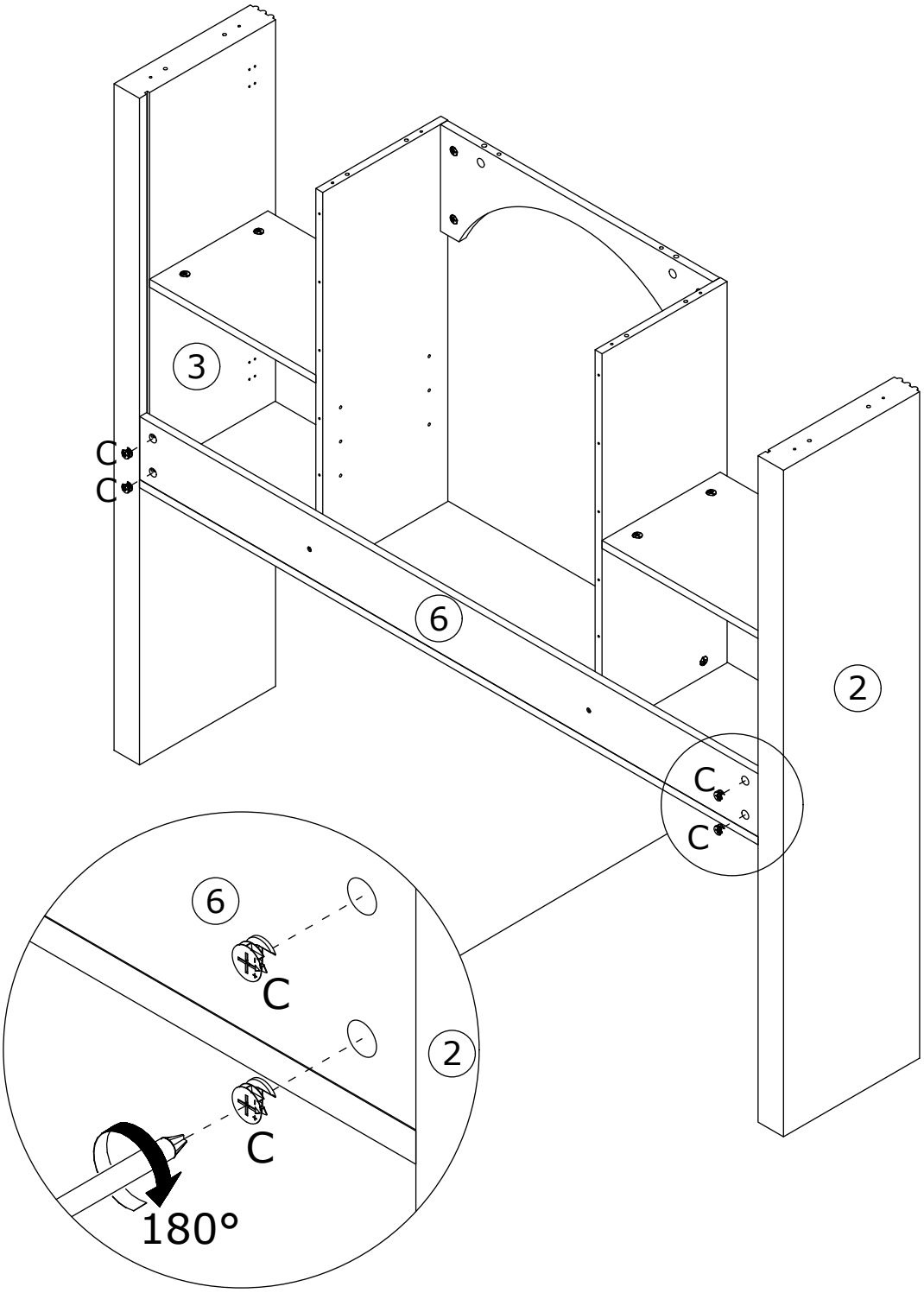

14

Insert panels 7 and 8 into the available slots.

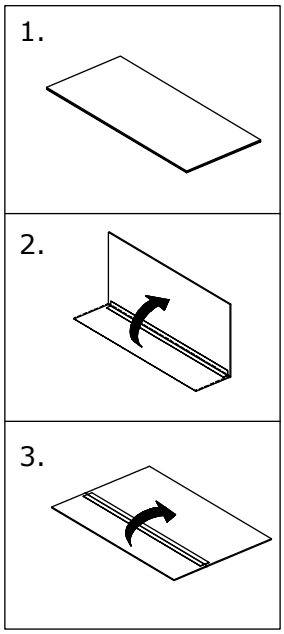

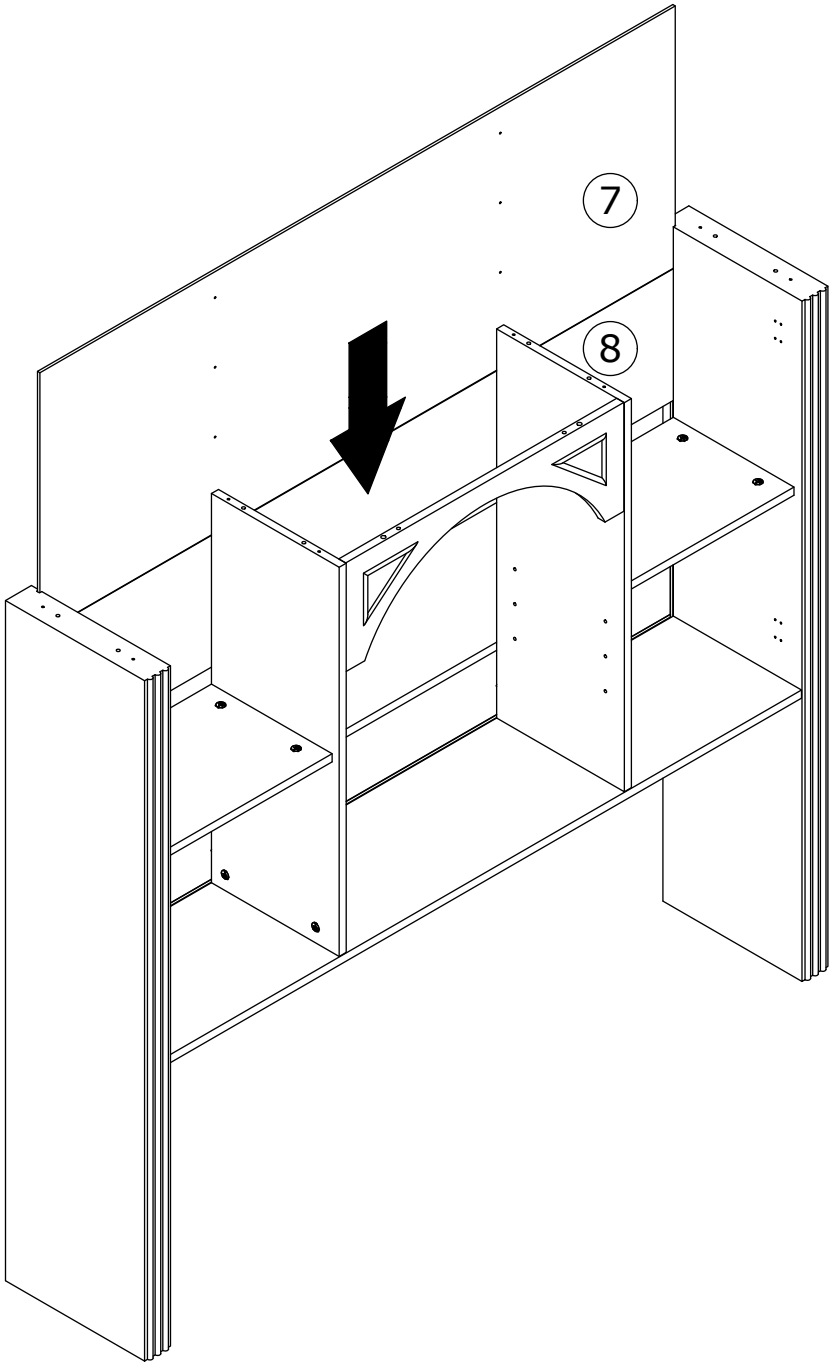

15

A x 2	B x 2	
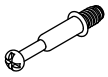 CRA0635B		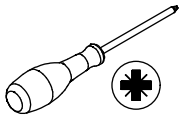

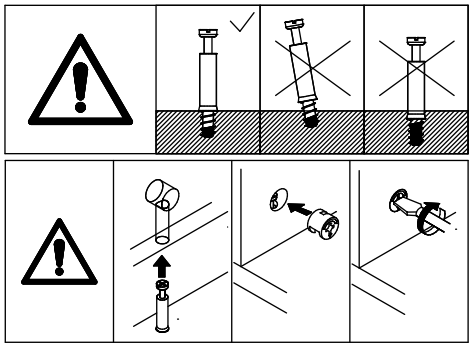

First install plug (B) onto panel 1, then screw the self-tapping rod (A) into.

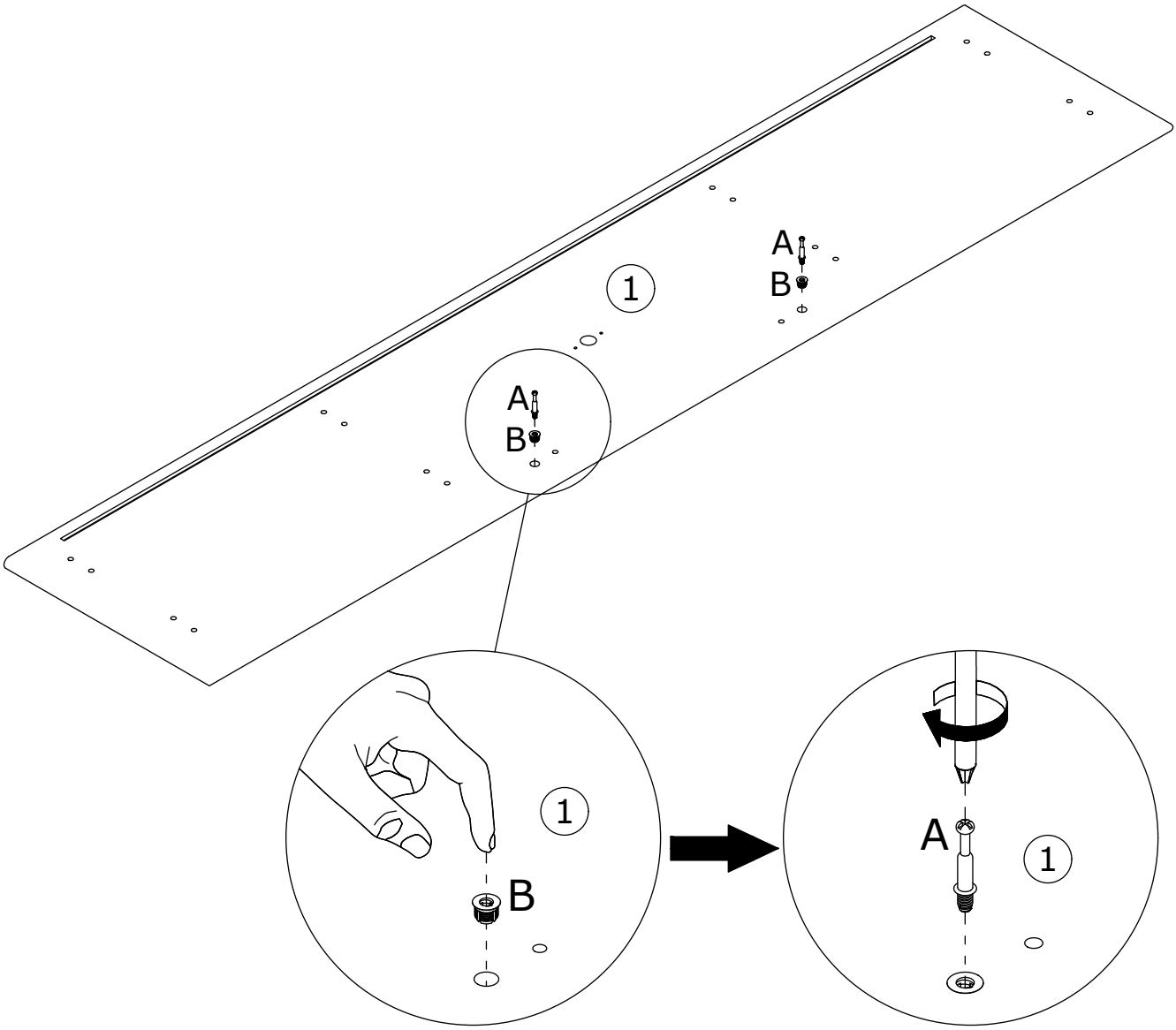

16

C x 2	D x 10	F x 8	
		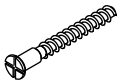	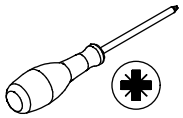
CRB1595A	CRF0630A	CRC0540A	

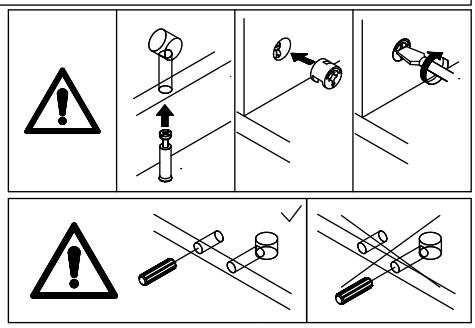

Connect panel 1 to panels 2, 3, 4, and 5 using dowels (D), then secure with screws (F).
Connect panel 1 to panel 11 using dowels (D), then put the eccentric wheel (C) and tighten by turning clockwise.

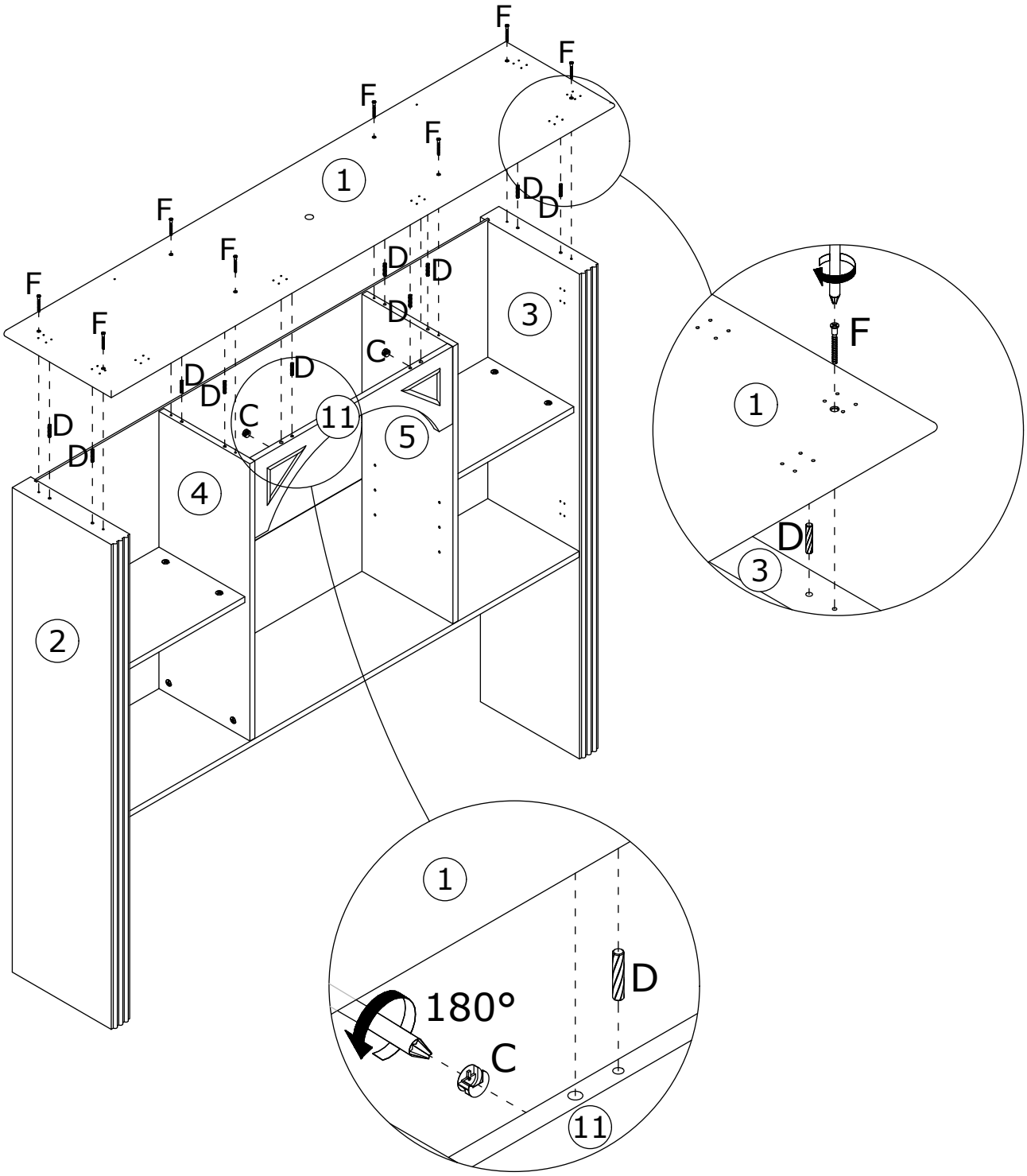

17

P x 2	AA x 10	
CRD3535A	CRD3520A	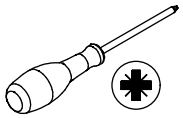

Secure panels 7 and 8 to panels 4 and 5 using screws (AA).
Secure panels 6 and 8 to panels 4 and 5 using screws (P).

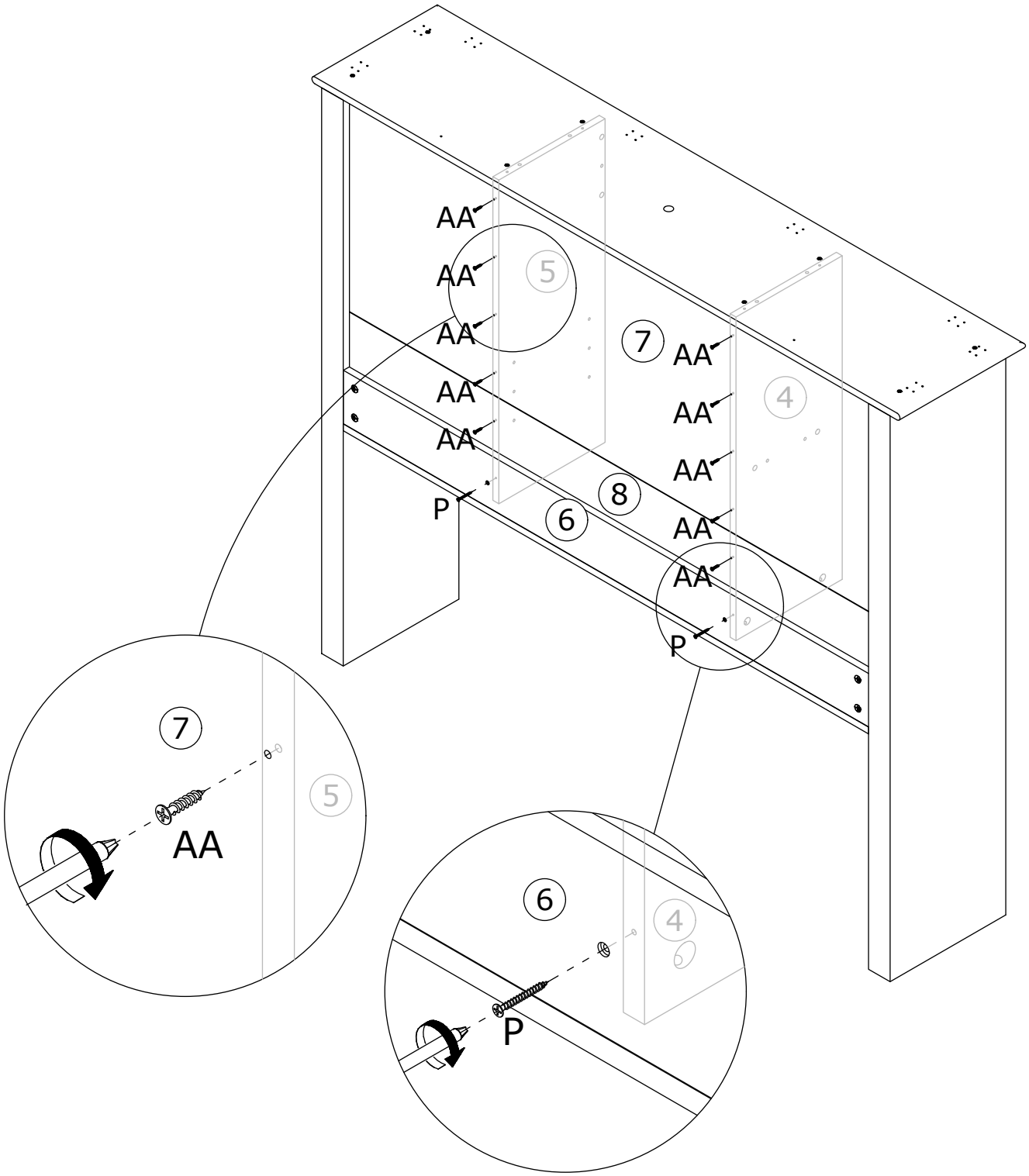

18

V x 3	Z x 1	
CRG0635A		

Attach pipe (48) to panel 14 using screws (V).

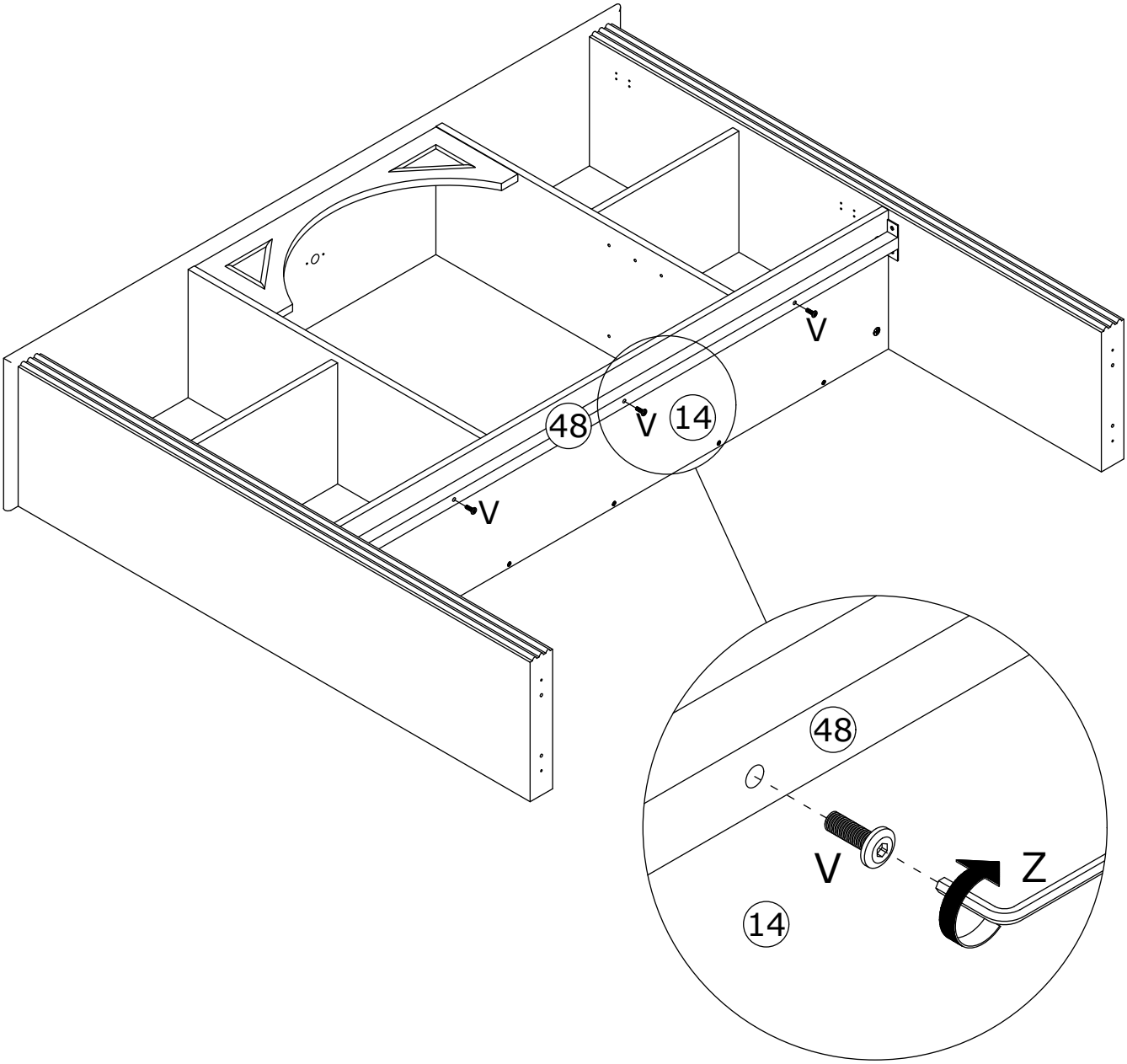

19

W x 4	Z x 1	
CRG0612A		

Attach component (48) to panels 2 and 3 using screws (W).

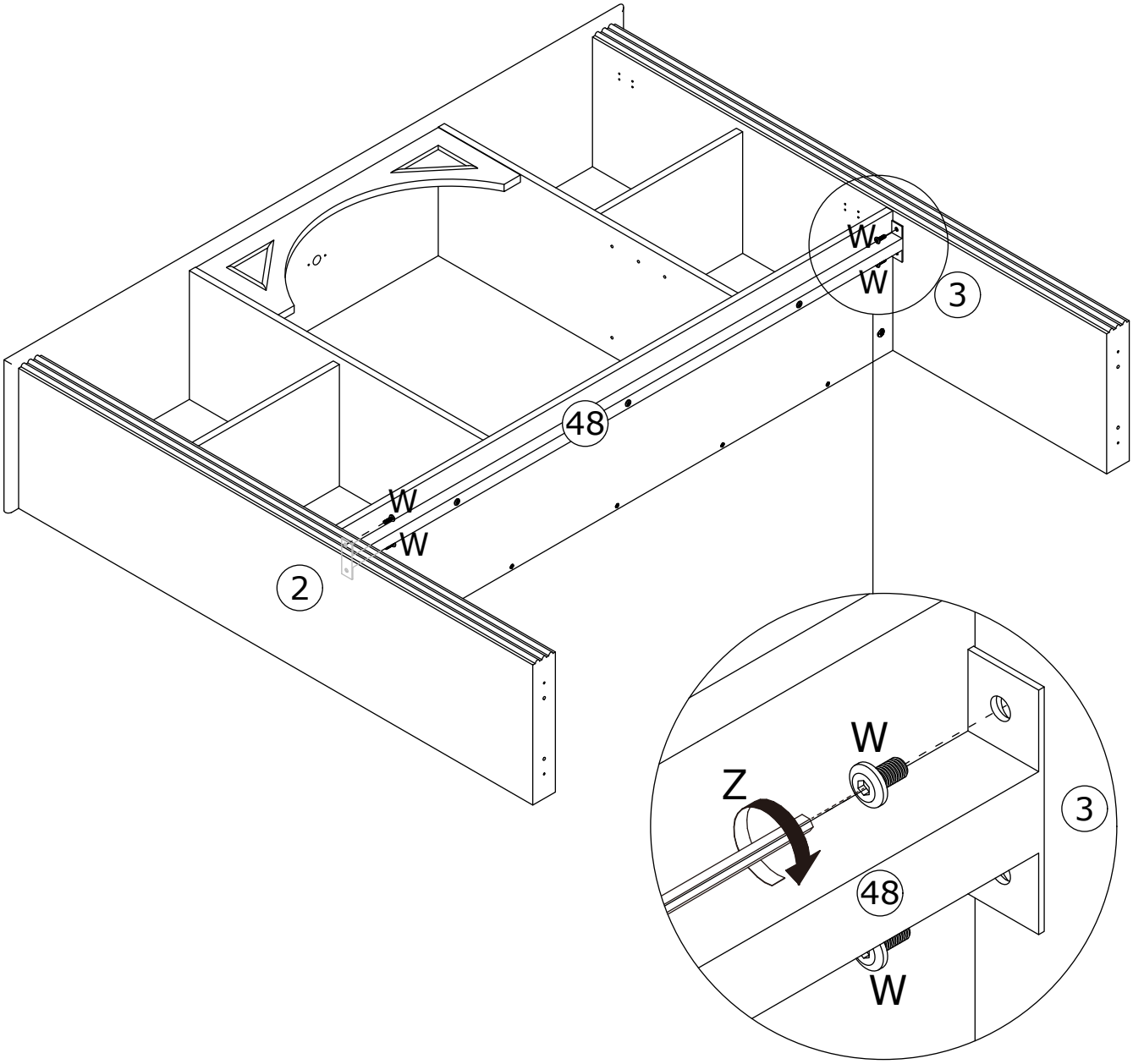

20

A x 11	B x 11	
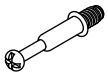 CRA0635B		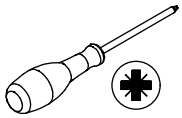

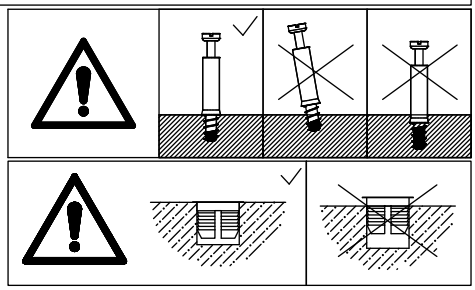

First install plug (B) onto panel 15, then screw the self-tapping rod (A) into.

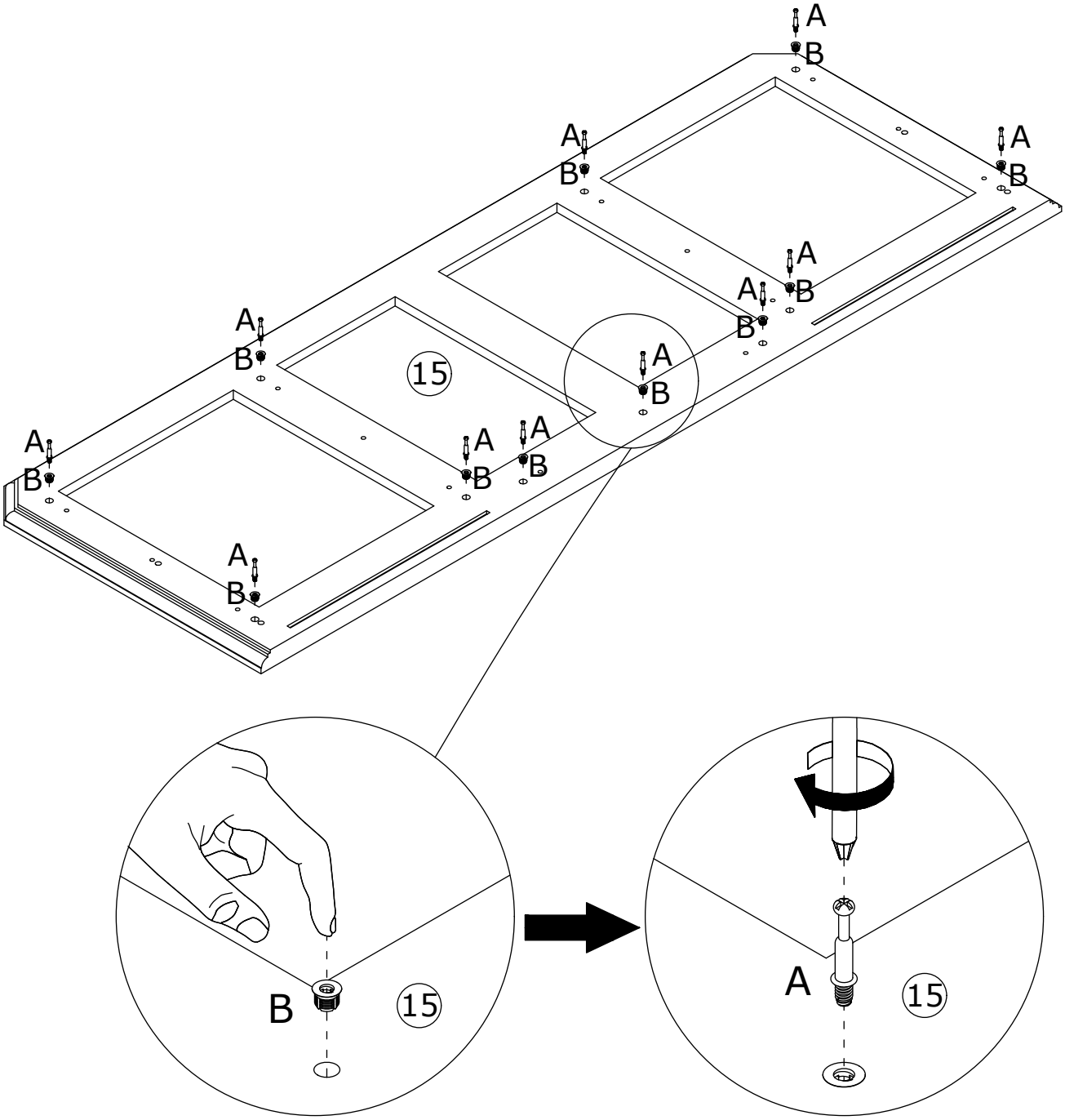

21

D x 4	F x 4	
	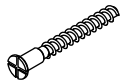	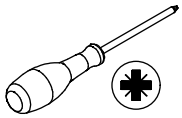
CRF0630A	CRC0540A	

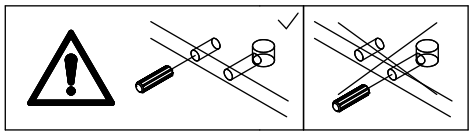

Connect panel 15 to panels 2 and 3 using dowels (D), and secure with screws (F).

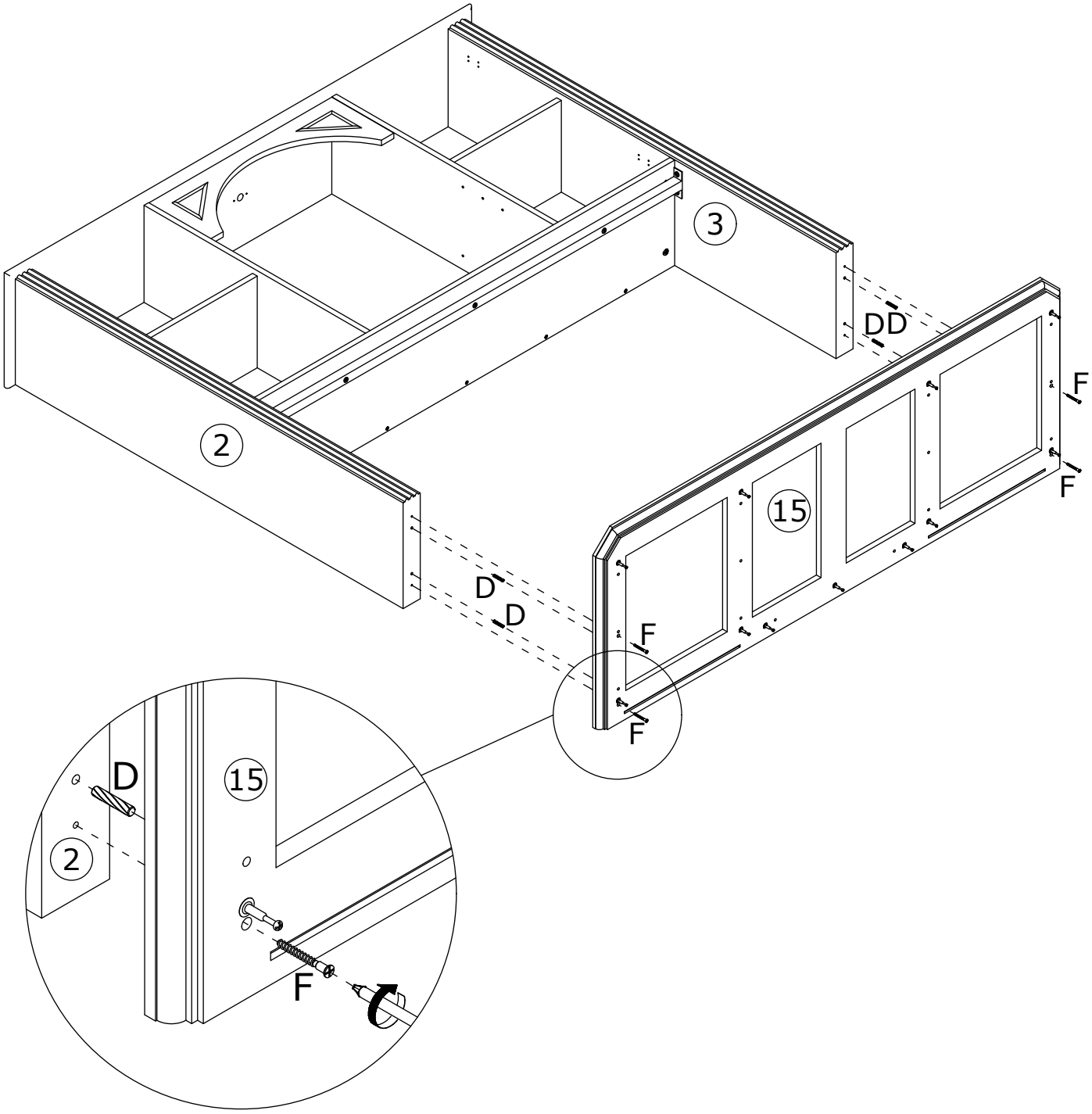

22

A x 12	B x 12	N x 16	L x 4	
CRA0635B		CRD3514A	#3508 14''	

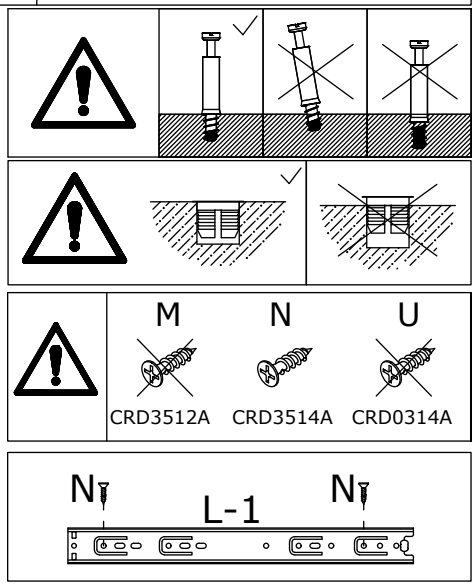

First install plug (B) onto panels 16 and 17, then screw the self-tapping rod (A) into. Secure slide rail (L-1) to panels 16 and 17 using screws (N) .

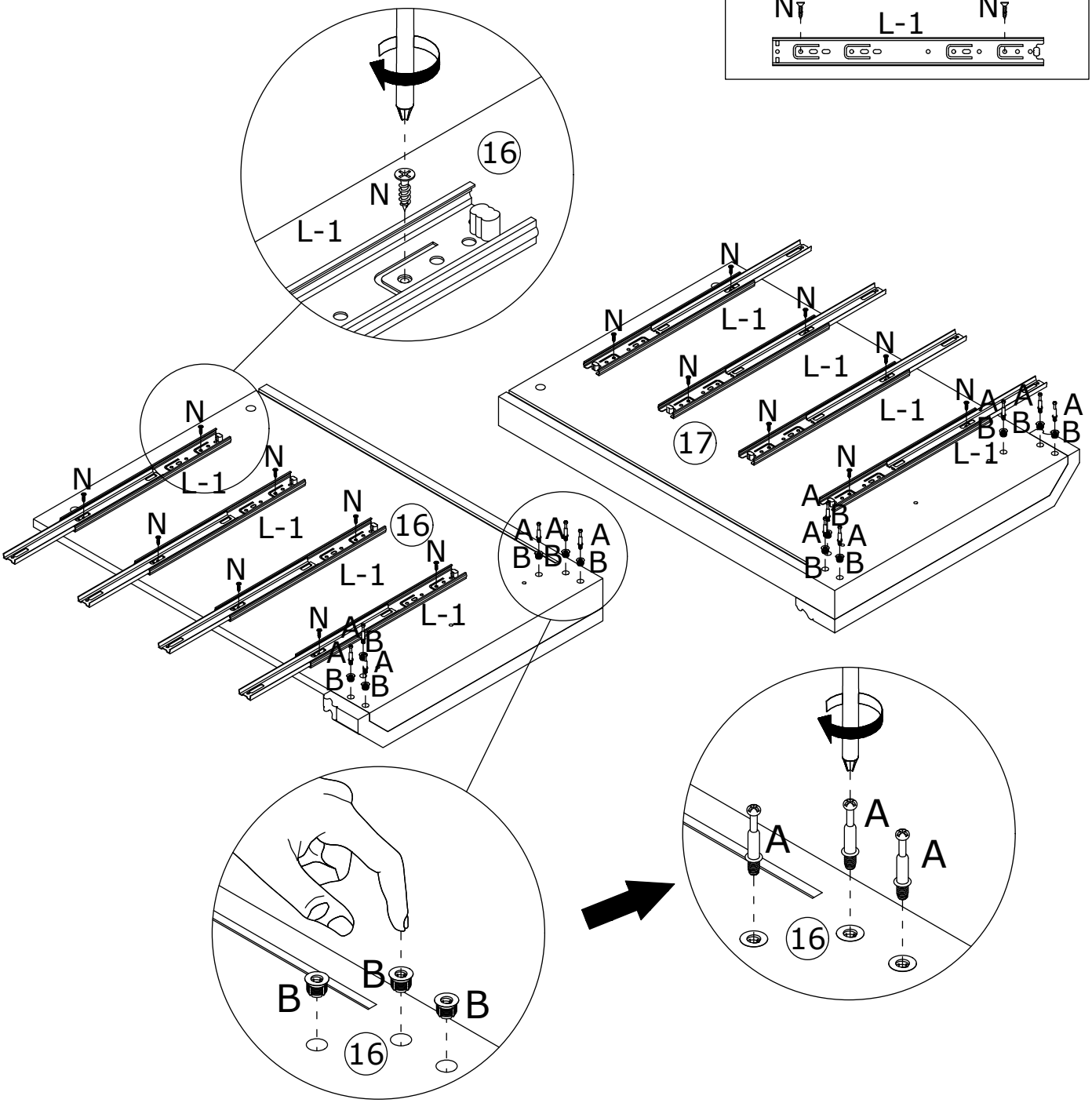

23

A x 6	B x 10	N x 10	L x 5
CRA0635B		CRD3514A	#3508 14''

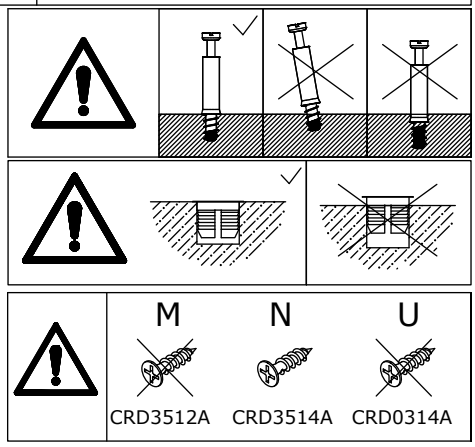

First install plug (B) onto panel 18, then screw self-tapping rod (A) into.
Secure slide rail (L-1) to panel 18 using screws (N).

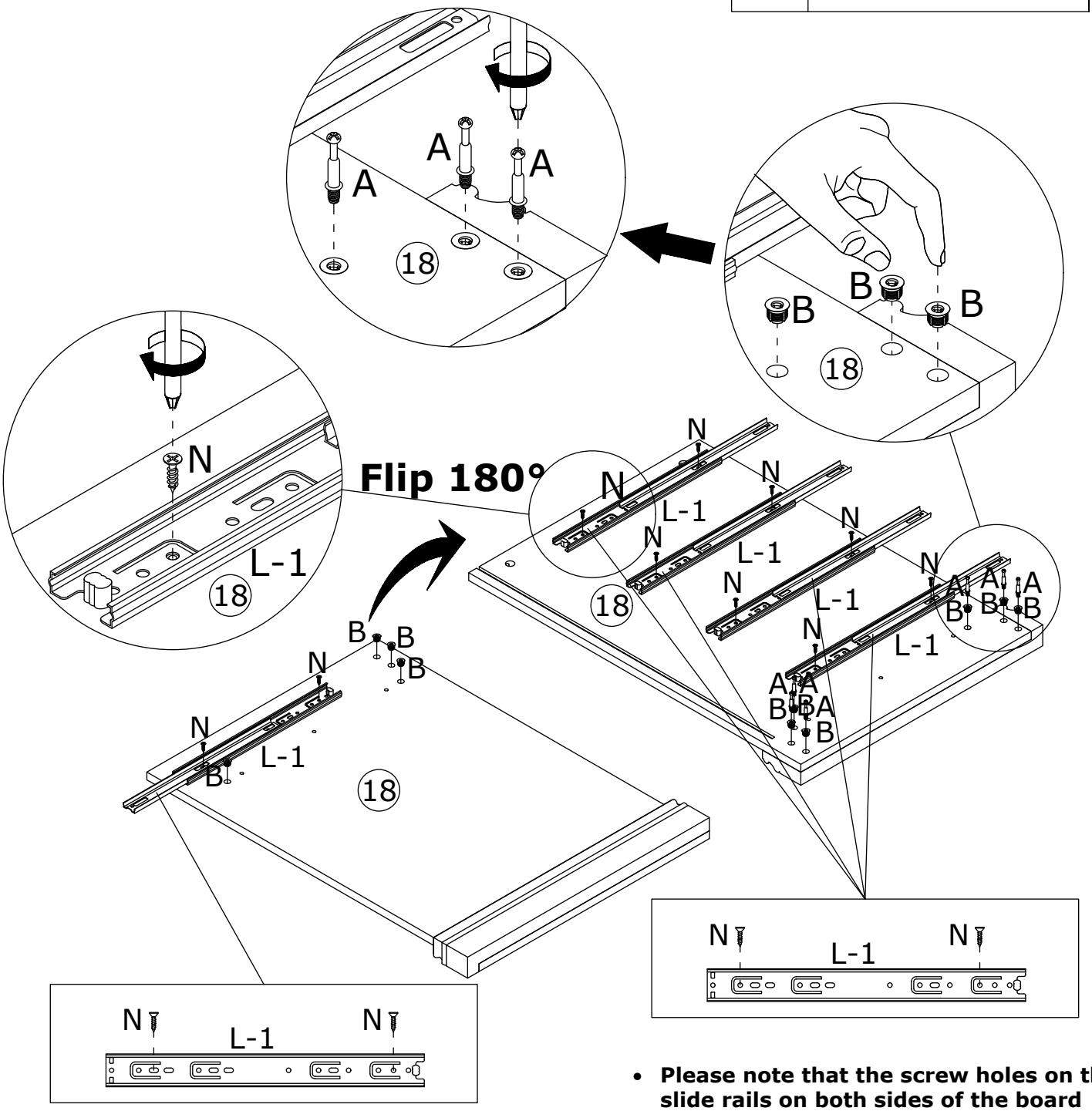

- **Please note that the screw holes on the slide rails on both sides of the board are not the same**

24

A x 6	B x 10	N x 10	L x 5	
CRA0635B		CRD3514A	#3508 14''	

First install plug (B) onto panel 19, then screw self-tapping rod (A) into.
Secure slide rail (L-1) to panel 19 using screws (N).

	M	N	U
	CRD3512A	CRD3514A	CRD0314A

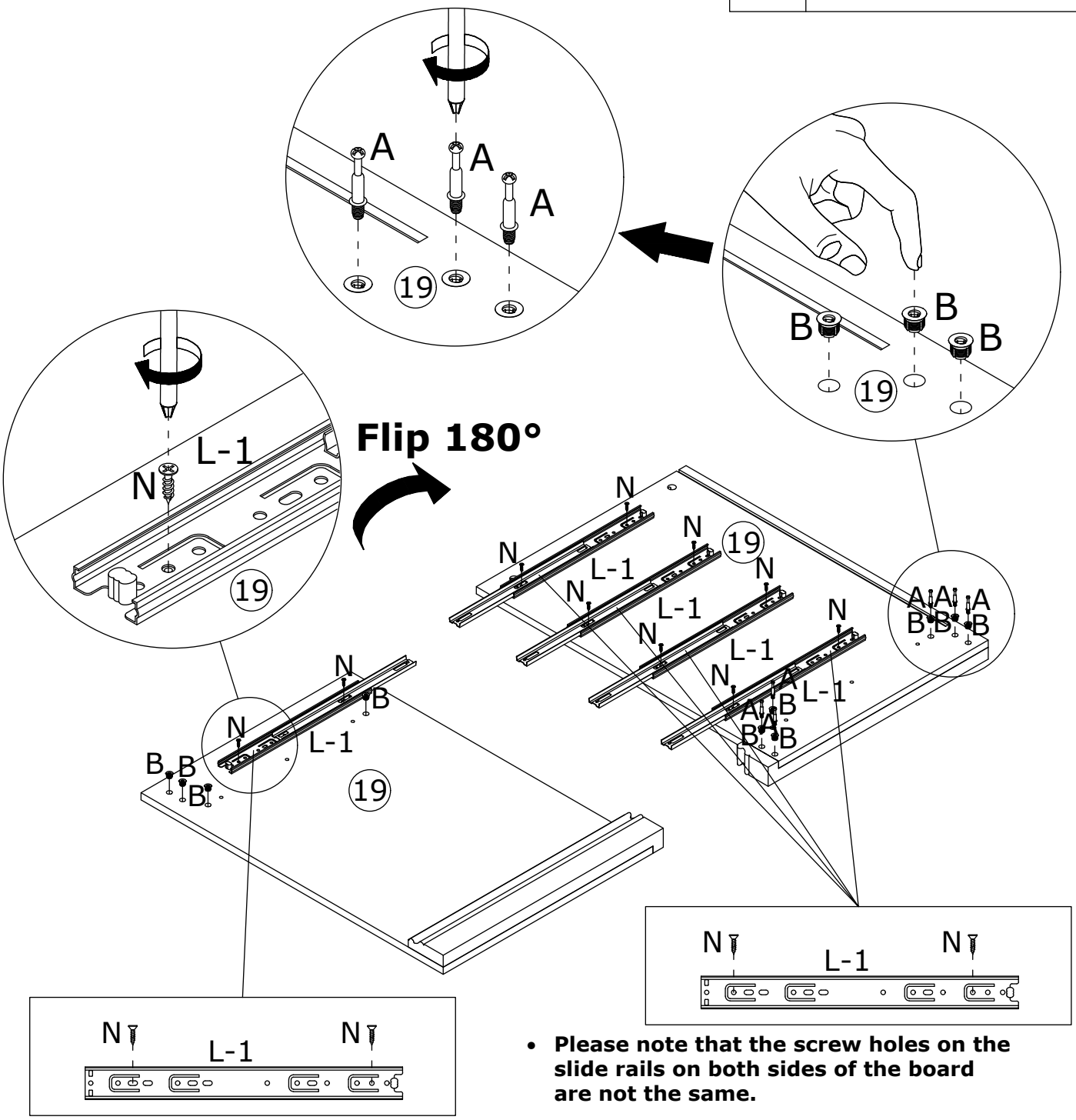

- **Please note that the screw holes on the slide rails on both sides of the board are not the same.**

25

A x 8	B x 8	C x 8	D x 8	
CRA0635B		CRB1595A	CRF0630A	

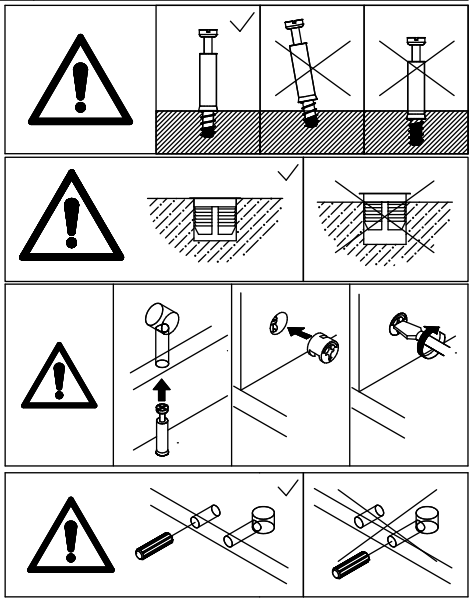

First install plug (B) onto panel 35, then screw self-tapping rod (A) into.
Connect panels 37 and 38 to panel 35 using dowels (D), then put the eccentric wheel (C) and tighten by turning clockwise.

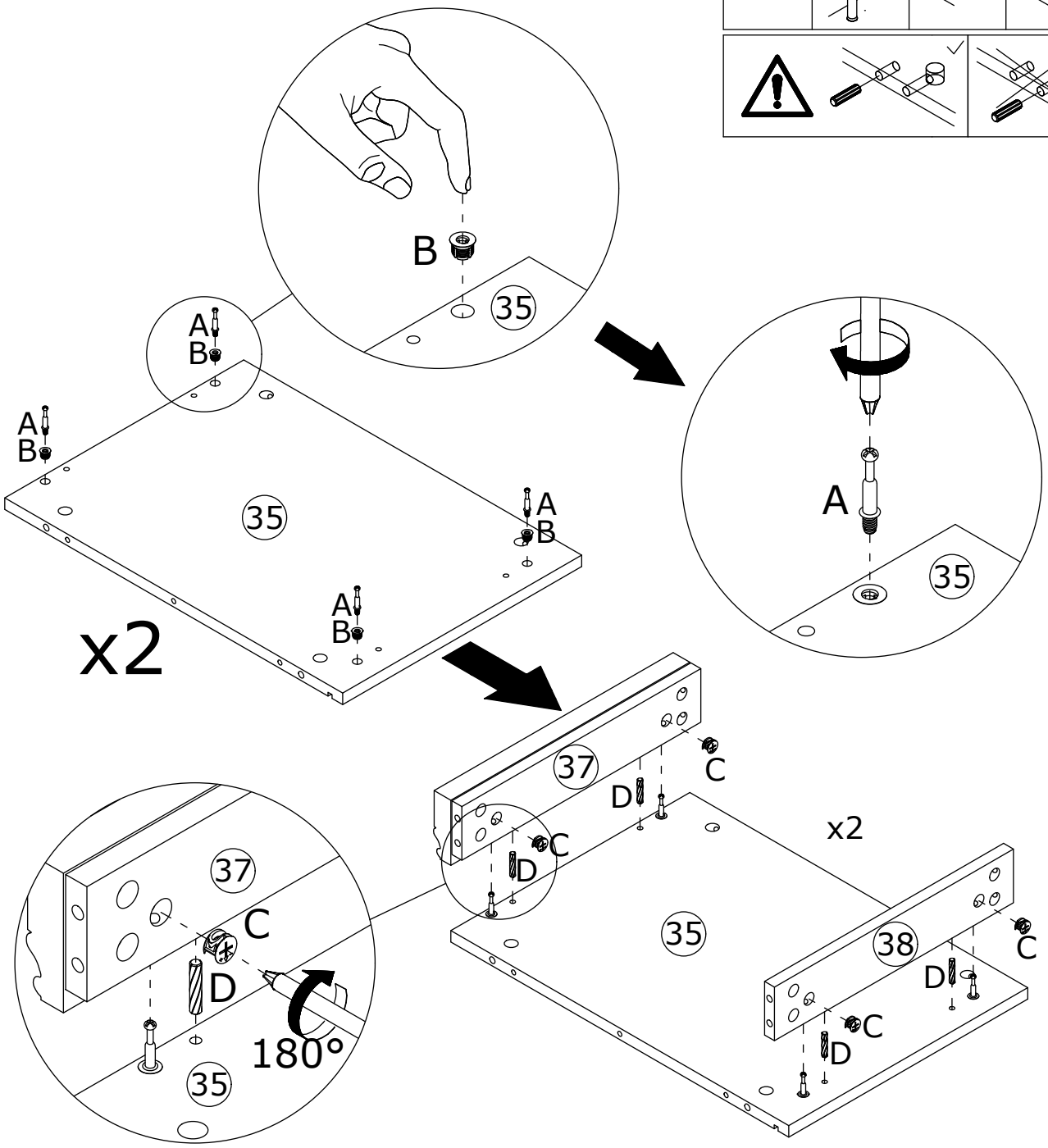

26

C x 8	D x 6	
CRB1595A	CRF0630A	

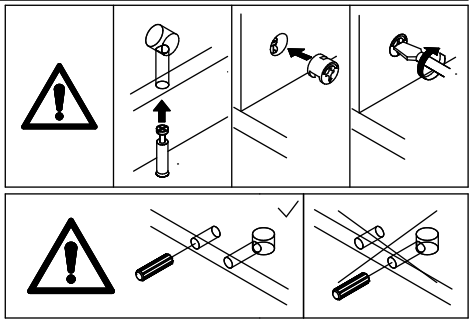

Connect panels 16 and 18 to panels 35, 37, and 38 using dowels (D), then put the eccentric wheel (C) and tighten it by turning clockwise.

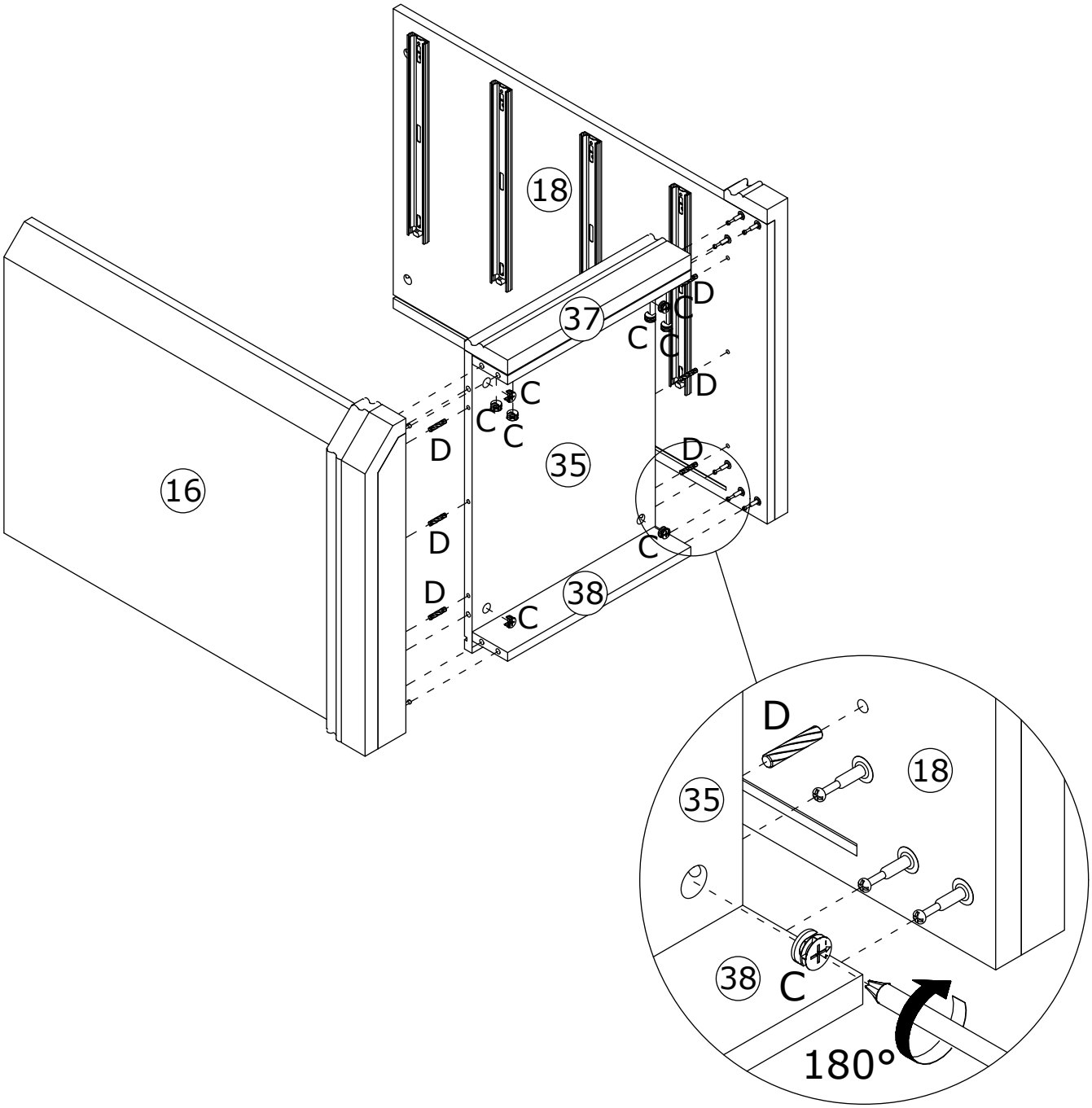

27

C x 8	D x 6	
		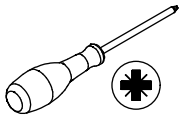
CRB1595A	CRF0630A	

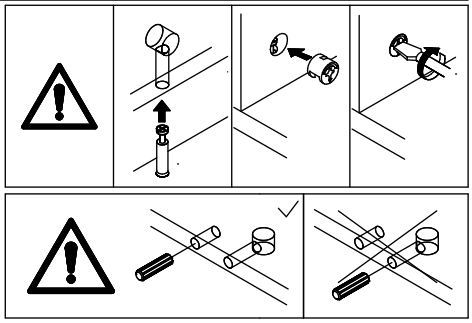

Connect panels 17 and 19 to panels 35, 37, and 38 using dowels (D), then put the eccentric wheel (C) and tighten it by turning clockwise.

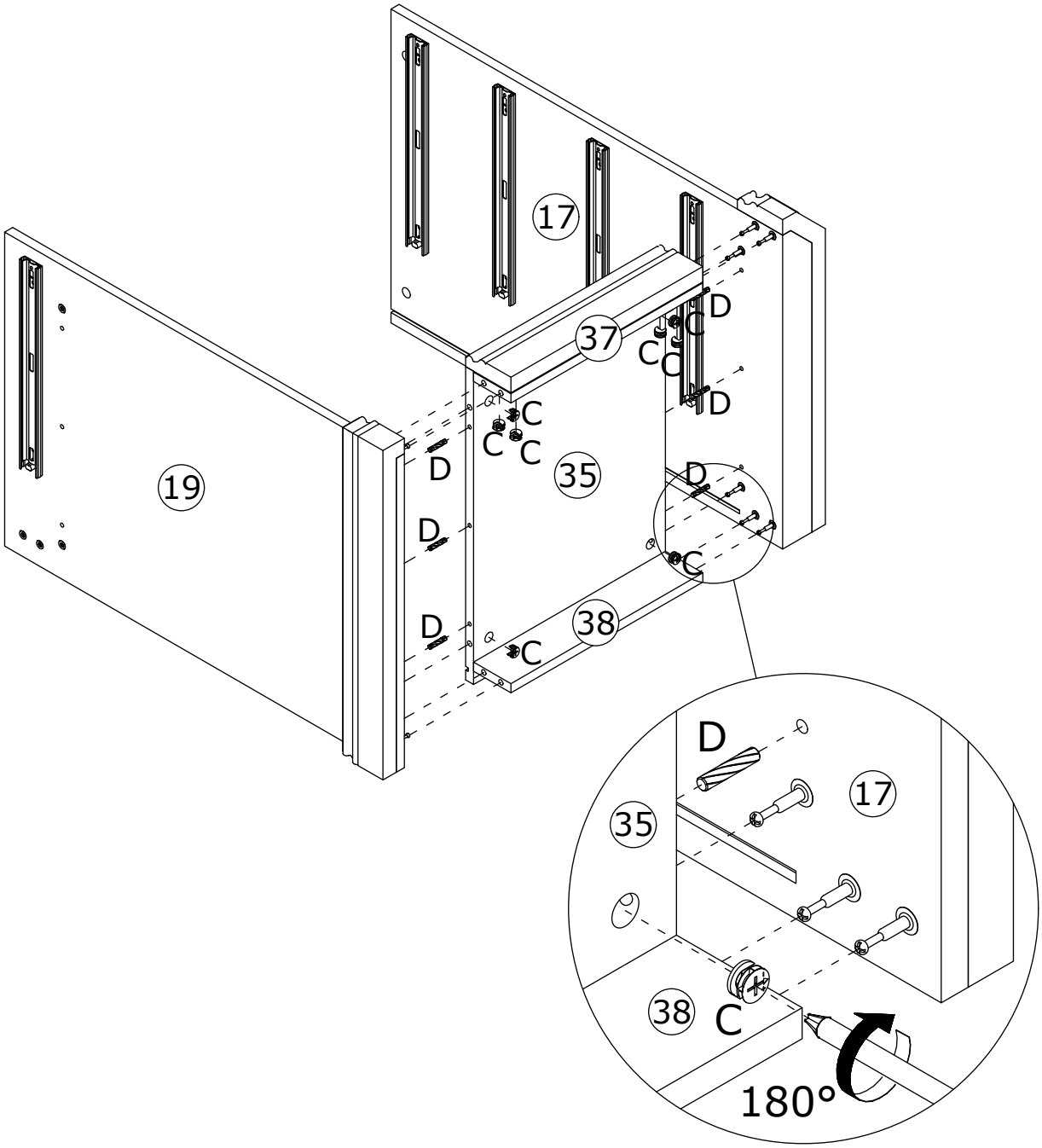

28

A x 3	B x 3	C x 3	D x 2	
CRA0635B		CRB1595A	CRF0630A	

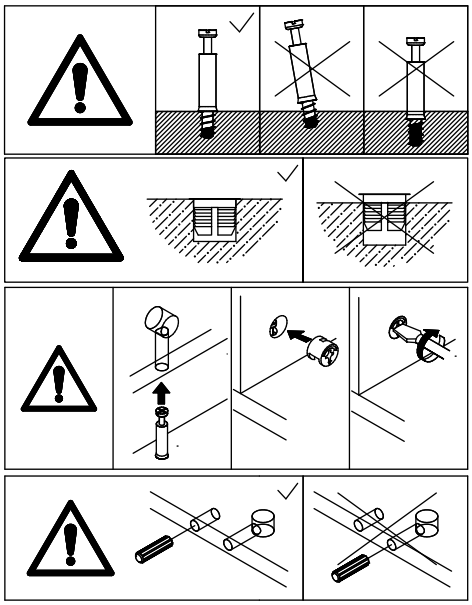

First install plug (B) onto panel 22, then screw the self-tapping rod (A) into.
Connect panel 21 to panel 22 using dowels (D), then put the eccentric wheel (C) and tighten it by turning clockwise.

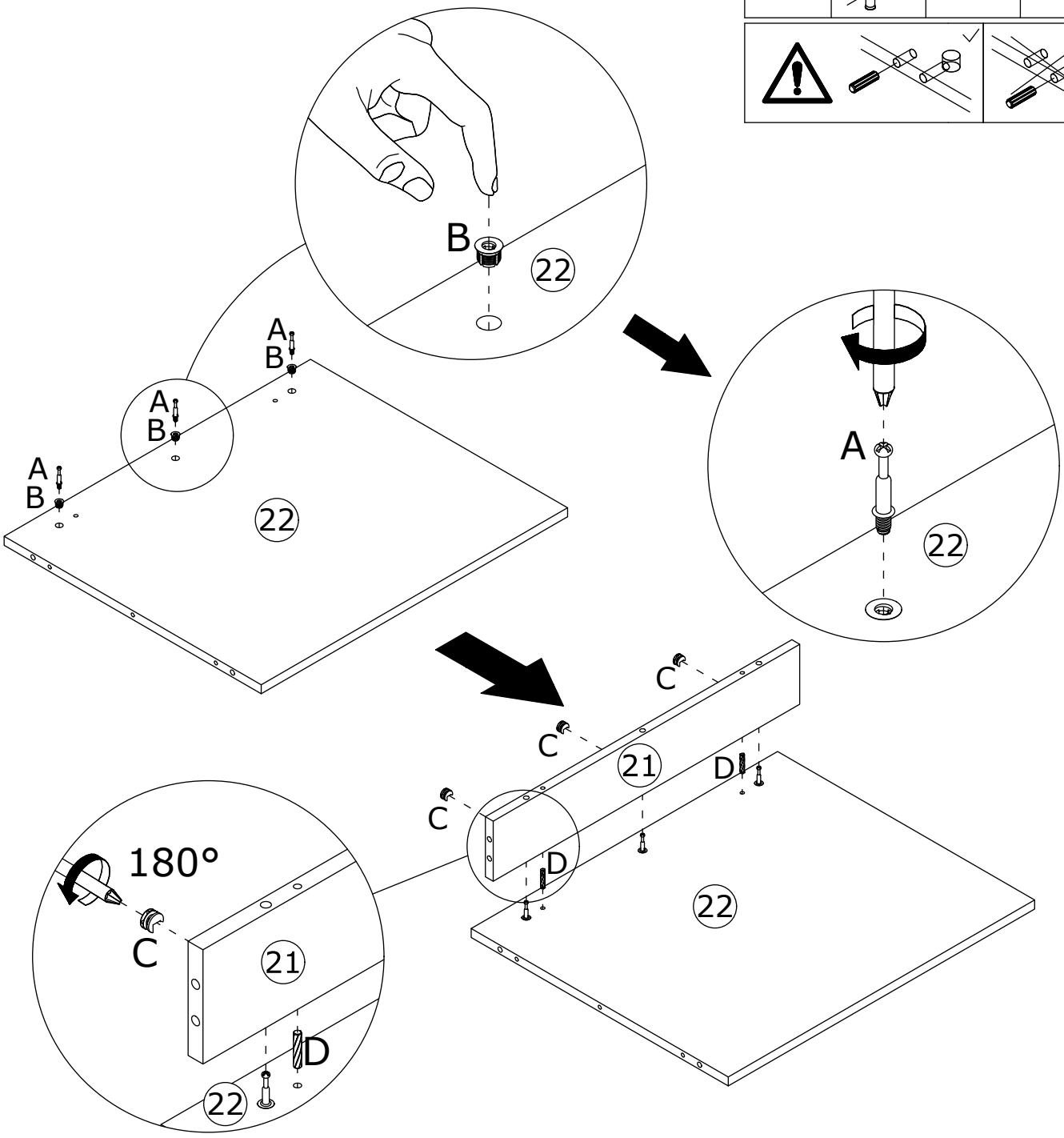

29

A x 8

CRA0635B

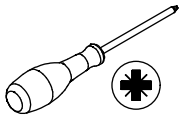

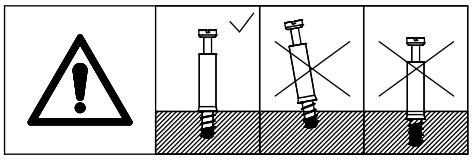

Screw the self-tapping rod (A) into panels 18 and 19.

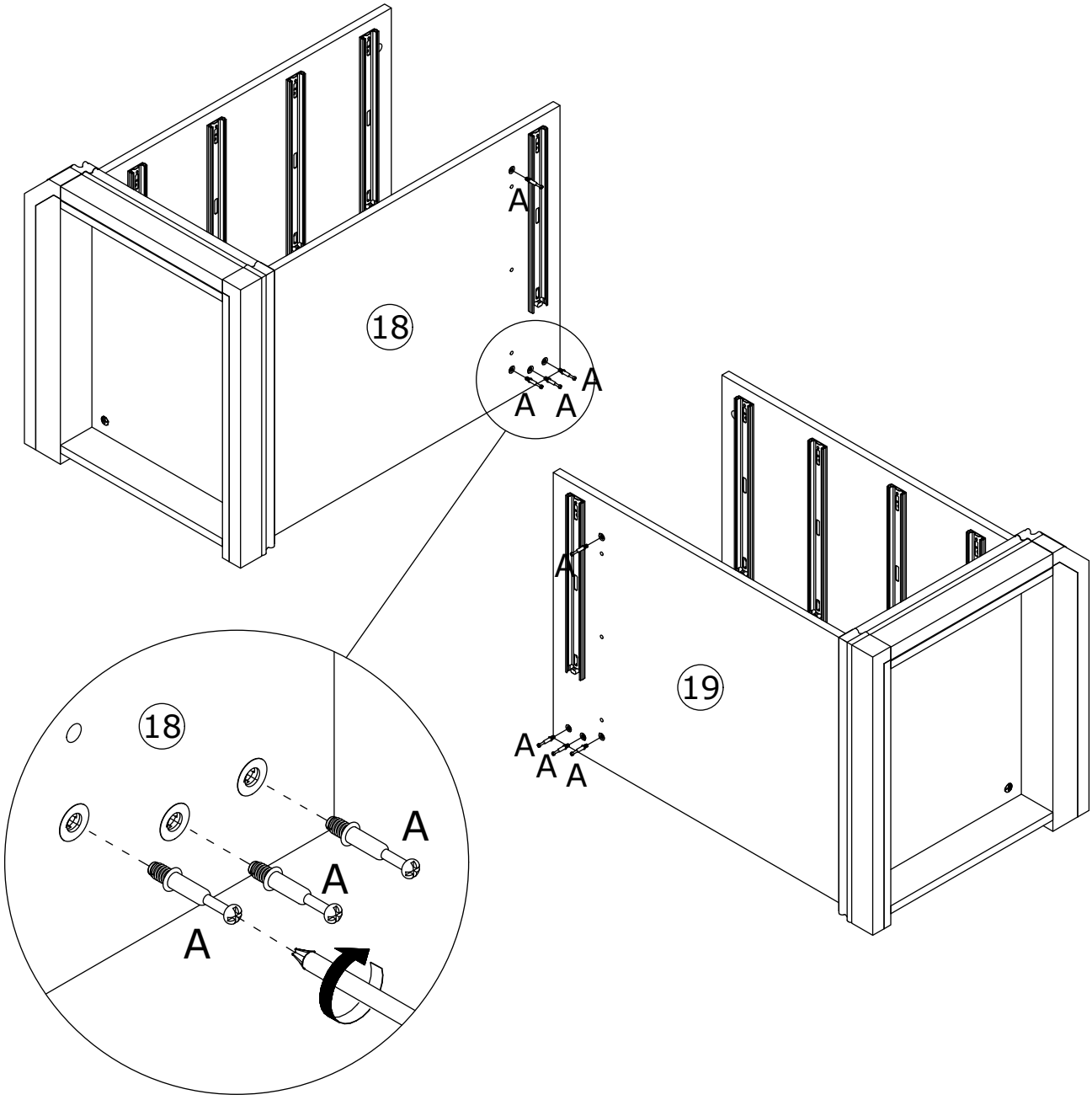

30

C x 4	D x 6	
CRB1595A	CRF0630A	

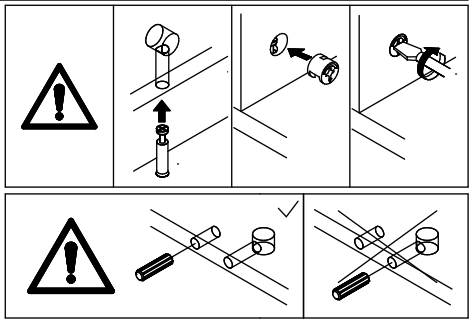

Connect panels 18 and 19 to panels 21 and 22 using dowels (D), then put the eccentric wheel (C) and tighten it by turning clockwise.

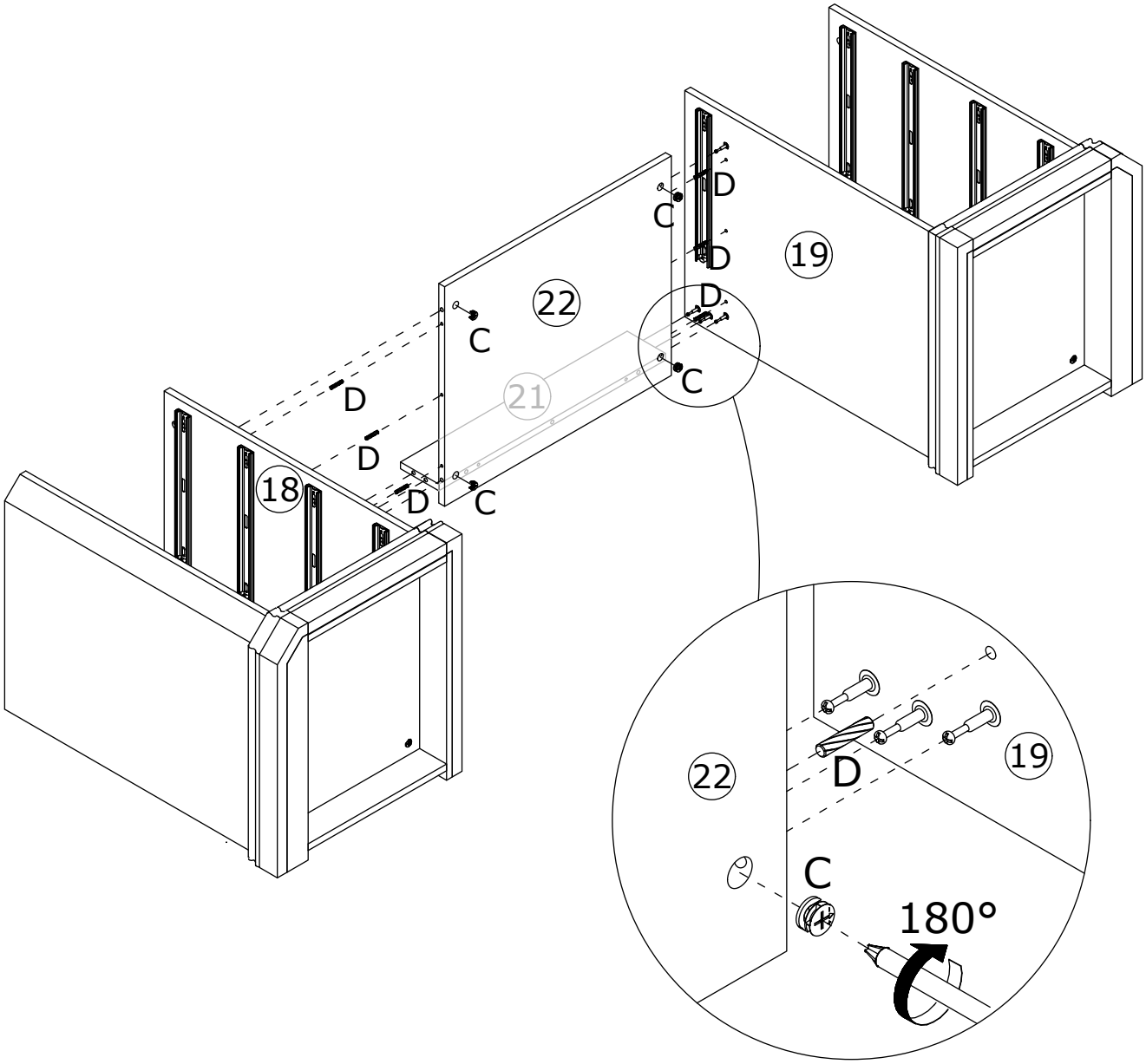

31

C x 12

CRB1595A

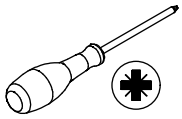

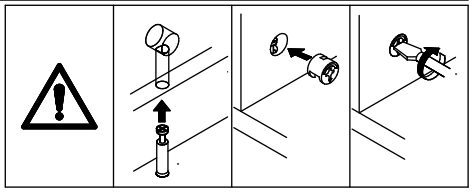

Put the eccentric wheel (C) into panel 38 and 21, tighten it by turning clockwise.

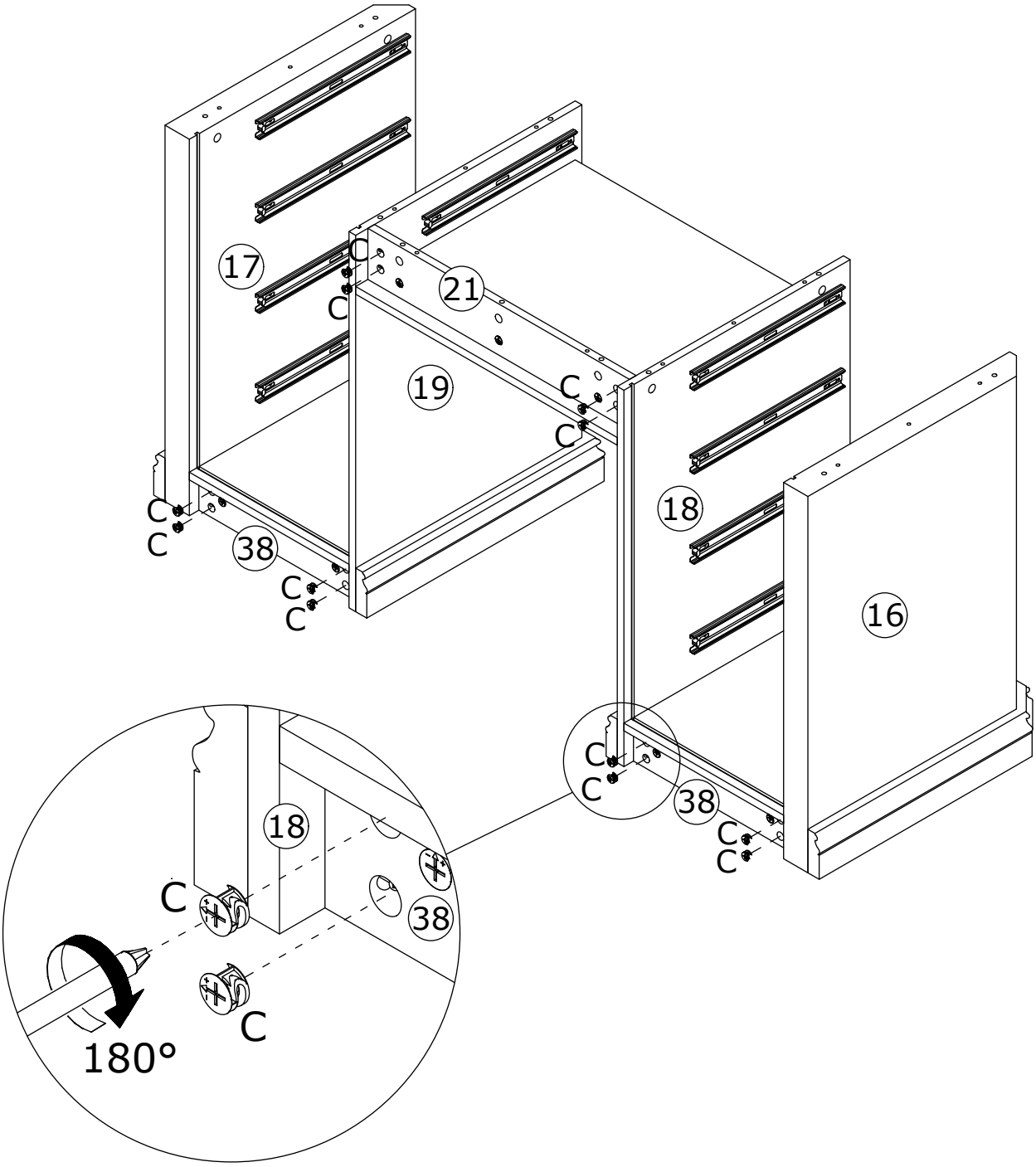

32

Insert panel 20 into the available slots.

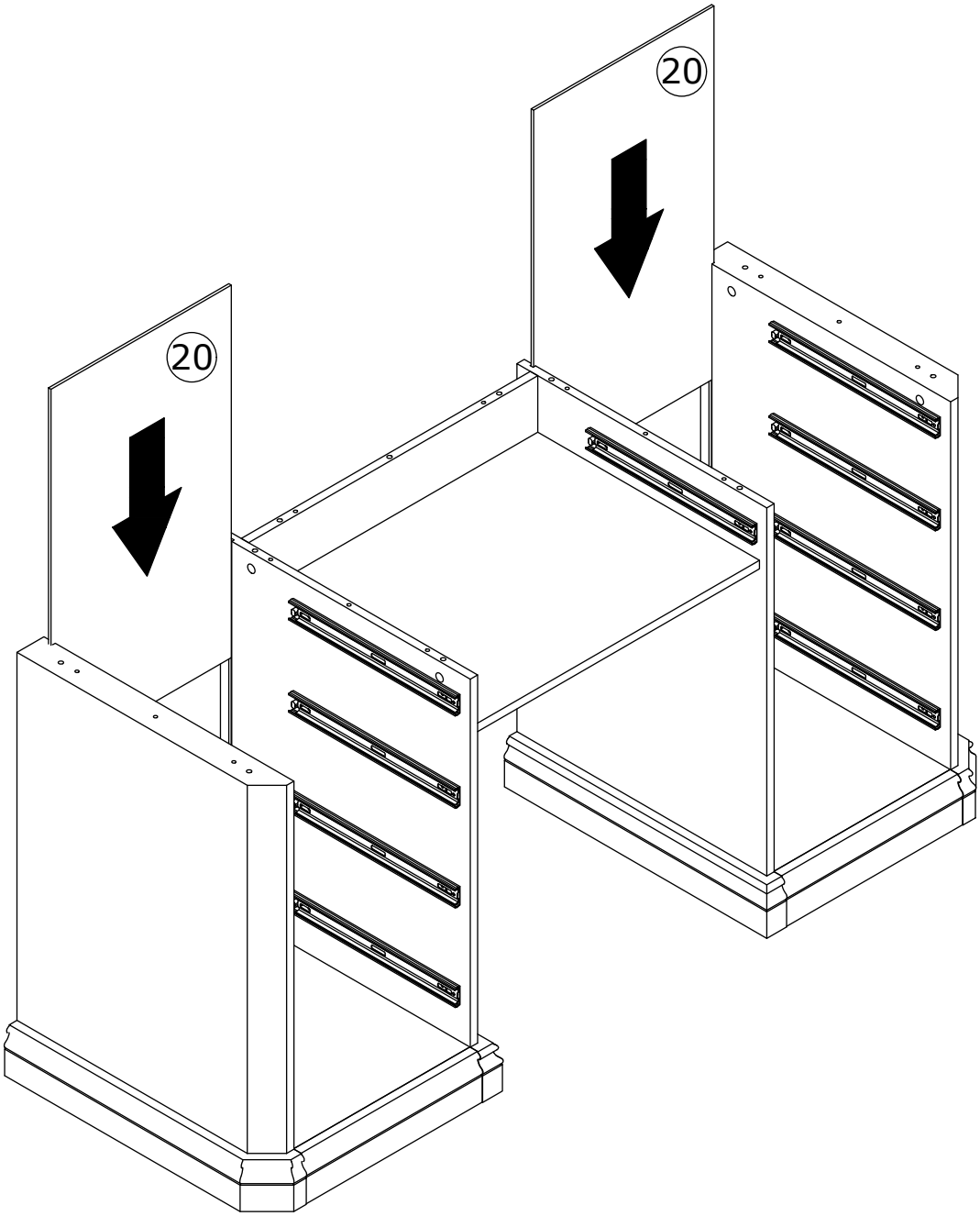

33

D x 14

CRF0630A

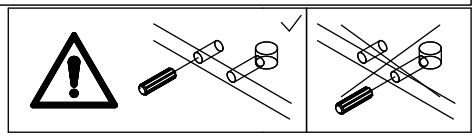

Insert wooden dowels (D) into panels 16, 17, 18, 19, and 21.

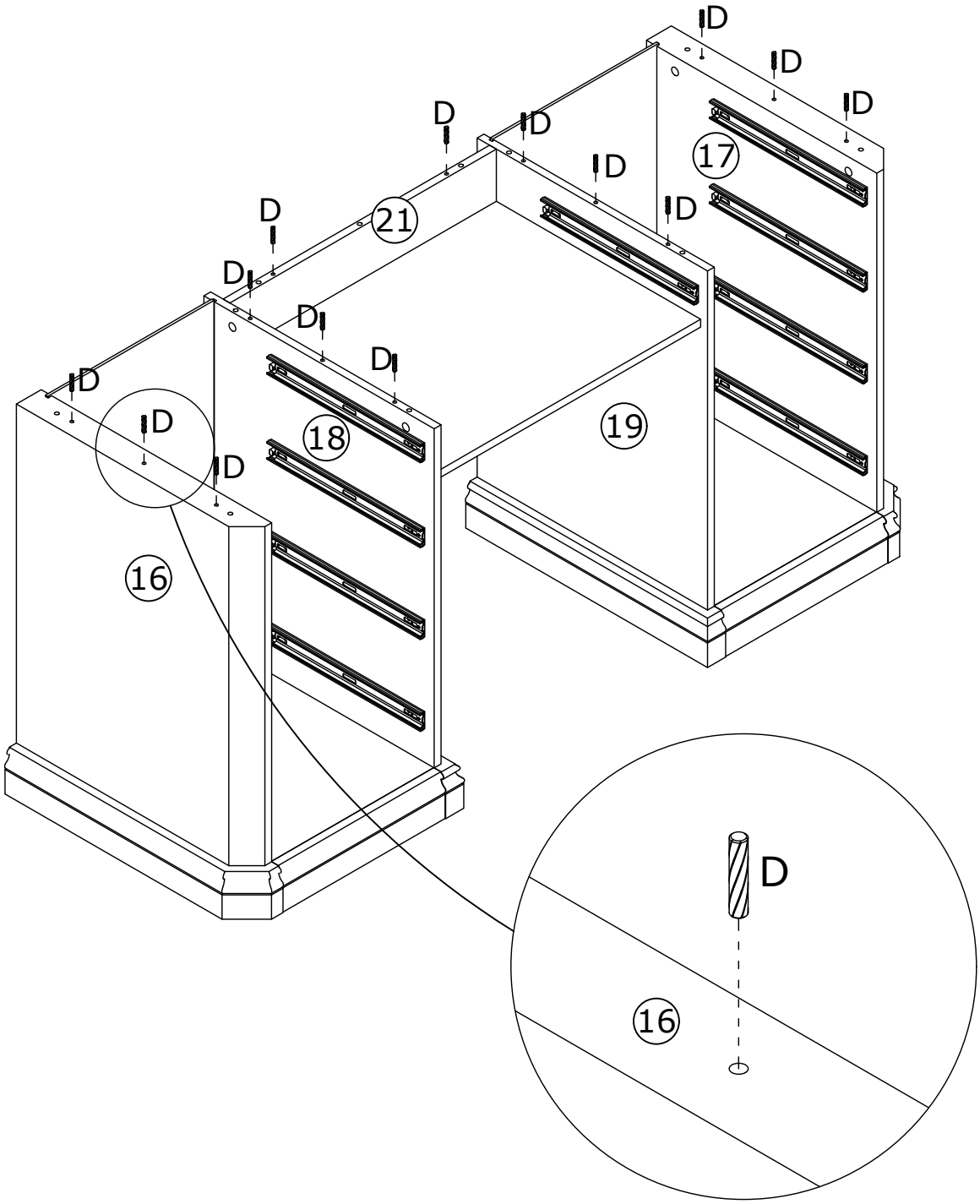

34

C x 11

CRB1595A

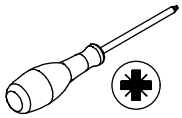

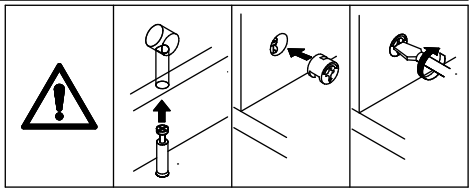

Connect panel 15 to the mounting unit and put the eccentric pulley (C), tighten by turning clockwise.

Caution: When moving the cabinet, be careful not to pinch your fingers.

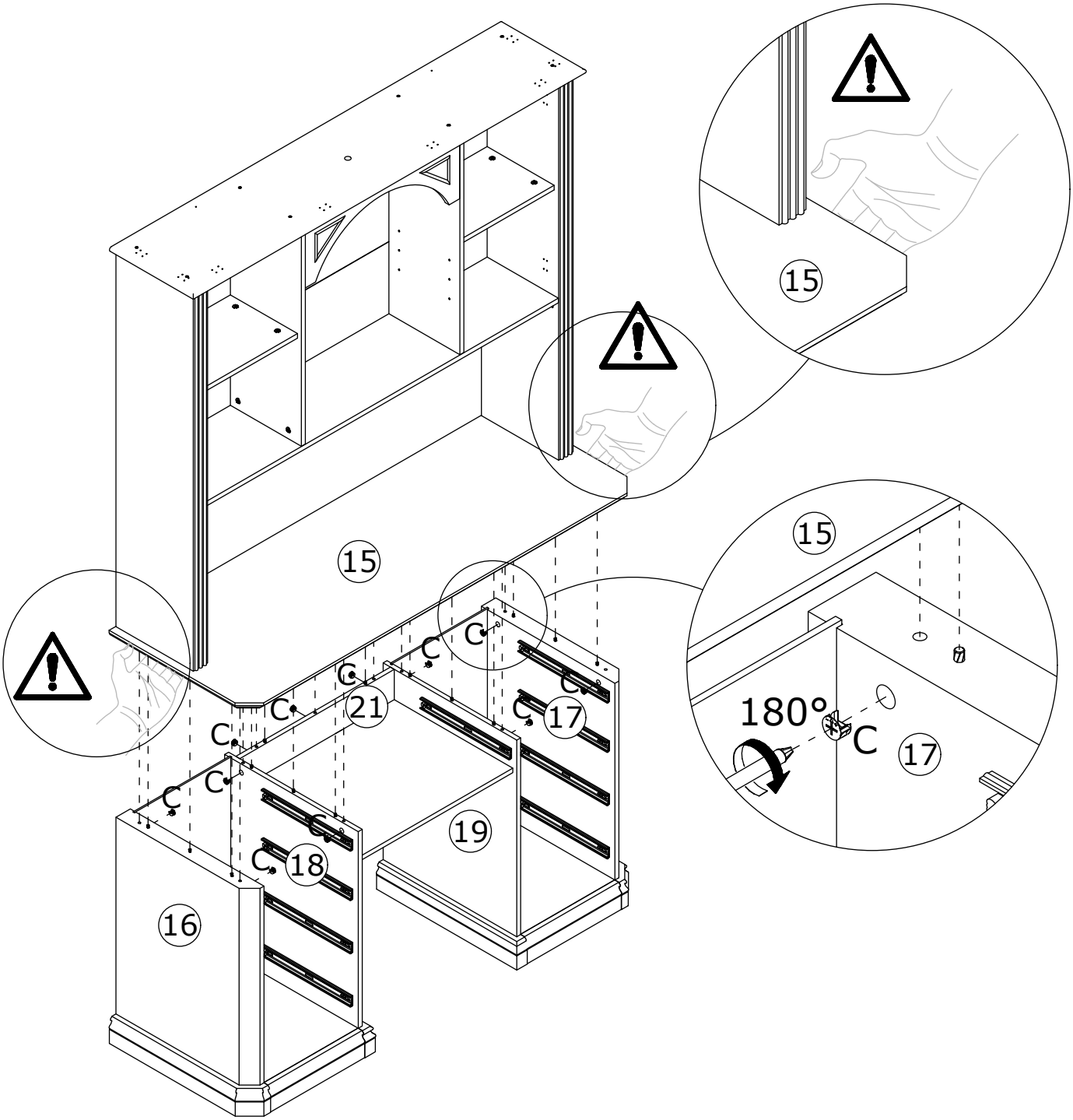

35

K x 4	N x 8	
DGA861C	CRD3514A	

	M	N	U
	CRD3512A	CRD3514A	CRD0314A

Secure hinge (K) to panels 12 and 13 using screws (N).

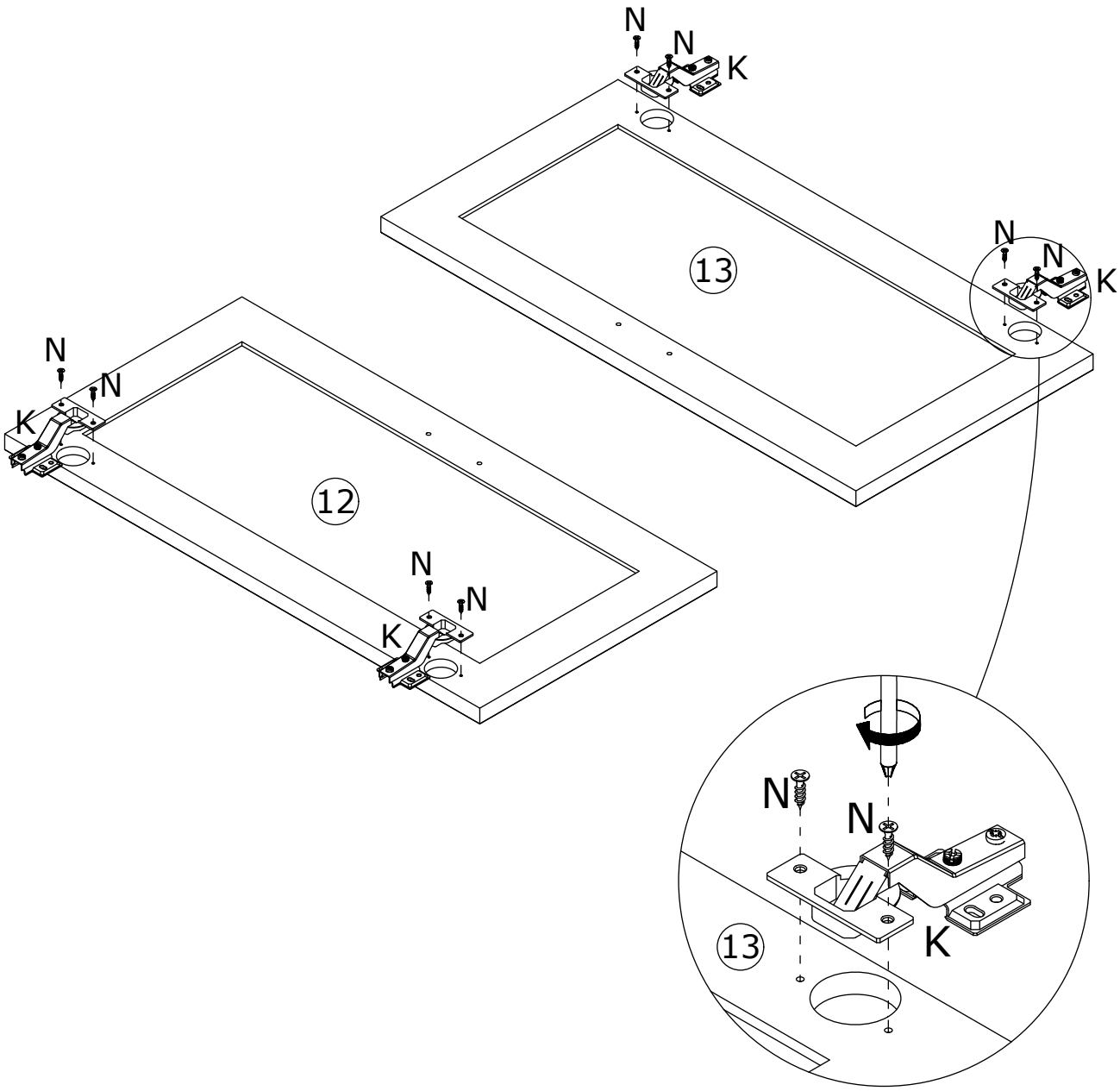

36

N x 16	
CRD3514A	

	M	N	U
	CRD3512A	CRD3514A	CRD0314A

Secure door panels to panels 2 and 3 using screws (N).

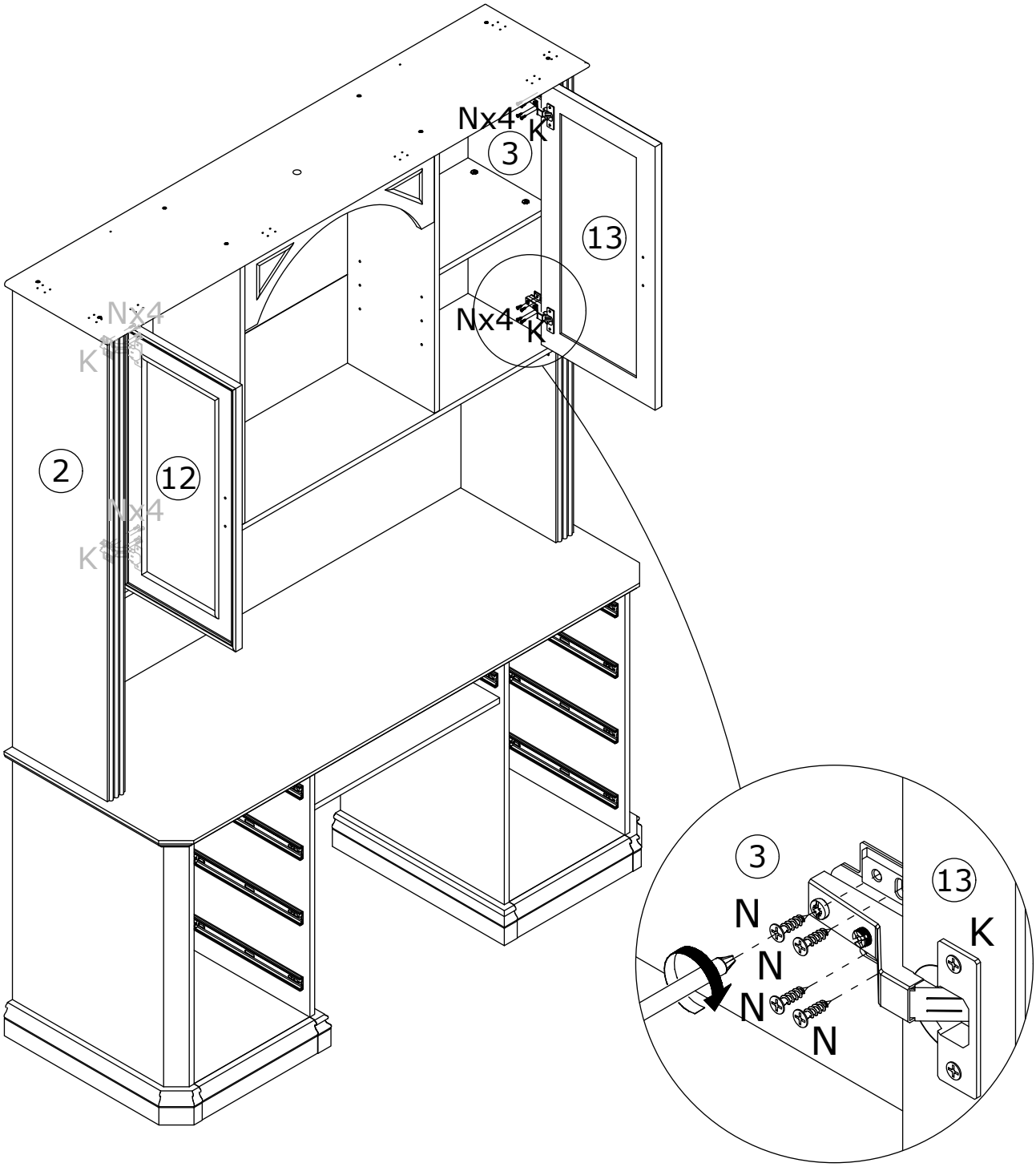

37

H x 2	J x 4	
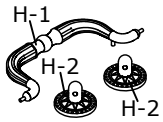	CRE0418A	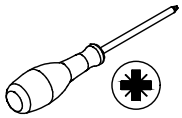

Secure handle (H) to panels 12 and 13 using screws (J).

Note: Pay attention to the installation orientation of handle (H-1).

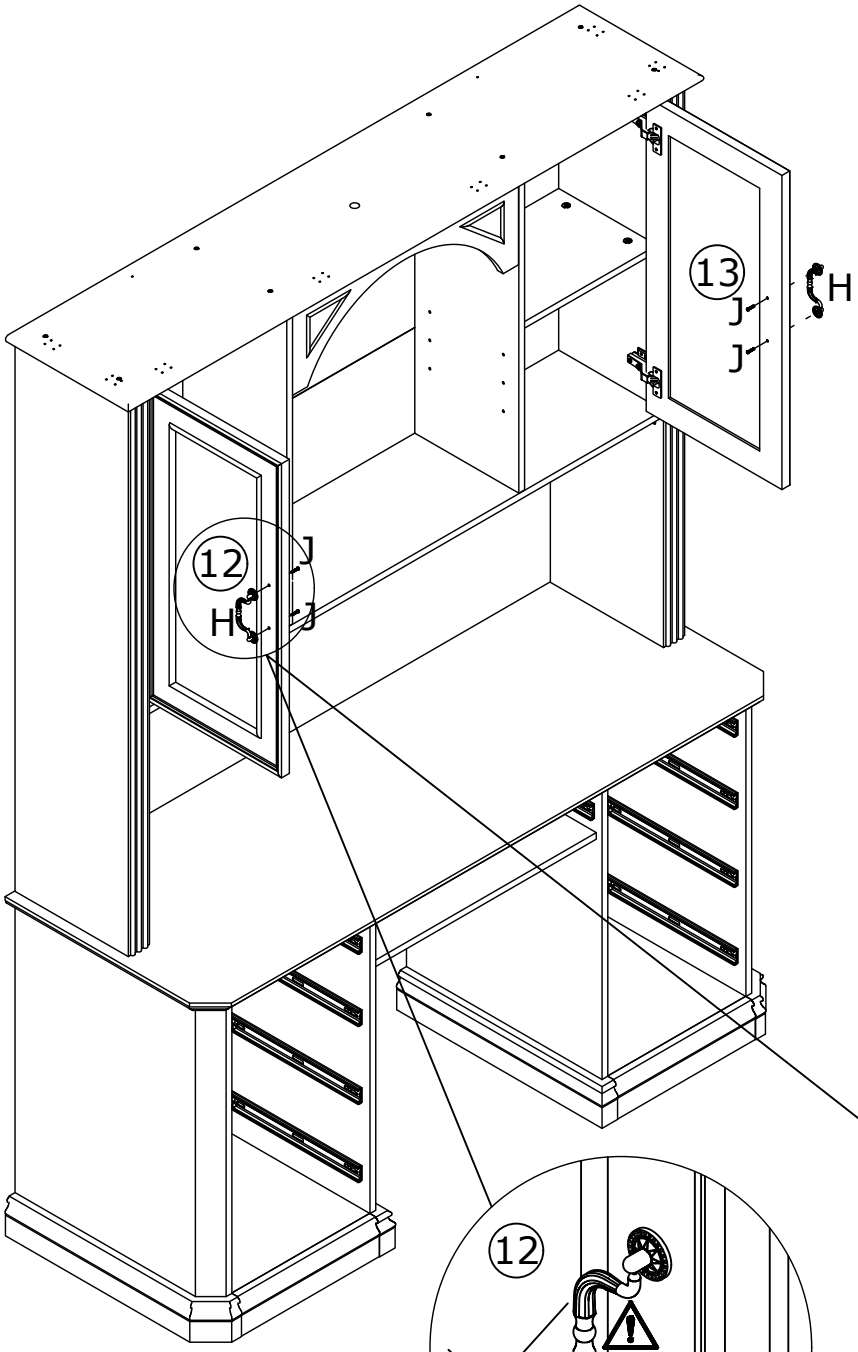

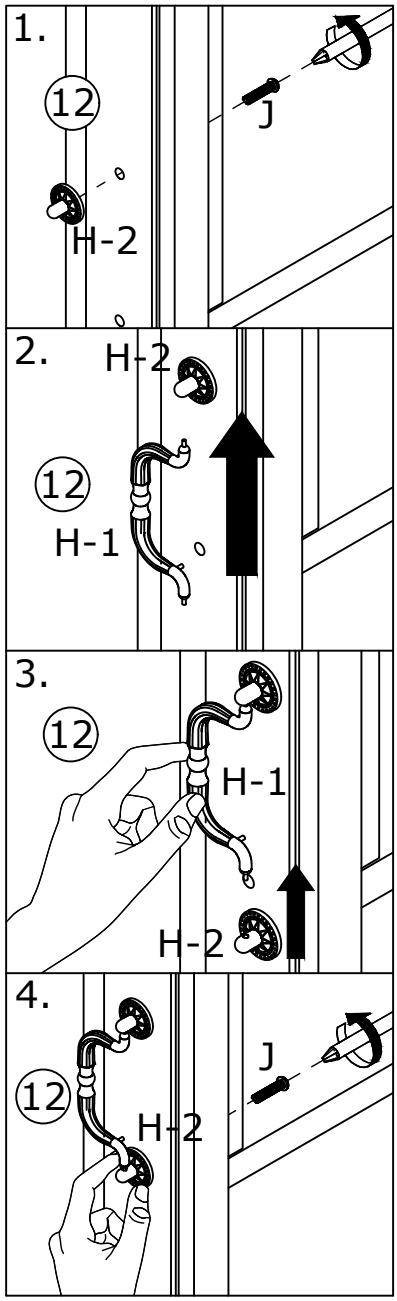

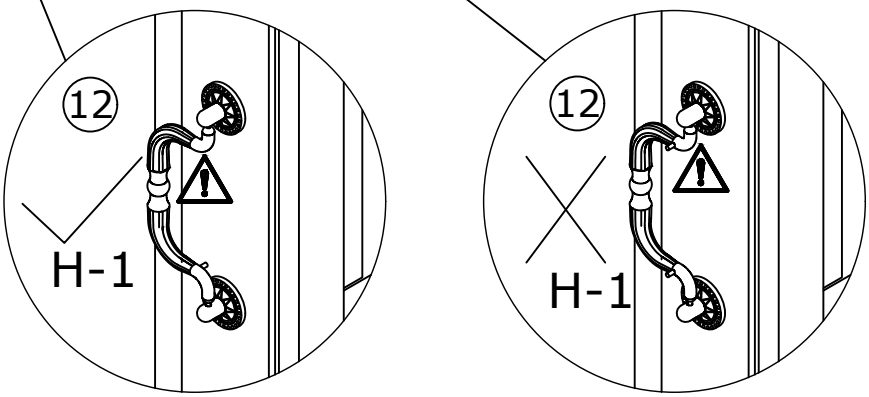

38

T x 32	U x 32	
	CRD0314A	

	M	N	U
	CRD3512A	CRD3514A	CRD0314A

Insert clips (T) into the available slots and secure them with screws (U).

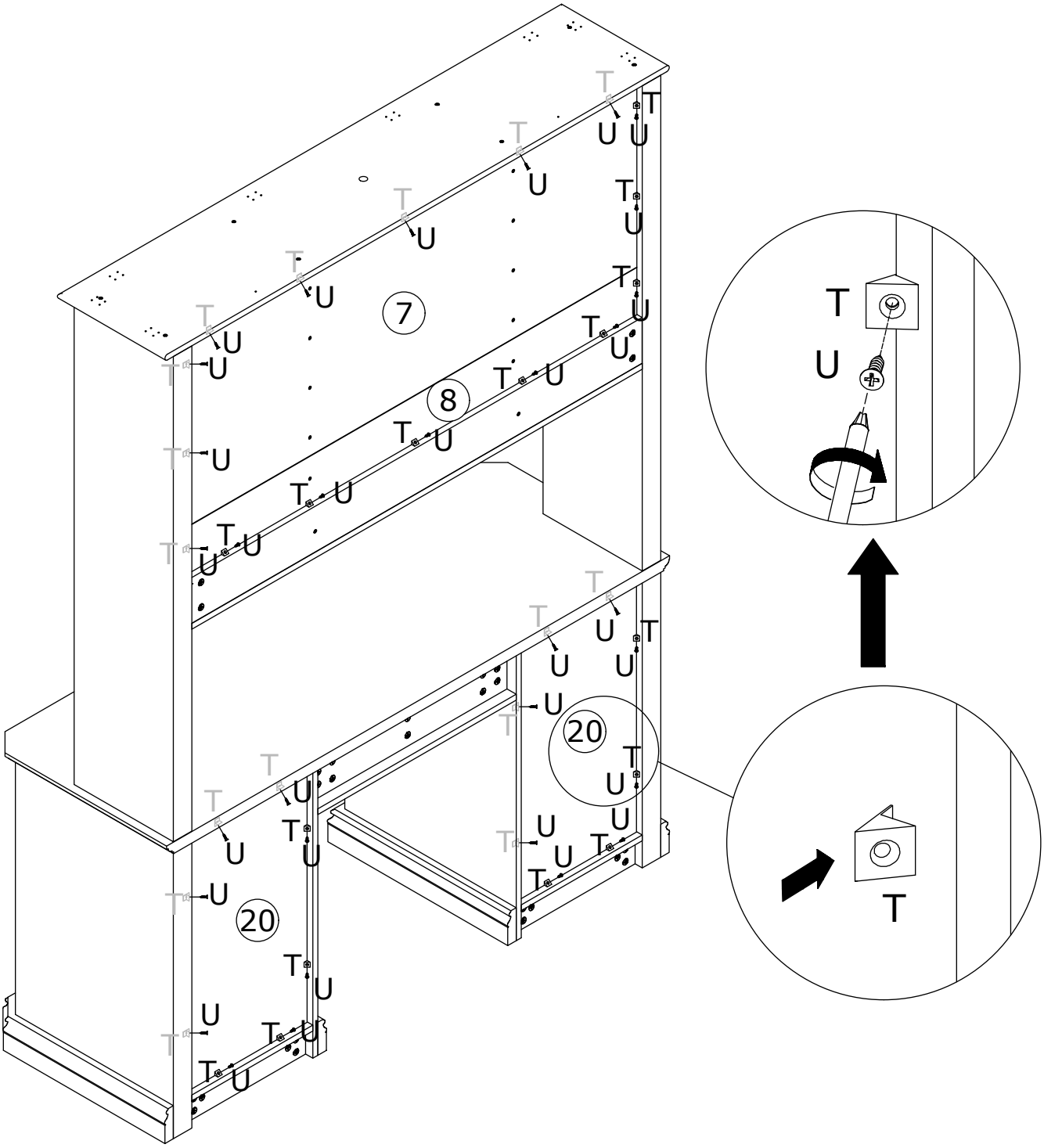

39

N x 2	Q x 2	
CRD3514A		

	M	N	U
	CRD3512A	CRD3514A	CRD0314A

Secure component (Q) to panel 1 using screws (N).

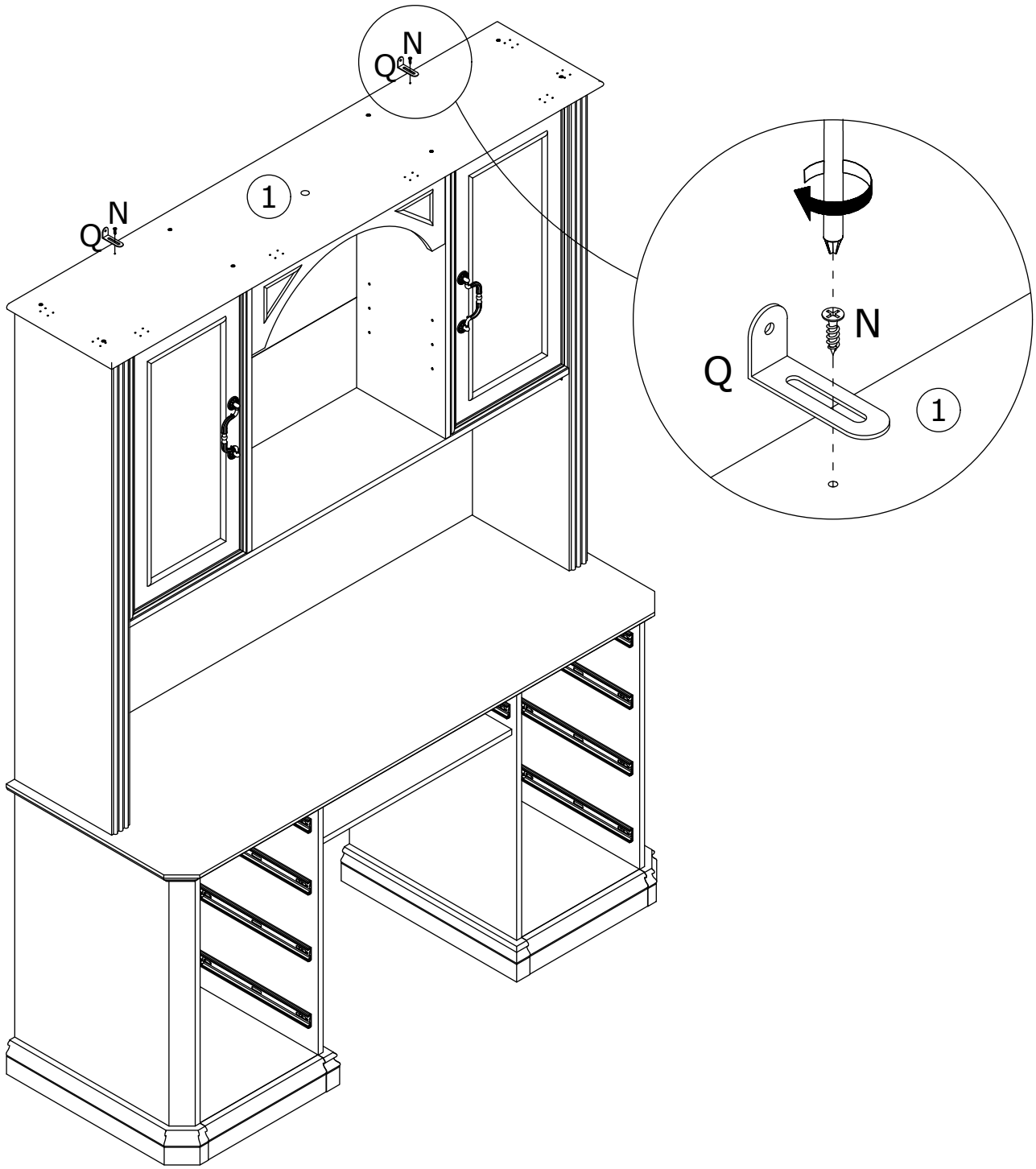

40

P x 2	R x 2	
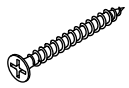 CRD3535A	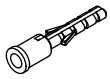	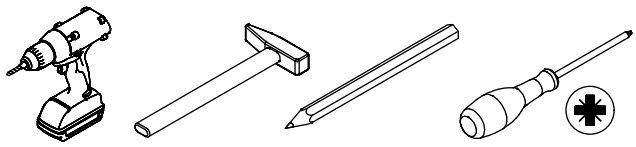

Install anti-tip devices.

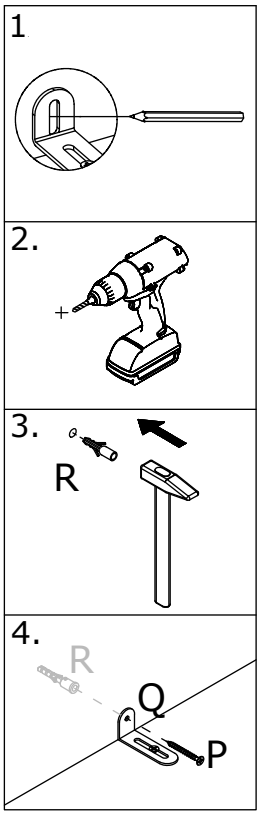

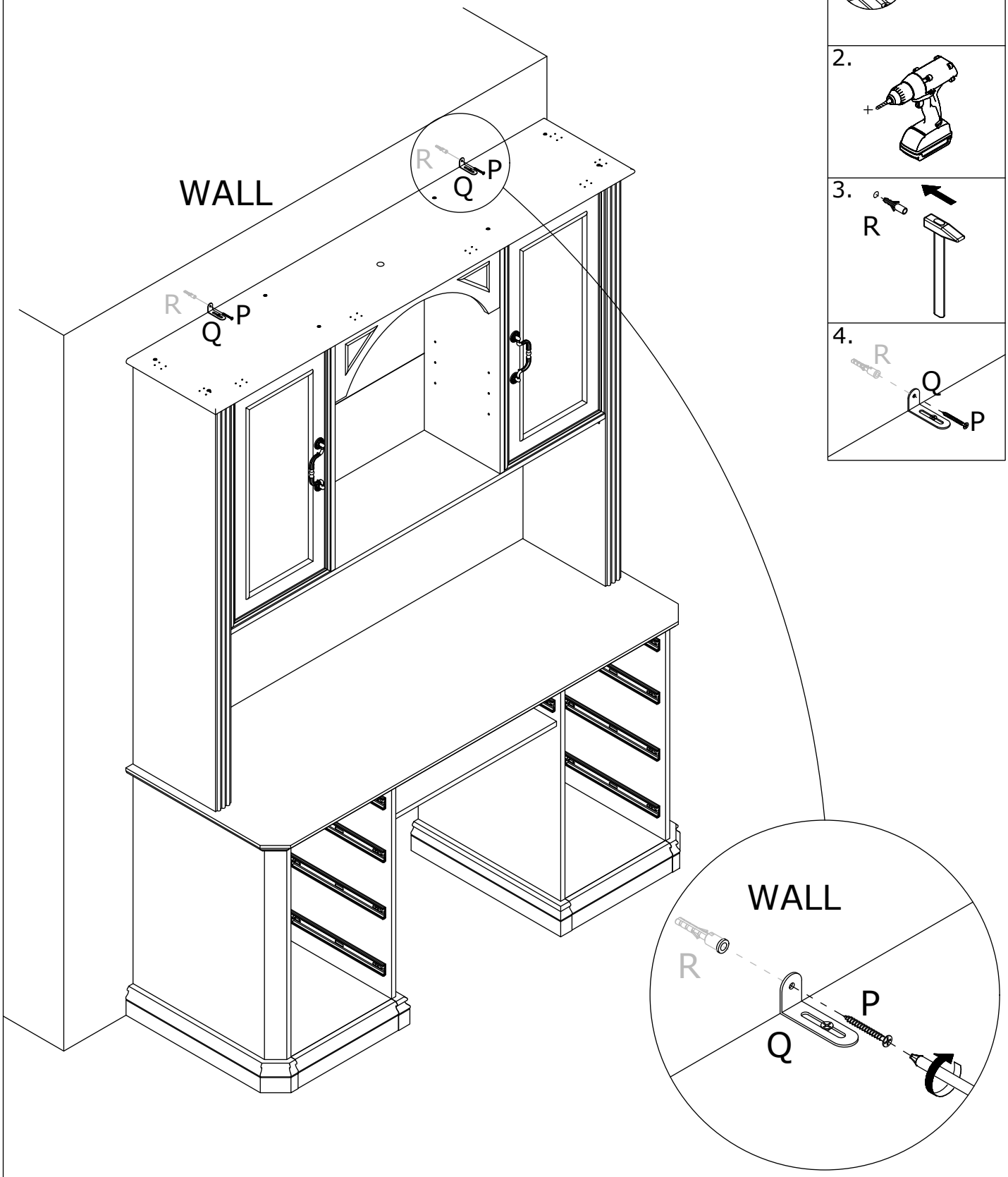

41

N x 32	X x 4	
CRD3514A		

	M	N	U
	CRD3512A	CRD3514A	CRD0314A

Secure component (X) to panels 40, 42, 1 using screws (N).

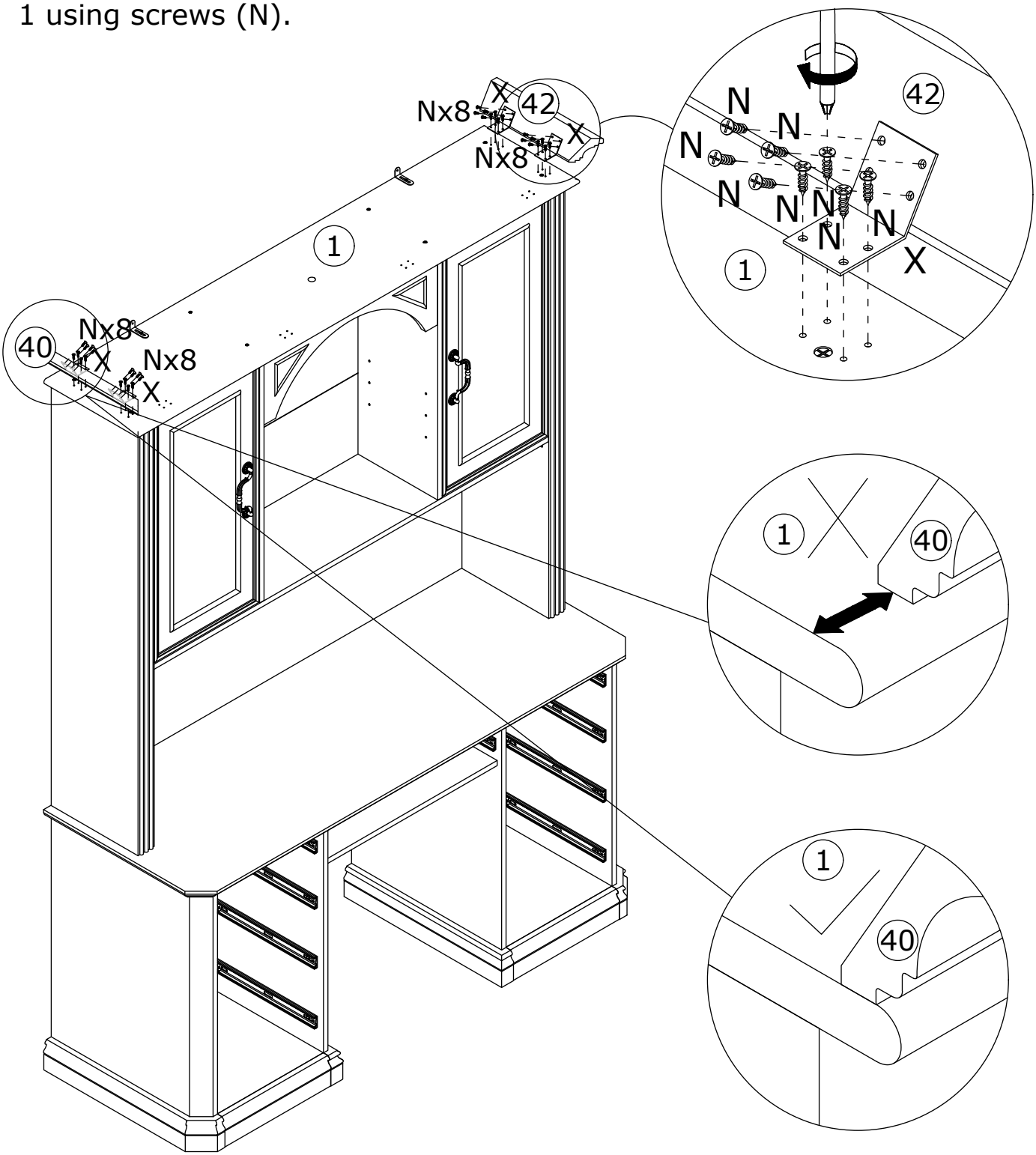

42

N x 32	X x 4	
CRD3514A		

	M	N	U
	CRD3512A	CRD3514A	CRD0314A

Secure component (X) to panels 41, 1 using screws (N).

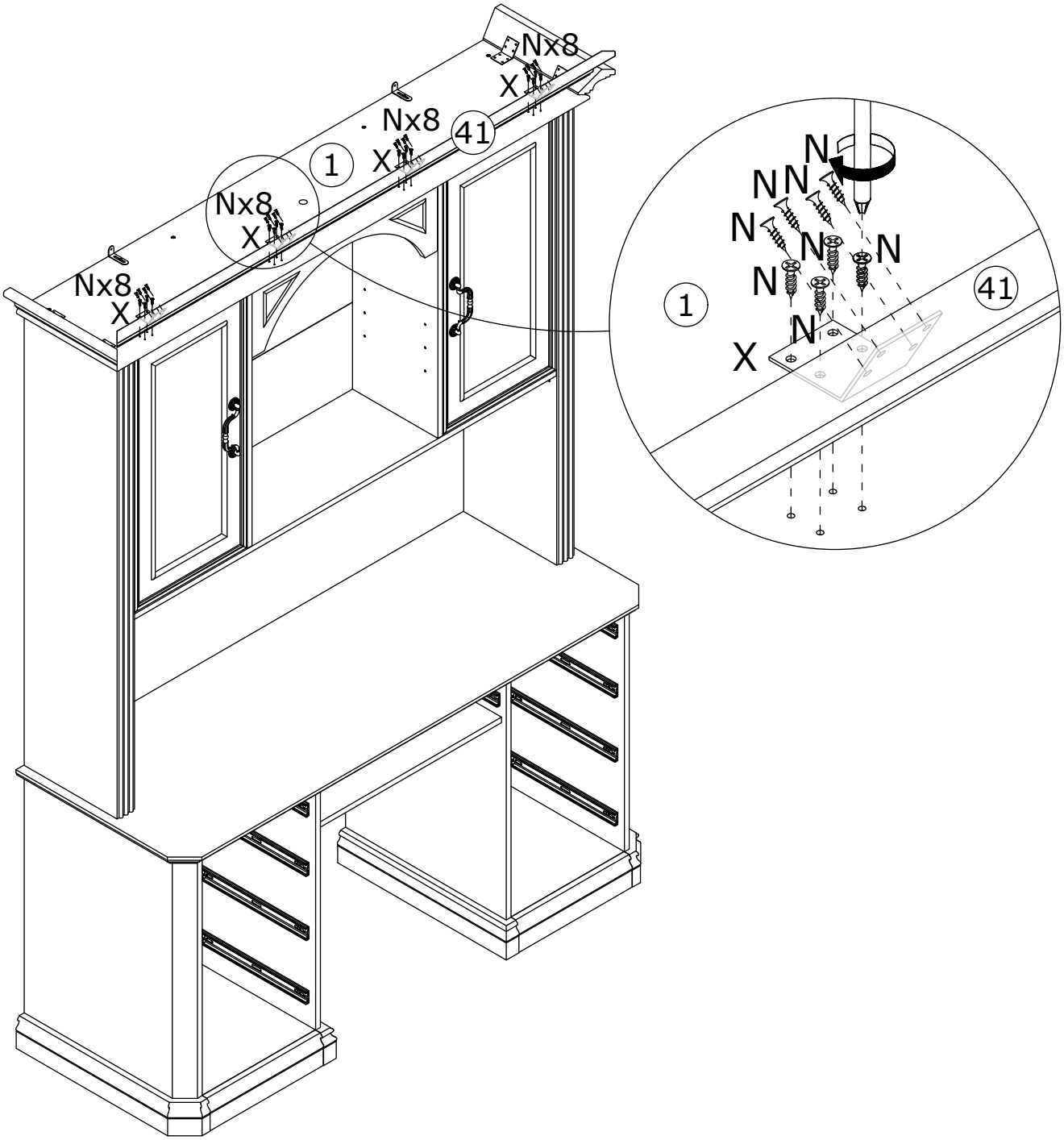

43

N x 8	Y x 2	
CRD3514A		

	M	N	U
	CRD3512A	CRD3514A	CRD0314A

Secure component (X) to panels 40, 42, 41 using screws (N).

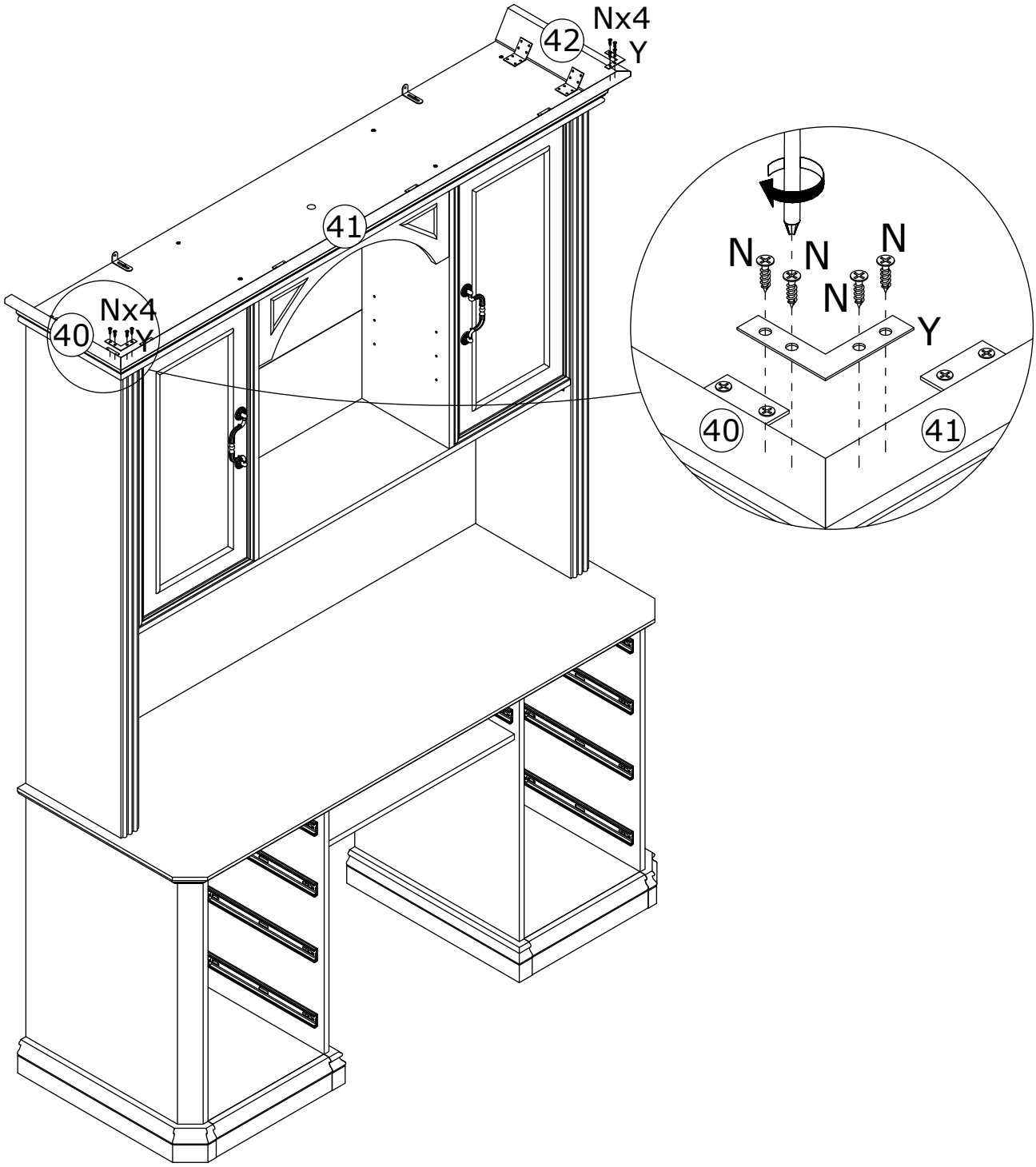

44

A x 37	B x 37	
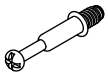 CRA0635B		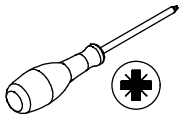

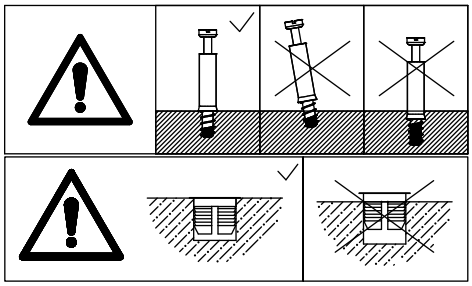

First install plug (B) onto panels 23, 24, and 25.
Then screw the self-tapping rod (A) into.

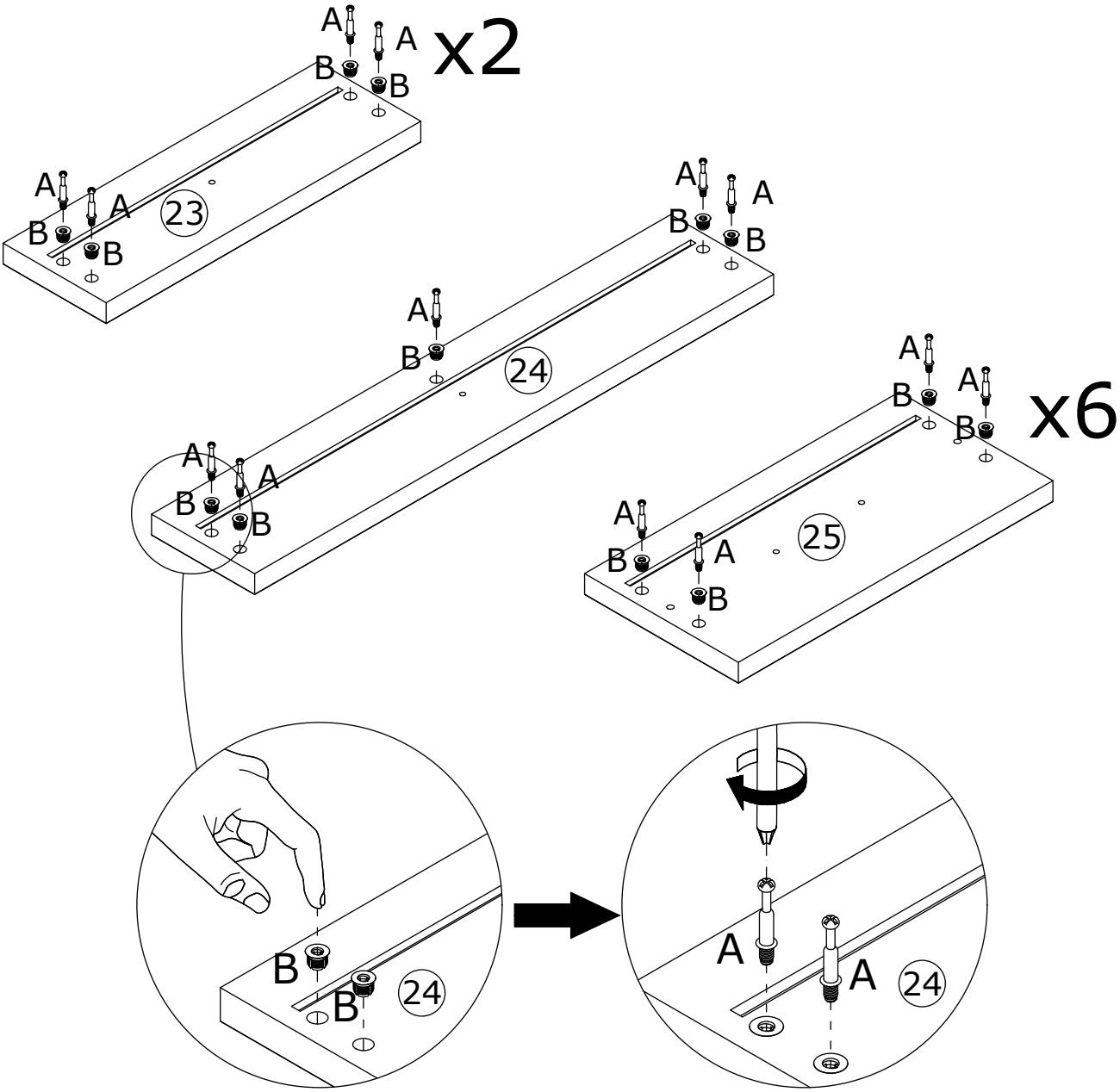

45

C x 37	D x 12	
CRB1595A	CRF0630A	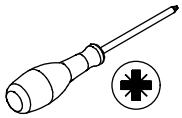

Connect panels 26 and 27 to panel 23, panels 26, 27, and 39 to panel 24, panels 32 and 33 to panel 25, then put the eccentric wheel (C) and tighten by turning clockwise.

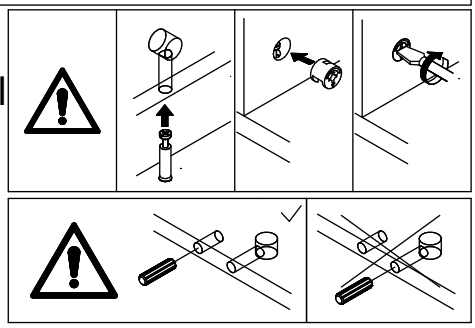

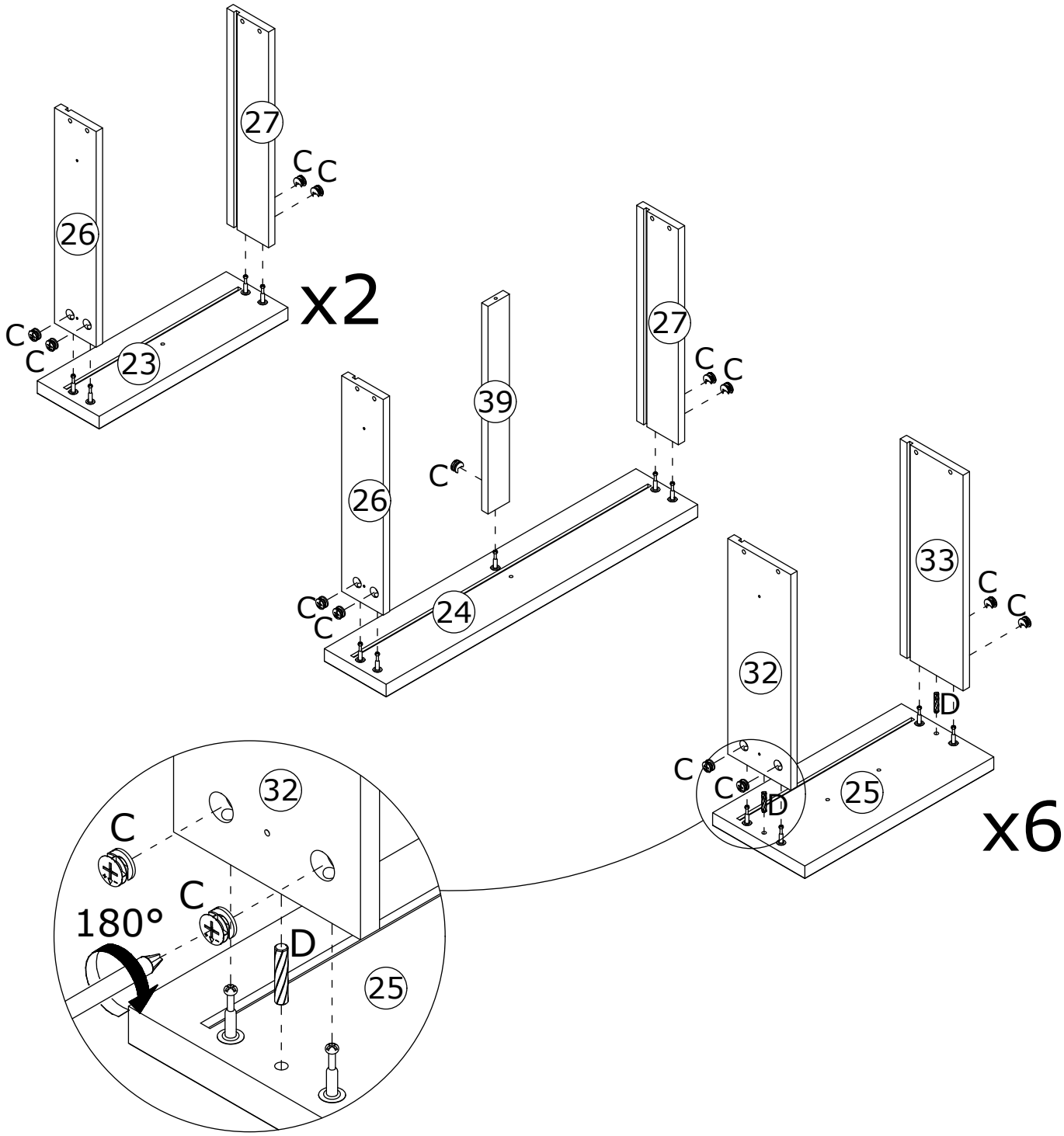

46

Insert panels 30 and 31 into the available slots.

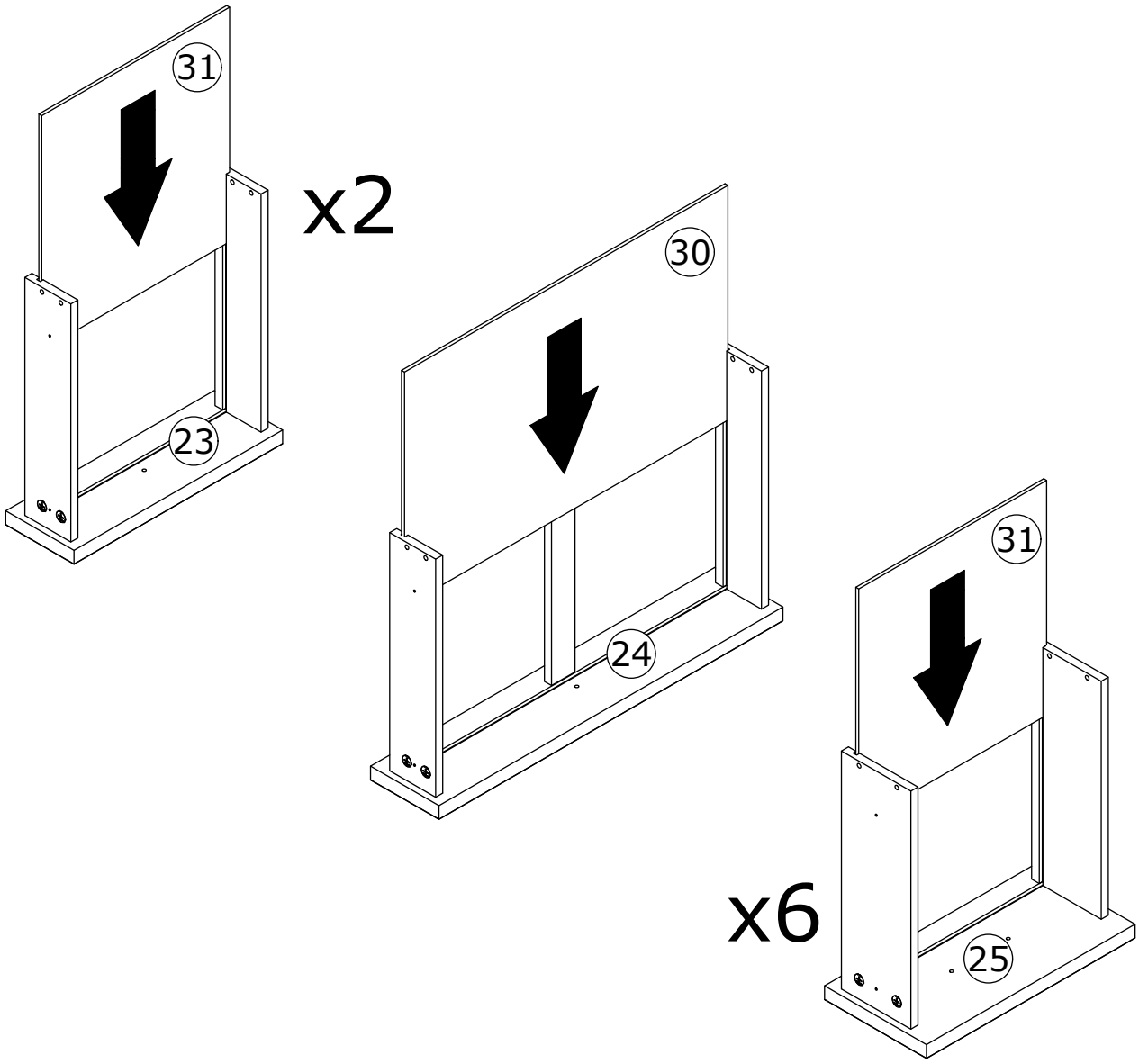

47

F x 37

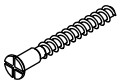

CRC0540A

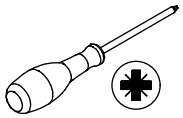

Secure panels 26 and 27 to panel 28, panels 26, 27 and 39 to panel 29, panels 32 and 33 to panel 34 using screws (F) .

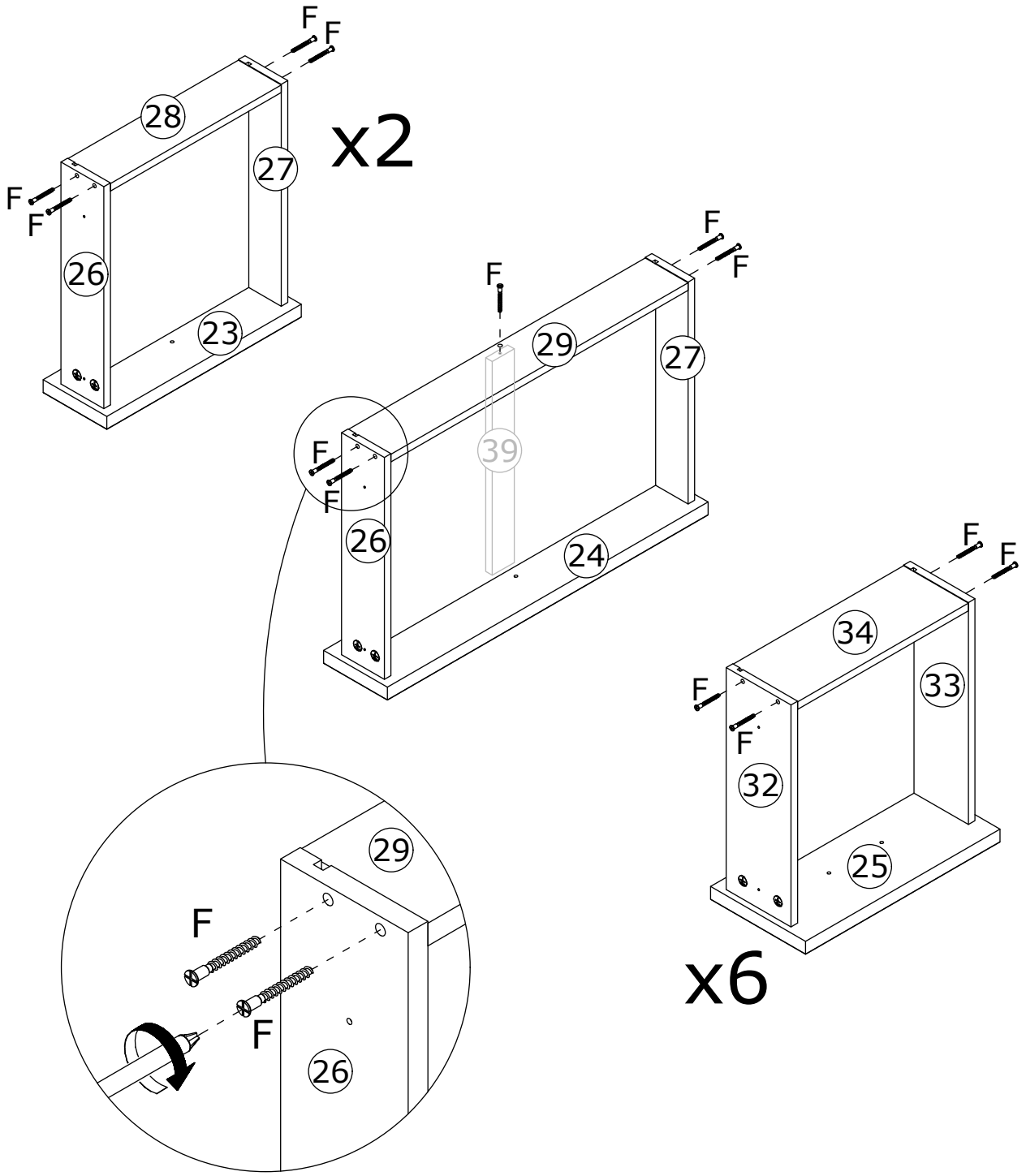

48

L x 9	M x 36	
L-2 L-2 #3508 14''	CRD3512A	

	M	N	U
	CRD3512A	CRD3514A	CRD0314A

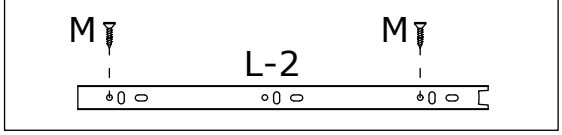

Secure slide rail (L-2) to panels 26, 27, 32, and 33 using screws (M).

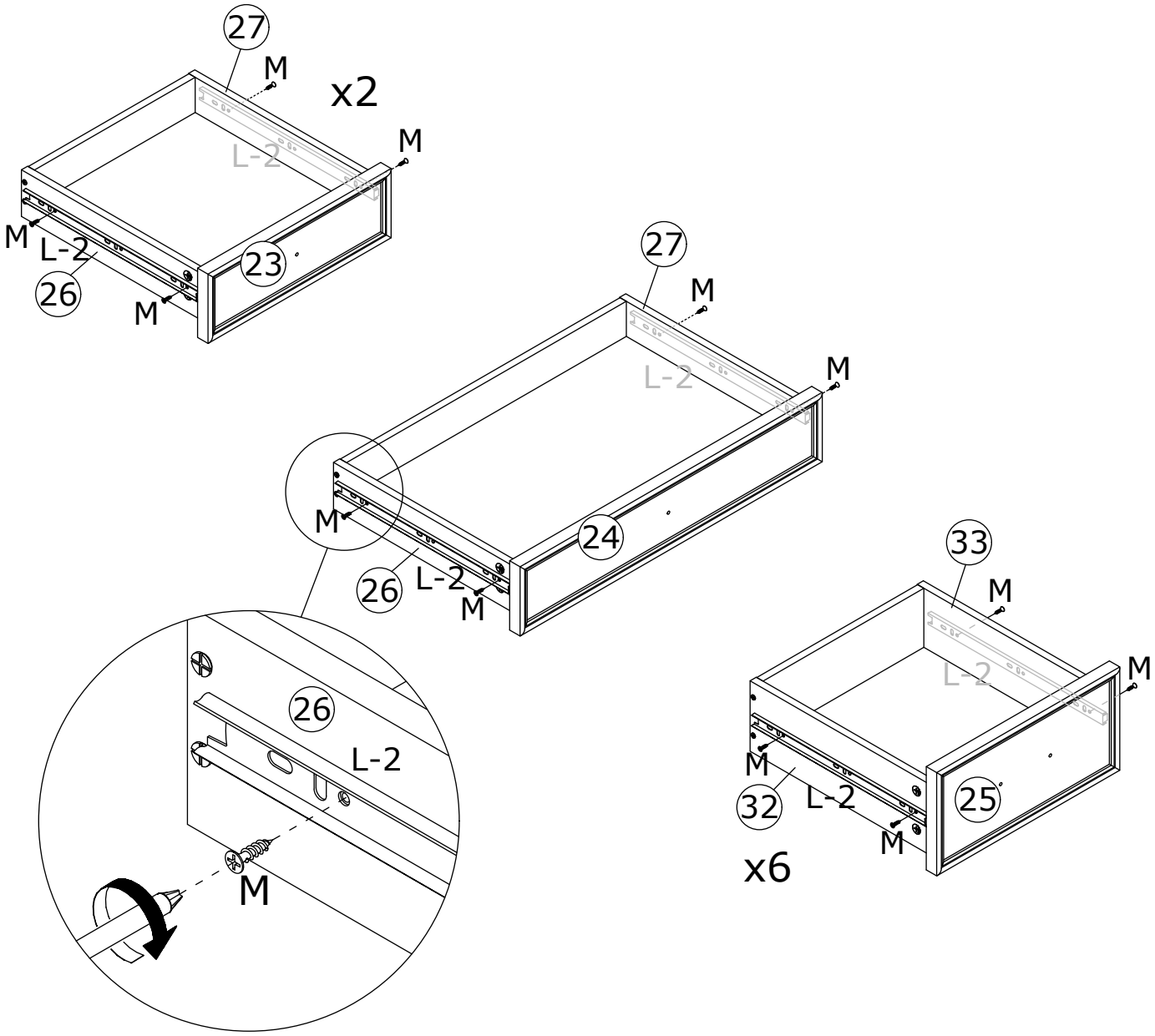

49

G x 3	H x 6	J x 15	
	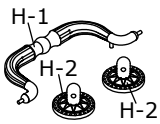	CRE0418A	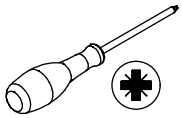

Secure handle (H) and (G) to panels 25, 23 and 24 using screws (J).

Note: Pay attention to the installation orientation of handle (H-1).

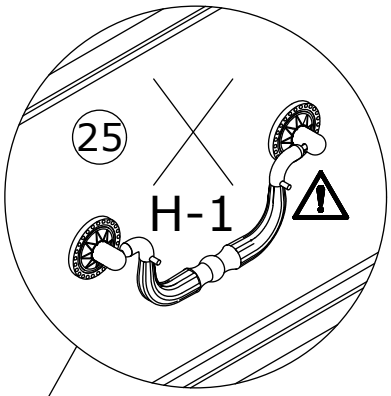

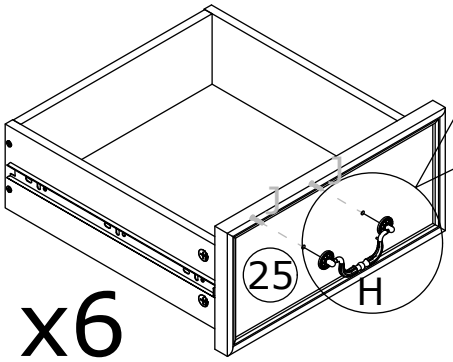

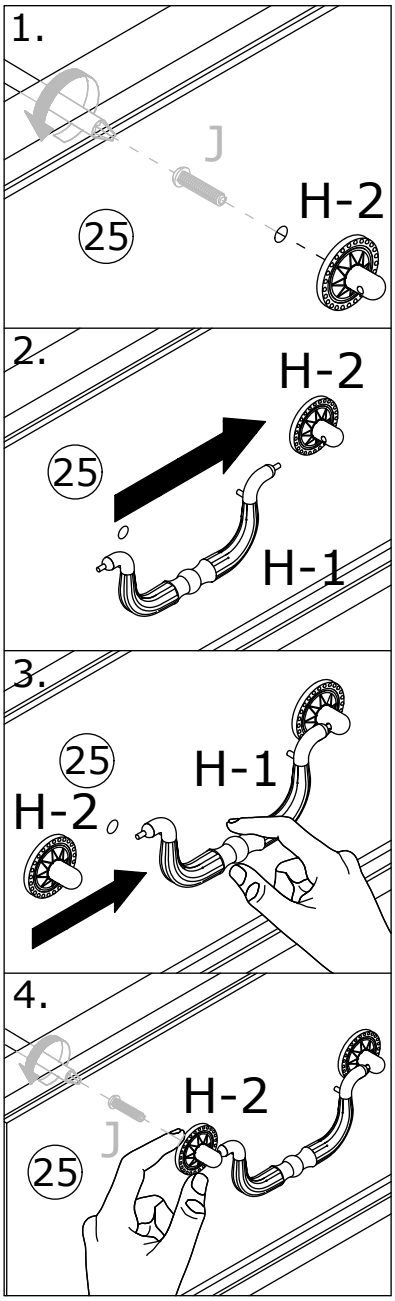

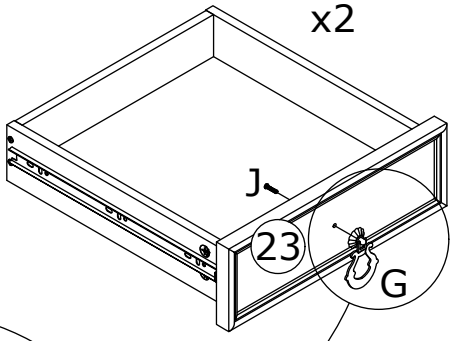

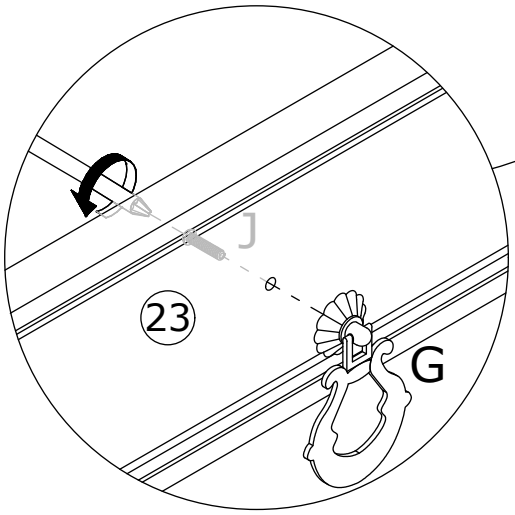

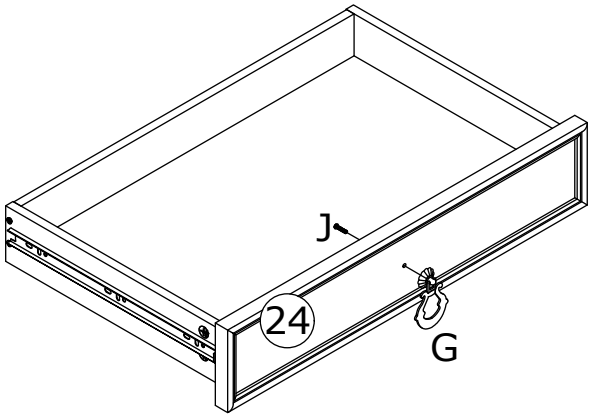

50

Isnert the drawers to the main unit.

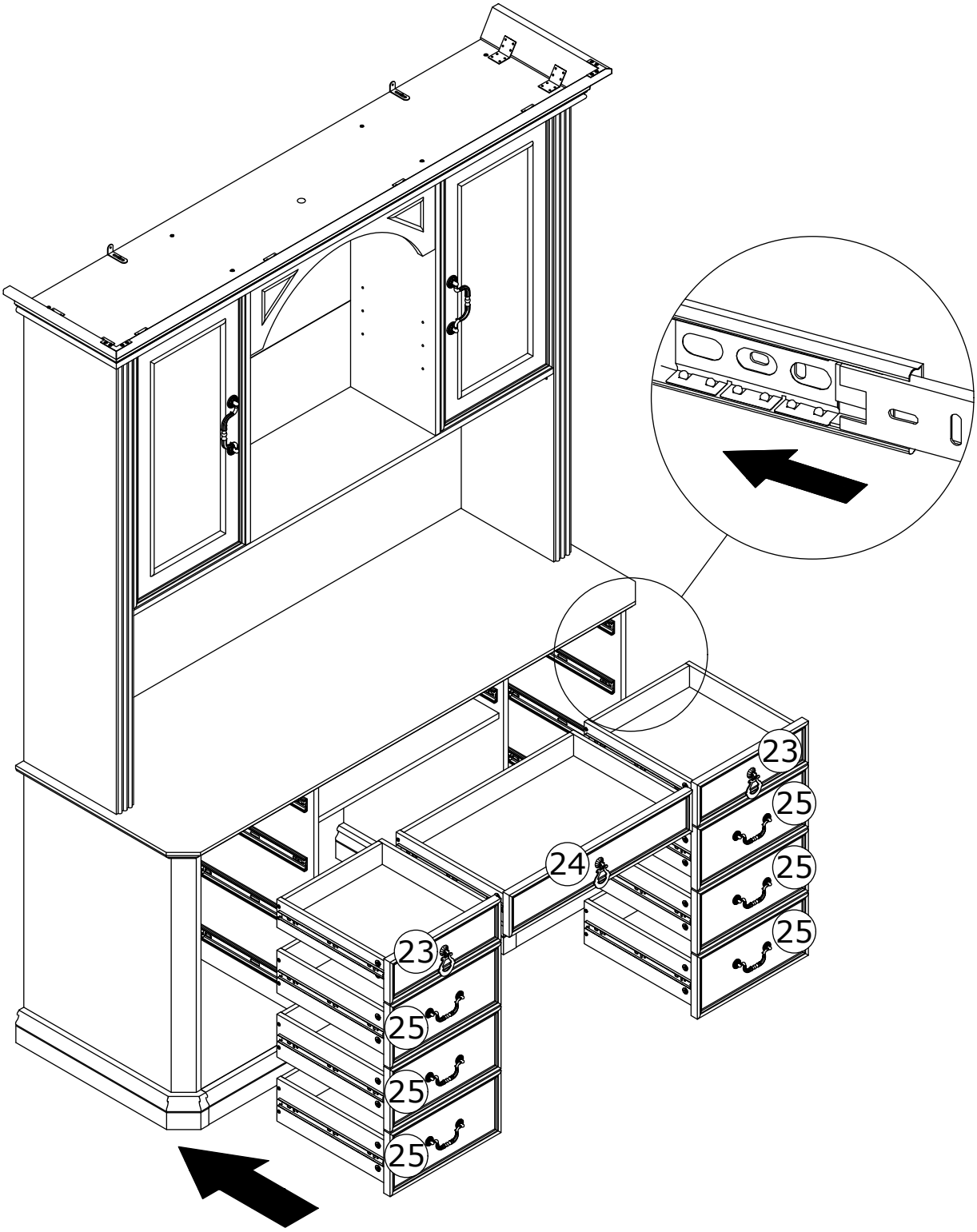

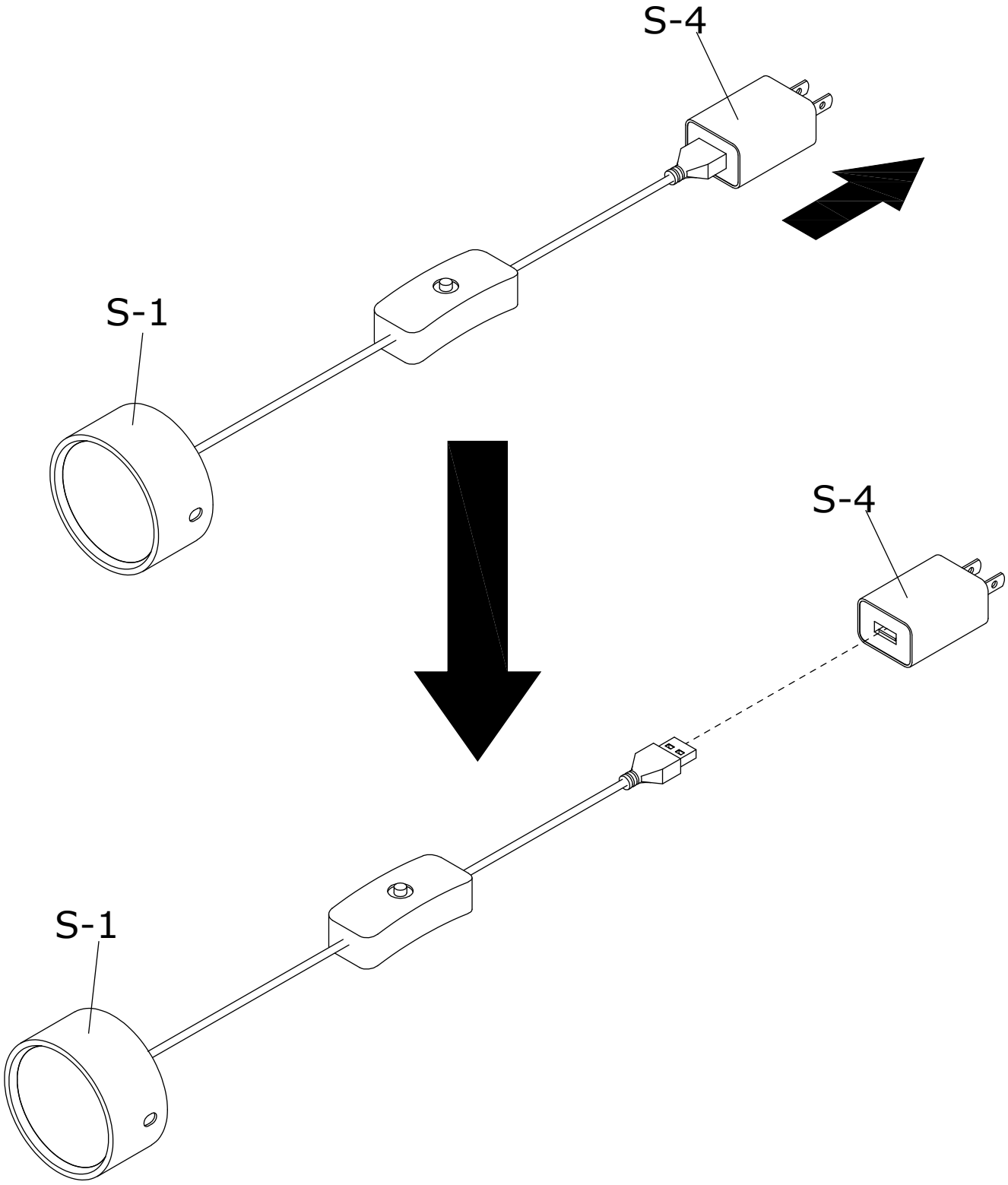
S-4
S-1
S-4
S-1

51

N x 2	S x 1	
CRD3514A	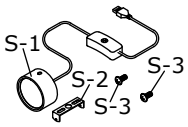	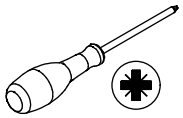

	M	N	U
	CRD3512A	CRD3514A	CRD0314A

Attach component (S) to panel 1 using screws (N).

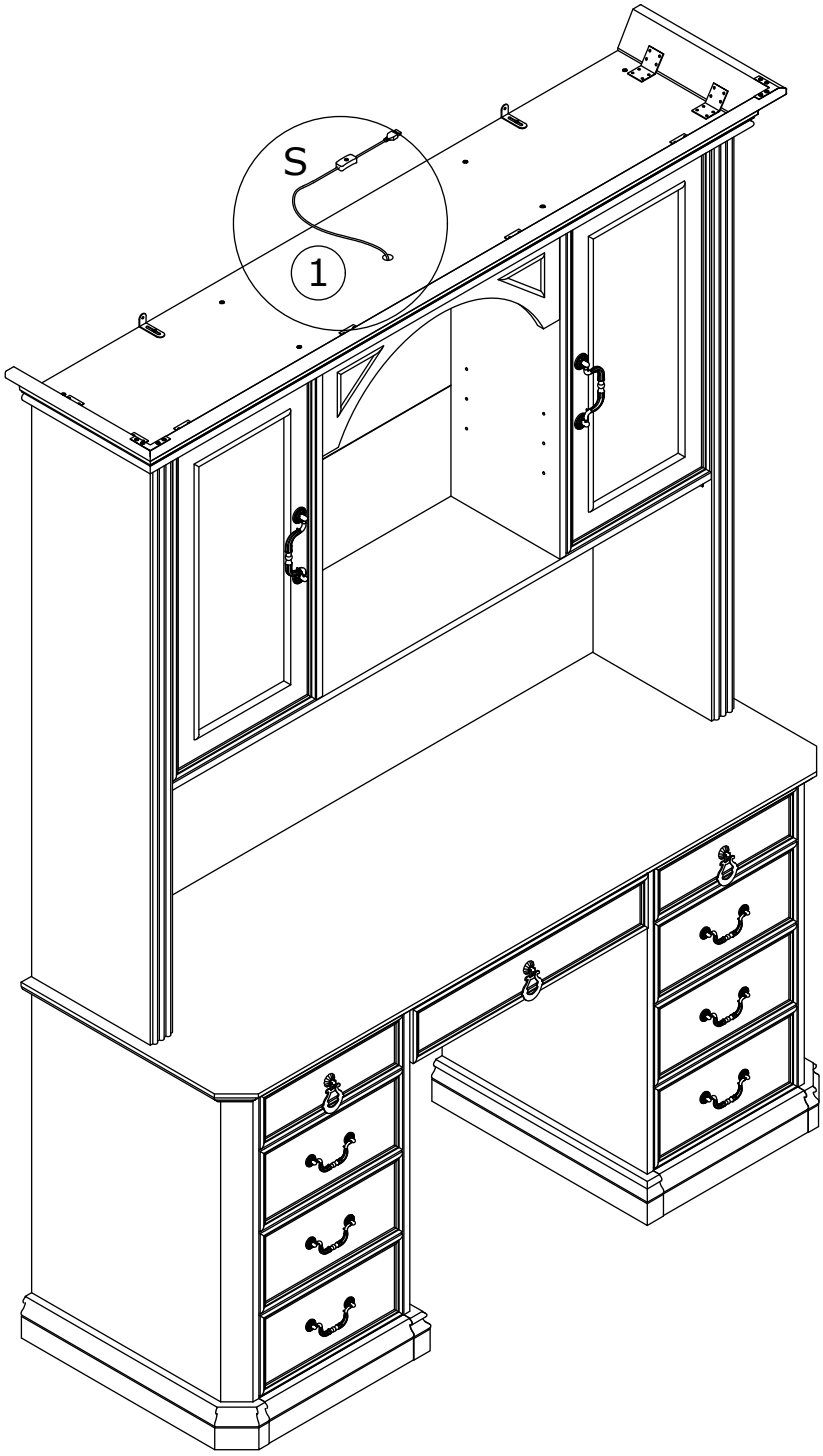

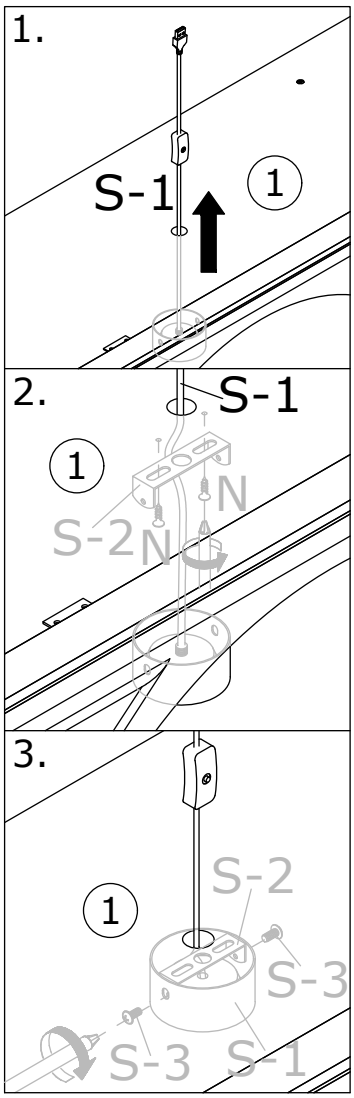

52

E x 4

Insert layer pins (E) onto panels 4 and 5.

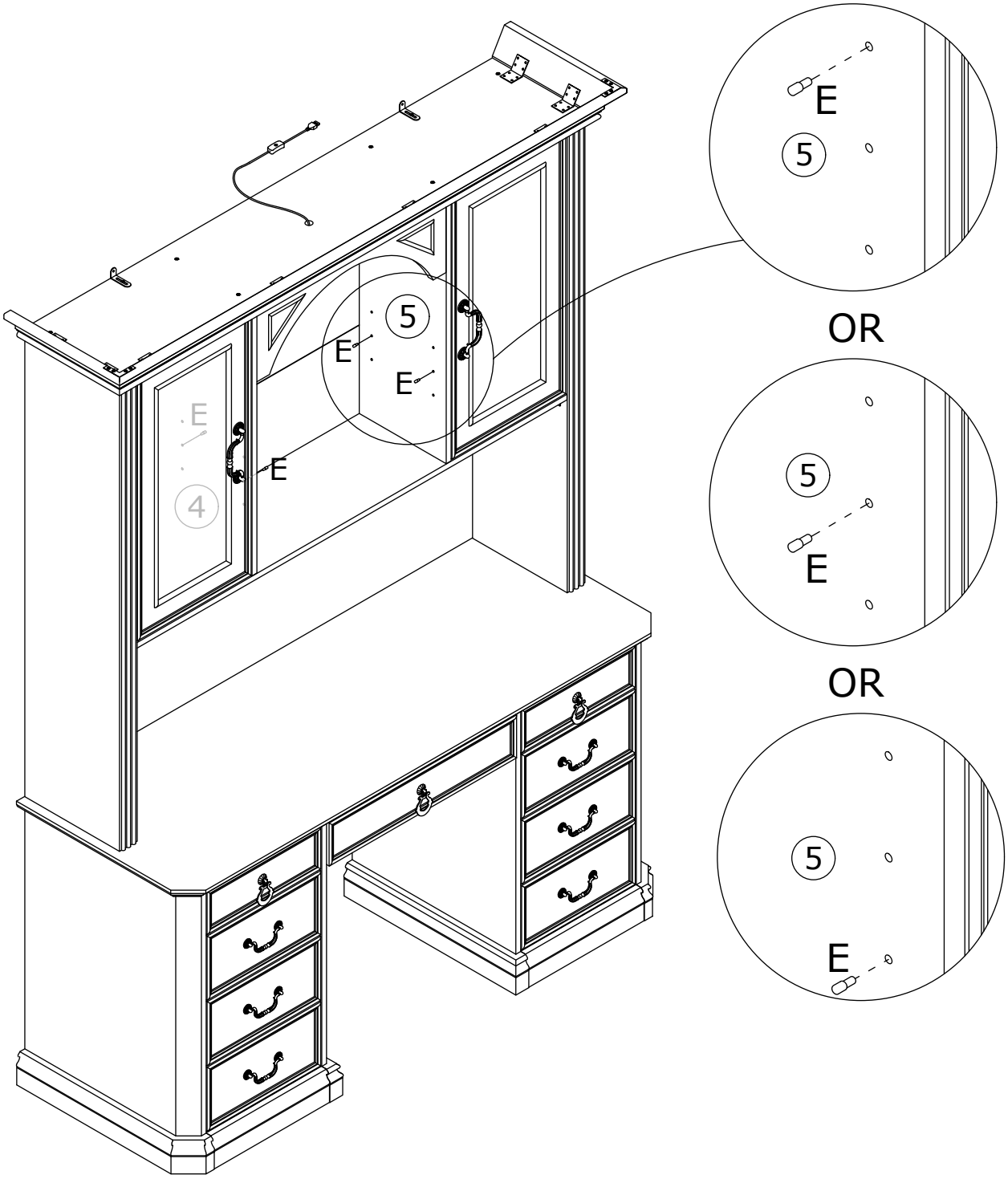

53

Place panel 9 to the main body.

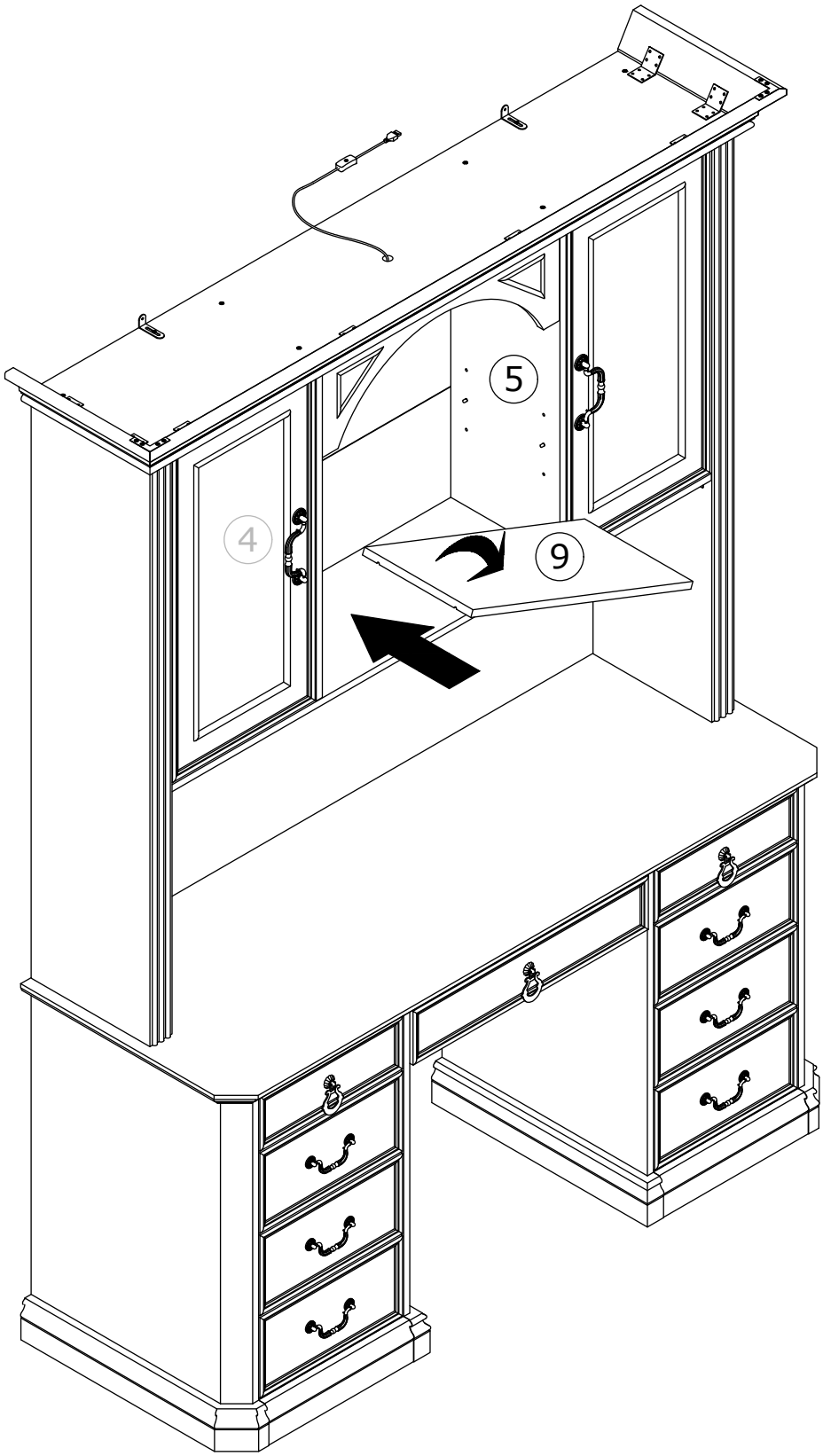

54

S x 1

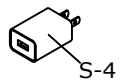

Connect component (S) to the power supply.

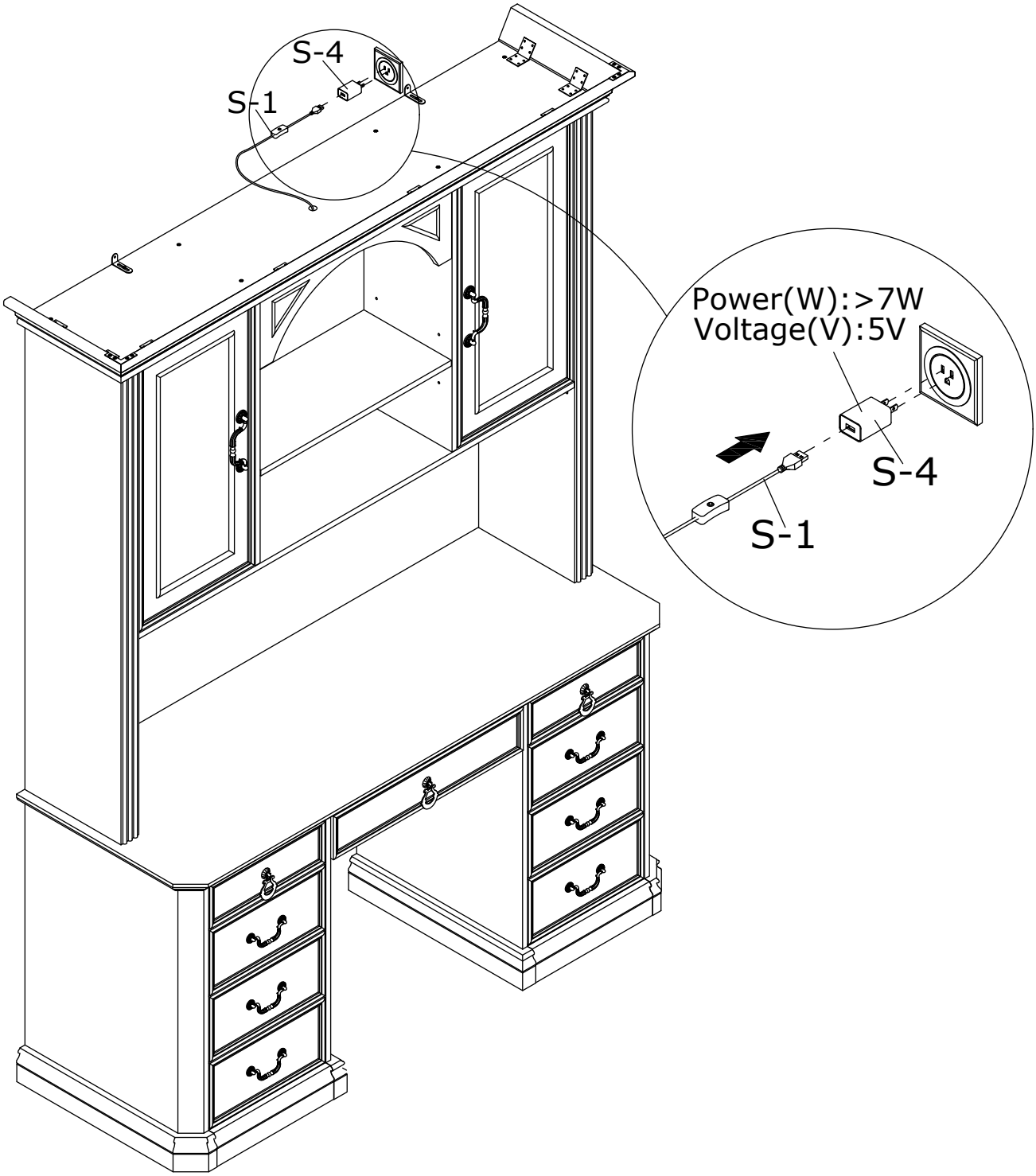

55

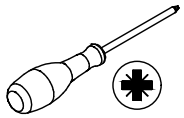

The hinges on the doors can be adjusted to line the doors up exactly.

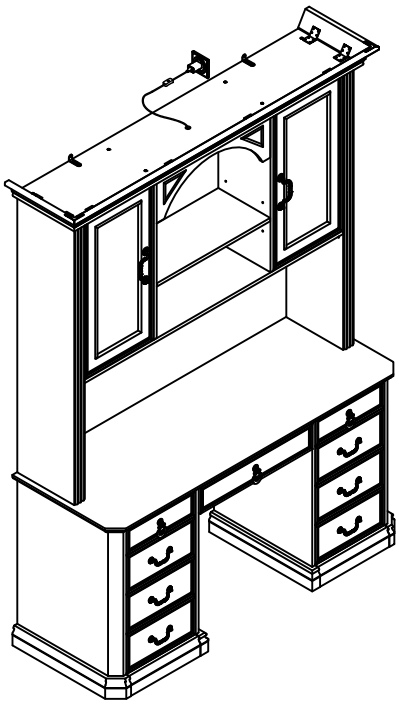

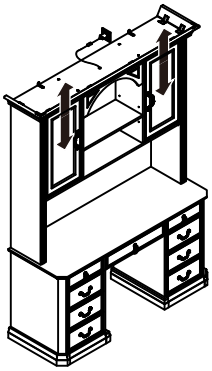

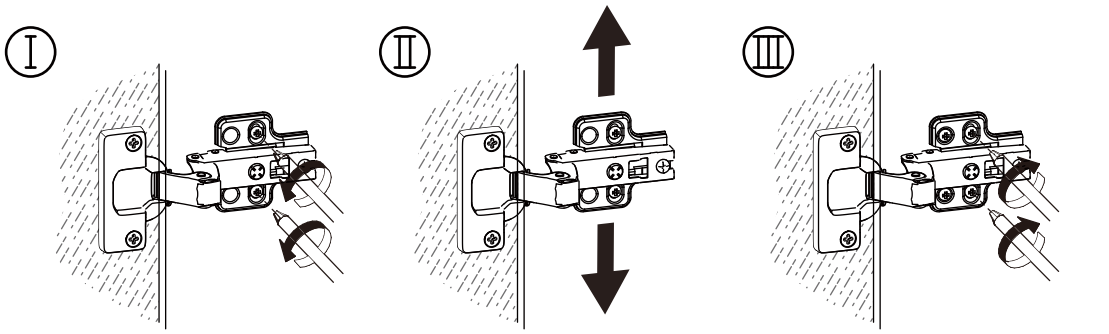

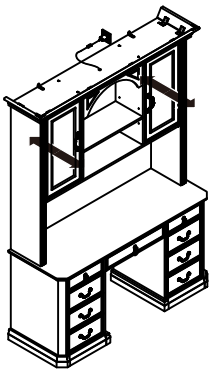

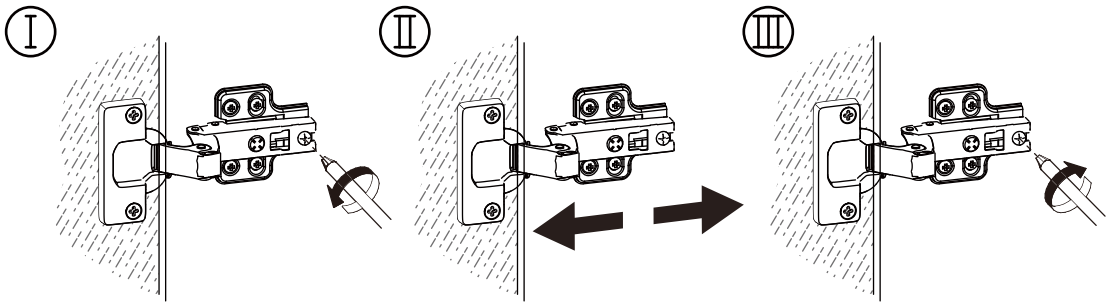

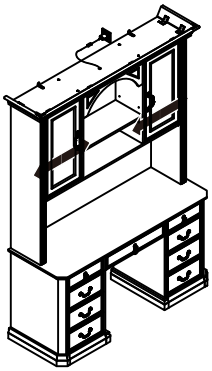

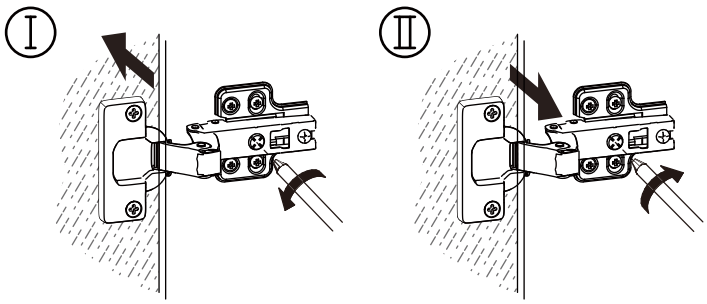

WARRANTY

WARRANTY CLAIMS

- There is a 30-day warranty for broken furniture or any other problems that do not work properly. The warranty will start from the date of purchase which must be verified by proof of purchase.

- Before making a claim, we may be able to answer your query, simply call us. Please leave your purchase order number, along with some details of the problem, if you want a replacement part. We will arrange within 48 hours. If there is out of stock, we will reply with a shipping date.

- The product must be used in accordance with the instructions provided. For health reasons.

- For other reasons, if the furniture needs to be returned, it must be cleaned and dried and operated within 30 days of receipt.

Type of Warranty Claim

- Failure to follow the furniture instructions will invalidate the warranty. Attention please.

- Does not include damage during installation, but includes damage during transportation.

Scope of responsibility

- Shall not bear any responsibility for misuse or user damage and / or loss of parts during the installation of furniture.

- After using, the damage and scratches of the furniture are not covered by the warranty.

The Warranty Relates to All Bought in The Us and Covers The Following Areas

- Sheet parts: 1 month from the date of purchase.

- Electrical parts: 1 month from the date of purchase.

RETURNS

CHANGED YOUR MIND AND NEED TO RETURN YOU ITEM?

PLEASE FOLLOW THE BELOW INSTRUCTIONS:

- If you have purchased and have simply changed your mind, follow the retailer's instructions for returns.

DEFECTIVE ITEMS

- If your item is defective in any way, i.e. it doesn't work but you can't identify why, in the first instance, please call us.

DAMAGED ITEMS

- If you receive an order with obvious shipping damage from the retailer, then we suggest the delivery is refused. If the delivery has been accepted and then shipping damage is found, please follow the specific instructions advised by the retailer.
  In all circumstances please save all packaging material and paperwork for the order. Please be aware that if you dispose of packaging material or attempt to return the merchandise without contacting the fulfiller, you jeopardise your chances of making a claim, and you may not receive a credit for the return.