Assembly Instructions

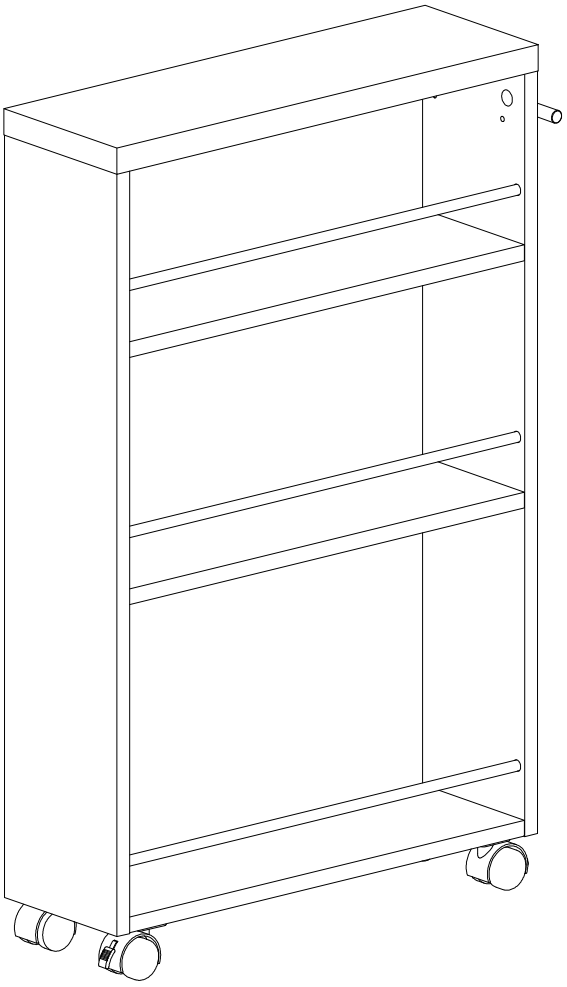

Wine Cabinet

Model No.

HOGA-XK00438 /HOGA-XK00505
HOGA-XK00757

Contact Us

We're here to help you.



Your satisfaction is our top priority. If you encounter any issues with this product, such as missing or damaged parts, we're here to help. Please retain the original packaging and take photos of the packaging and the product, then contact us as soon as possible.

Warm Tips

1. Carefully read these instructions and keep them for future reference.
2. Check the parts list and confirm everything's there before starting assembly.
3. When assembling, put all parts on a soft, smooth surface like a carpet to avoid scratches.
4. Don't fully tighten screws until all parts are confirmed in place to avoid misalignment.

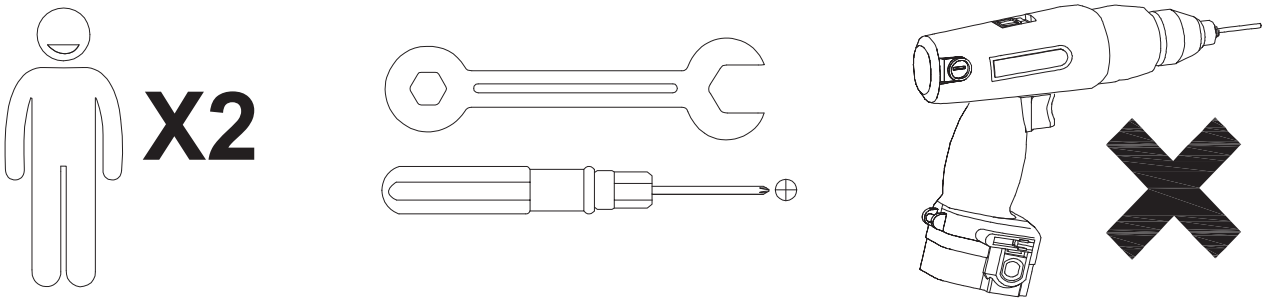

We recommend using hand tools for assembly.

If an electric screwdriver is used, reduce power and torque to avoid damage to the product.

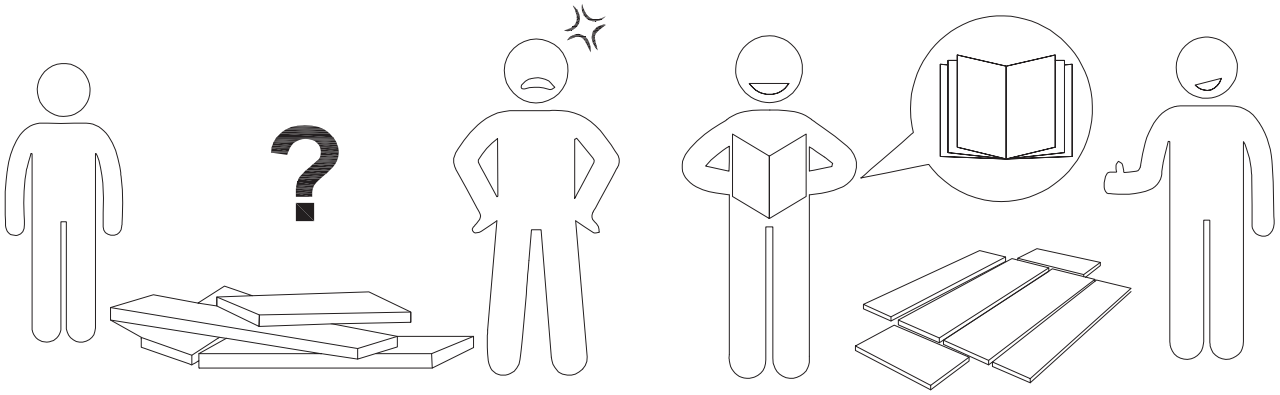

AVOID SCRATCHES

In order to avoid scratching, this furniture should be assembled on a soft surface, such as a rug.

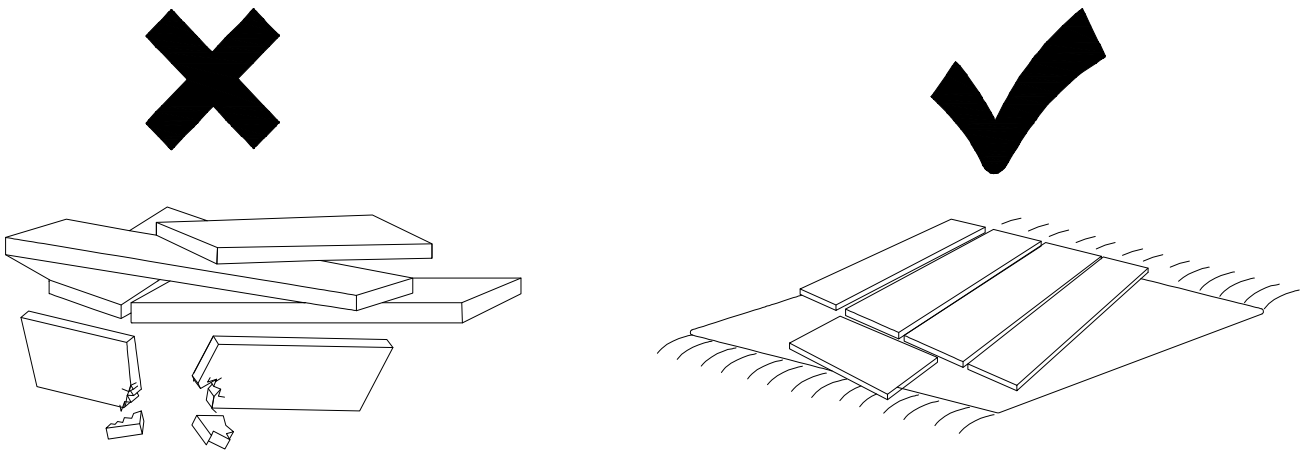

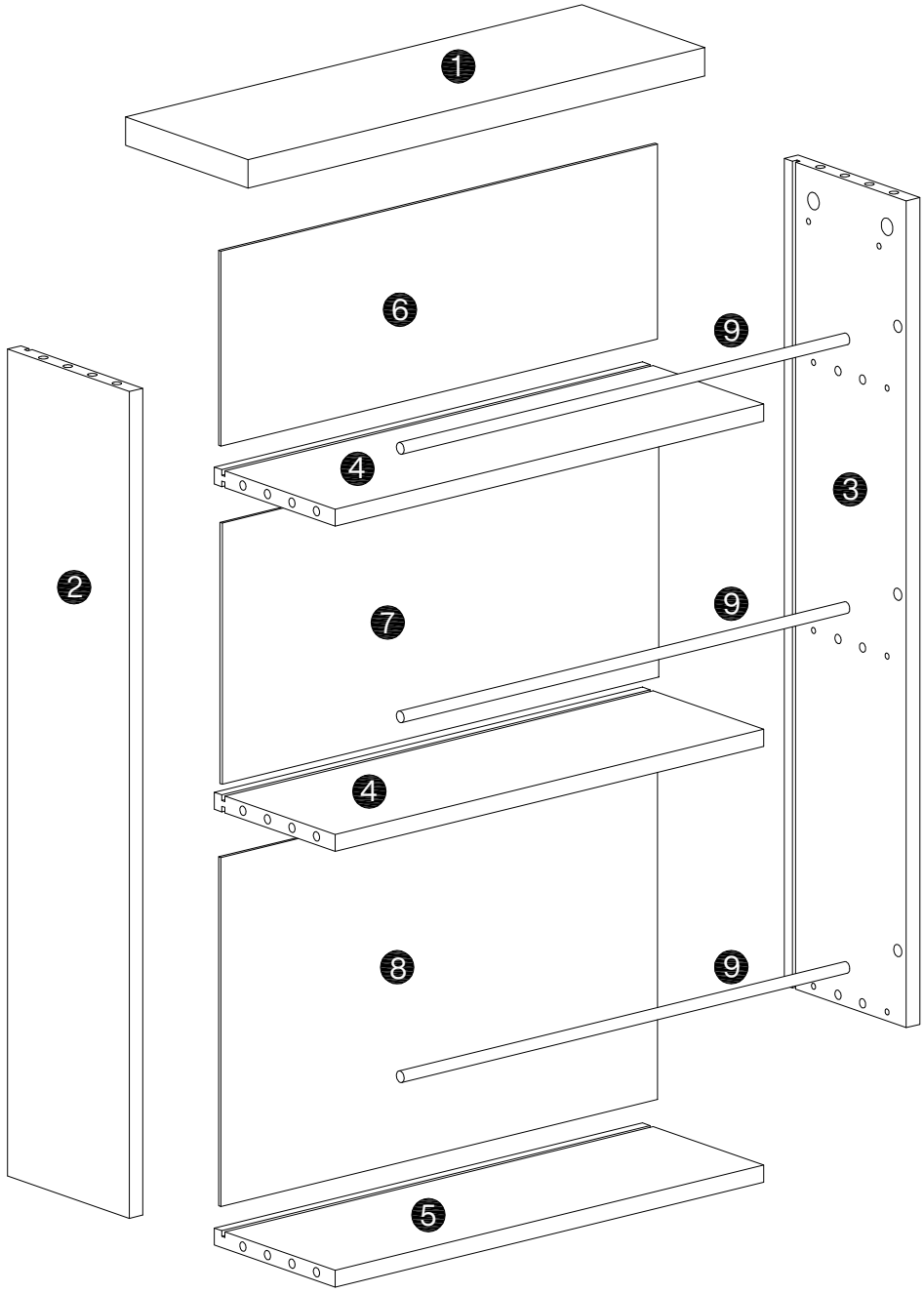

⚠ Caution

Make sure all parts are included. Most board parts are labeled or stamped on the raw edge.
Contact us for a free replacement if you encounter any damaged or missing parts.

Parts List

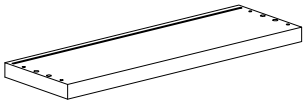

❶ 1 pc

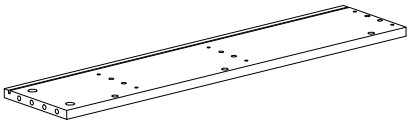

❷ 1 pc

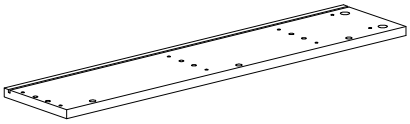

❸ 1 pc

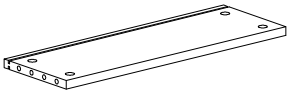

❹ 2 pcs

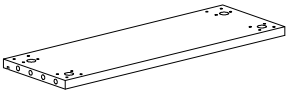

❺ 1 pc

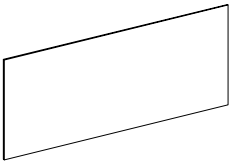

❻ 1 pc

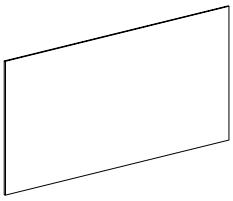

❼ 1 pc

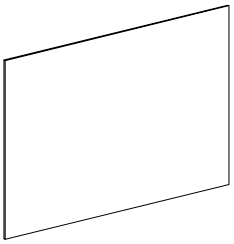

❽ 1 pc

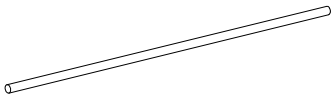

❾ 3 pcs

Hardware List

A	X16+1	B	X16+1	C	X16+1	D	X16+1
		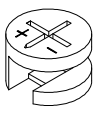				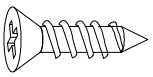	
Ø6X35 mm		Ø15X12 mm		Ø8X30 mm		Ø3.5X14 mm	

E	X2+1	F	X1	G	X2	H	X2
		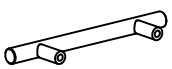		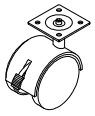		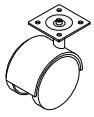	
M4X22 mm		150X32X12 mm		Ø38 mm		Ø38 mm	

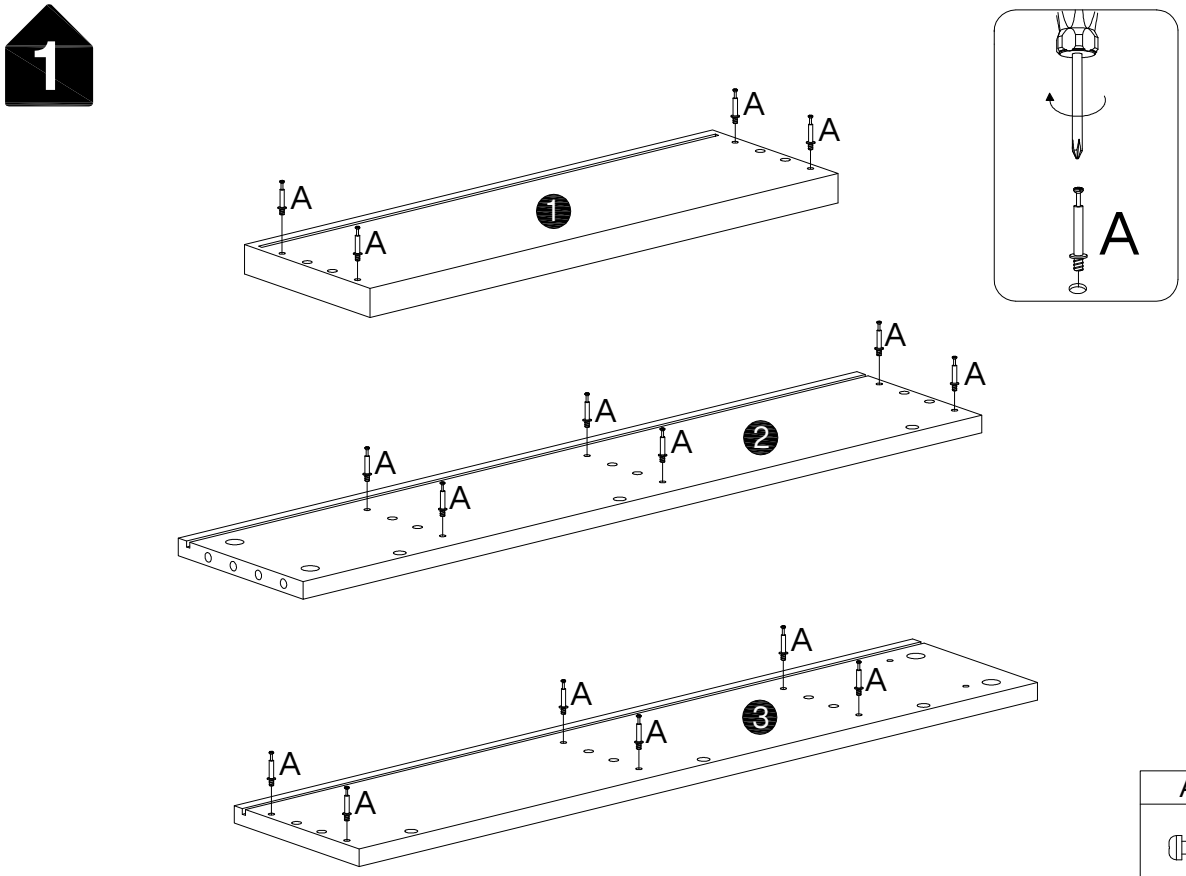

A	X16
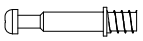	
Ø6X35 mm	

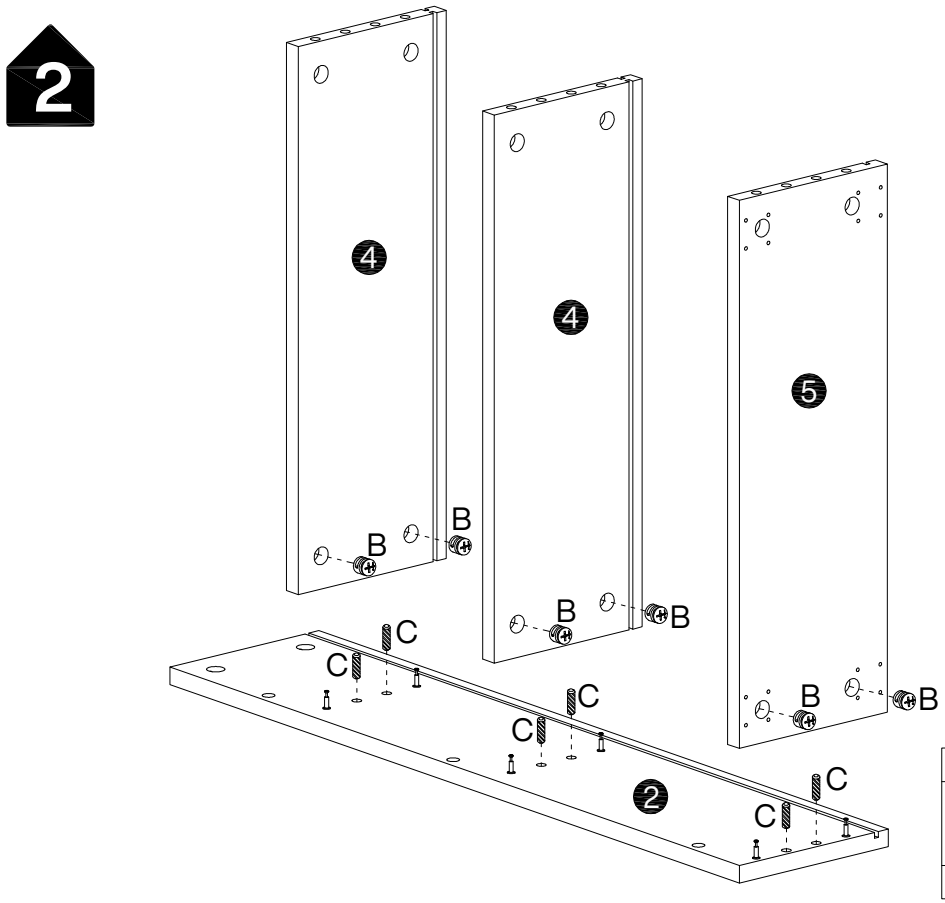

B	X6	C	X6
			
Ø15X12 mm		Ø8X30 mm	

3

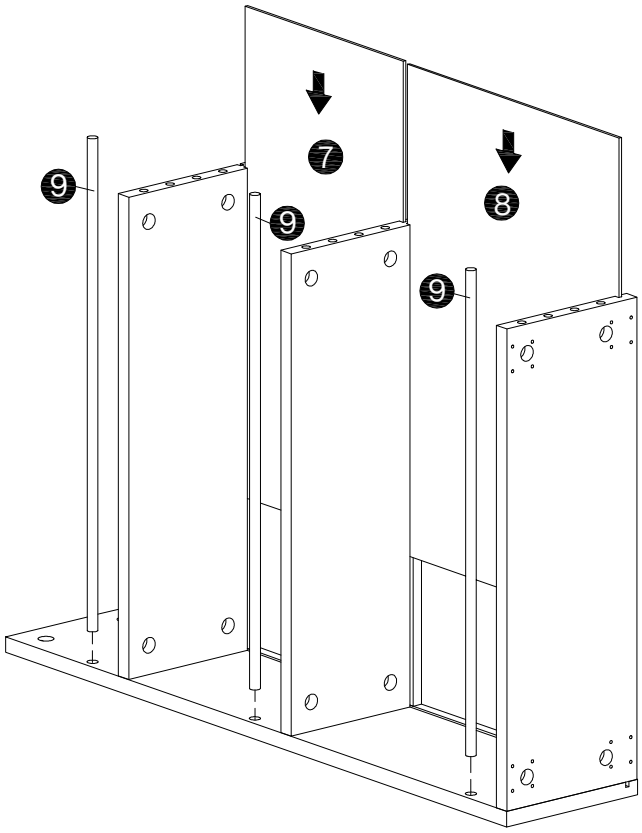

4

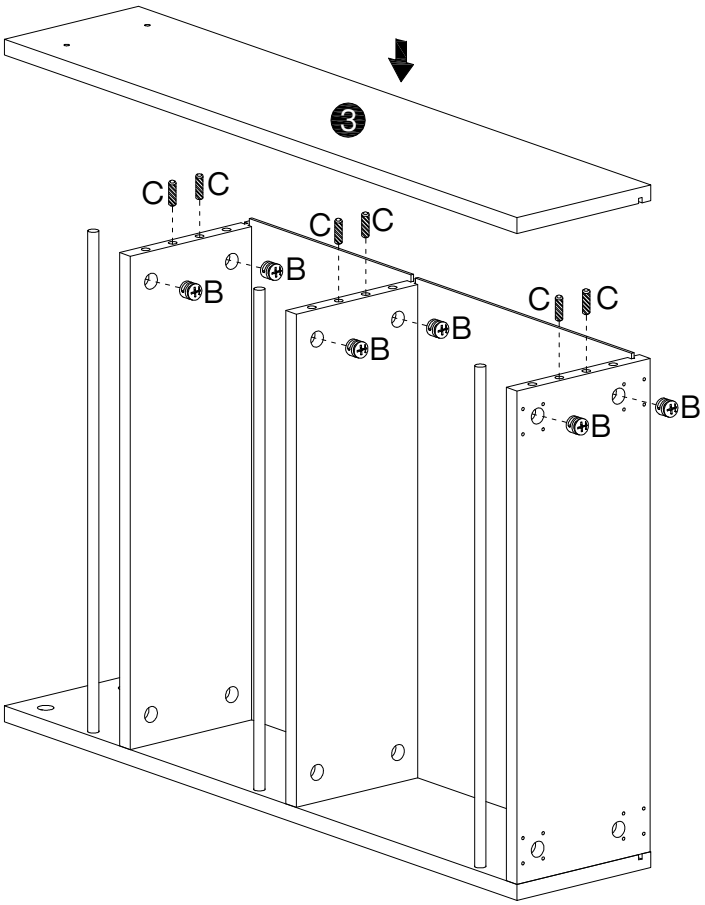

B	X6	C	X6
			
Ø15X12 mm		Ø8X30 mm	

5

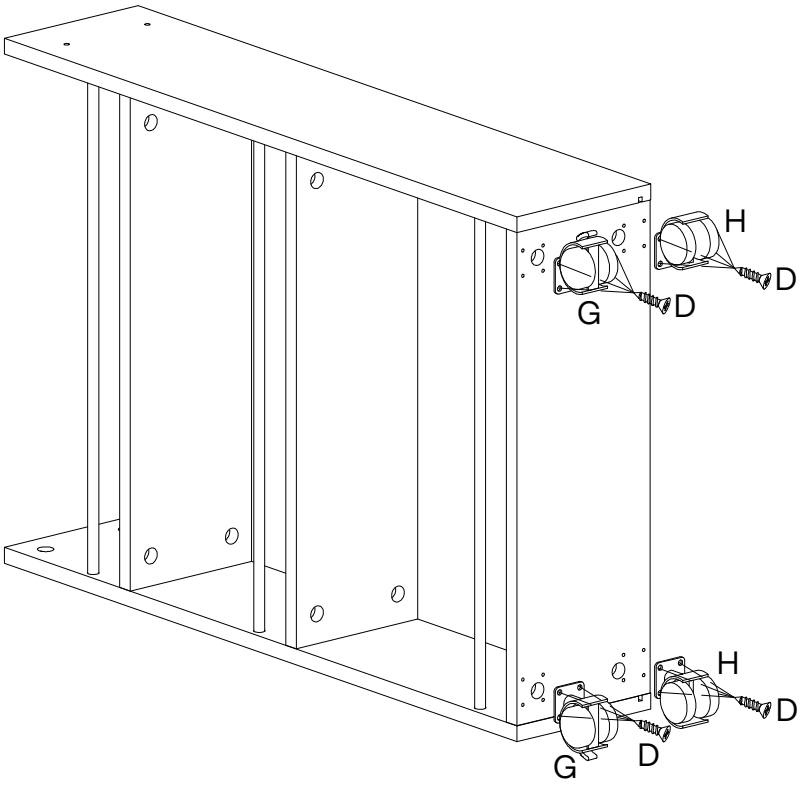

D	X16	G	X2	H	X2
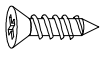					
Ø3.5X14 mm		Ø38 mm		Ø38 mm	

6

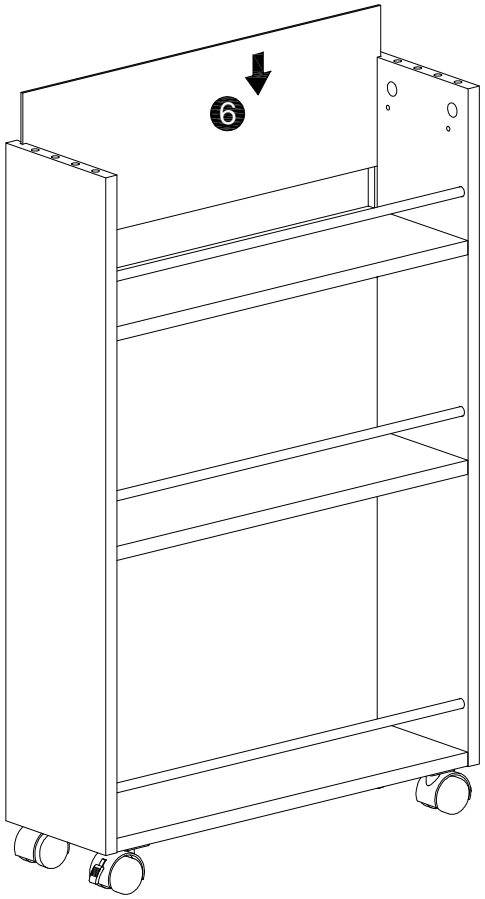

7

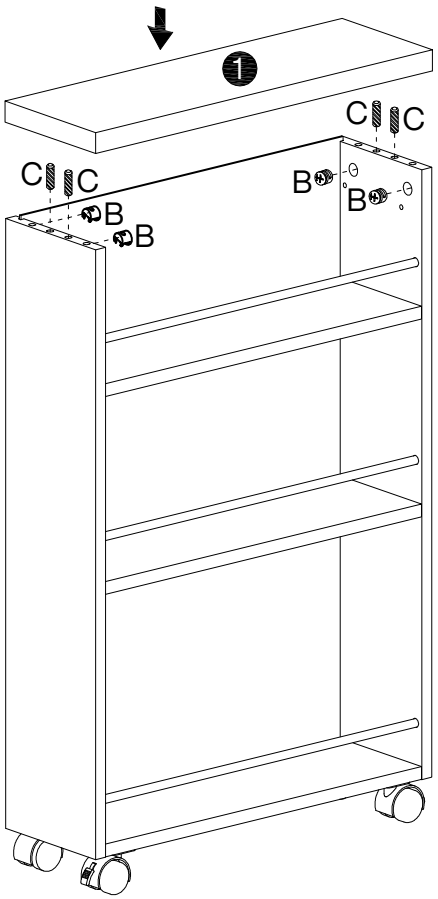

B	X4	C	X4
			
Ø15X12 mm		Ø8X30 mm	

8

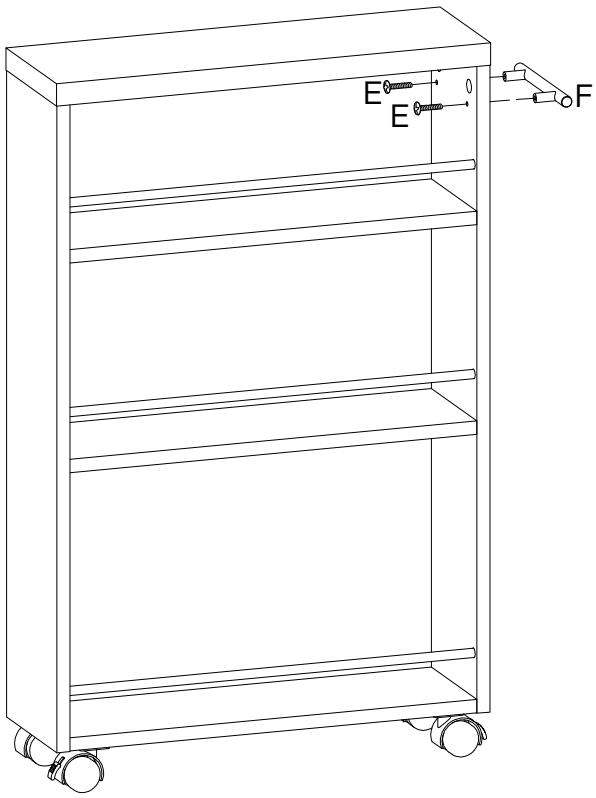

E	X2	F	X1
			
M4X22 mm		150X32X12 mm	

Thank you for your support!

