ASSEMBLY INSTRUCTIONS
24INCH BATH VANITY (COMBO)



Thank you for purchasing this quality product. Be sure to check all packing material carefully for small parts which may have come loose inside the carton during shipment. Separate, identify and count all parts and hardware. Compare with the parts list to be sure all parts are present.
"DO NOT TIGHTEN SCREWS UNTIL COMPLETELY ASSEMBLED"

*** Use of power tool to assemble this product will invalidate any claim and damage this product making unsafe!!!**
*** Please assemble on a clean soft surface to avoid damage.**

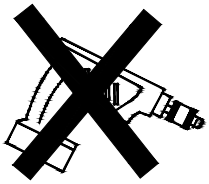

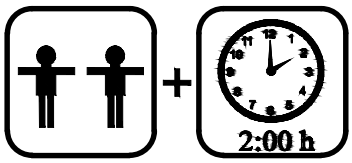

Tools Required

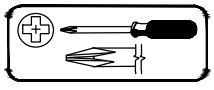

(Not Included)

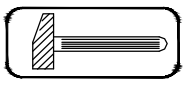

(Not Included)

IMPORTANT:
PLEASE READ INSTRUCTION BEFORE STARTING THE ASSEMBLY

PLEASE DO NOT RETURN TO STORE

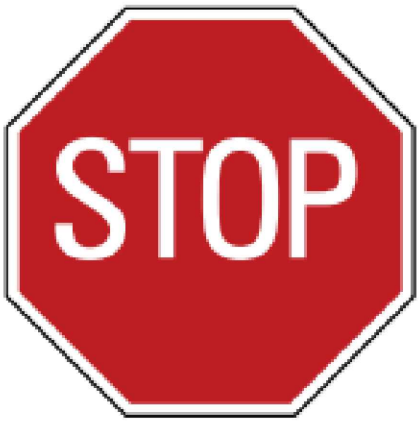

Please do not return this product to the retailer!!
We are able to assist you in ANY way

If you find that you have any trouble with assembly or missing or damaged parts please contact the seller.

Before Installation

Important - Please read these instructions fully before starting assembly

Thank you for purchasing this quality product. Be sure to check all packing materials carefully for small parts, which may have come loose inside the carton during shipment. Identify and count all items according to the PARTS LIST and/or HARDWARE LIST shown below. Check you have all the components and tools listed on the following pages.

. We recommend that you assemble this product with the assistance of another person; this will make the assembly easier, and will help eliminate damage to the product or injury to persons during assembly.

. Please do not over tighten screws or bolts until the assembly is completed.

. Keep children and animal away from the work area, small parts could choke if swallowed.

. Please put all parts on a non-abrasive floor before assembly,and follow the assembly steps to assemble your newly purchased product correctly and efficently.

If you find that you have any trouble with assembly or missing or damaged parts please contact the seller.

Cam Lock Assembly Instructions

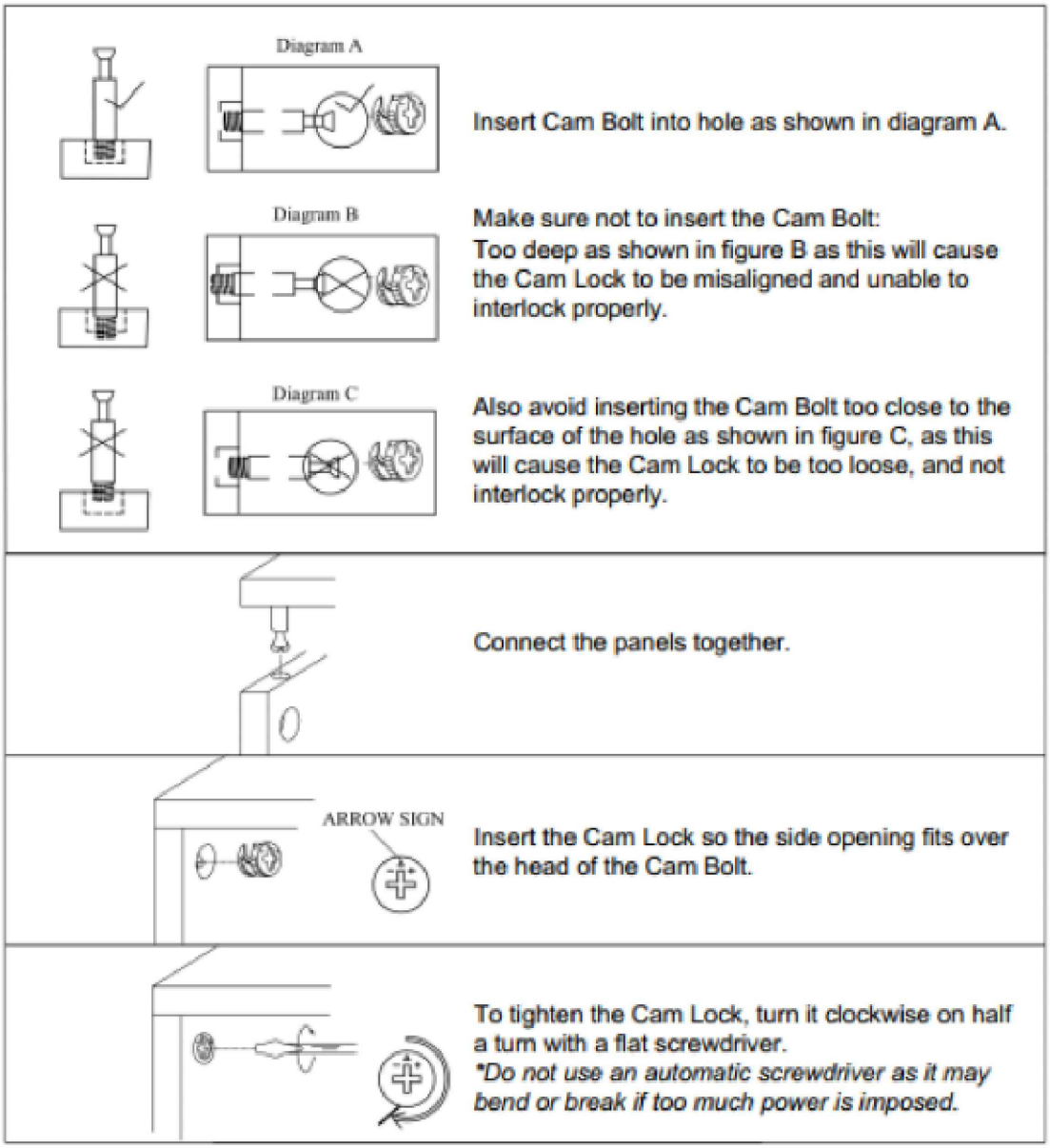

Detail View - CABINET

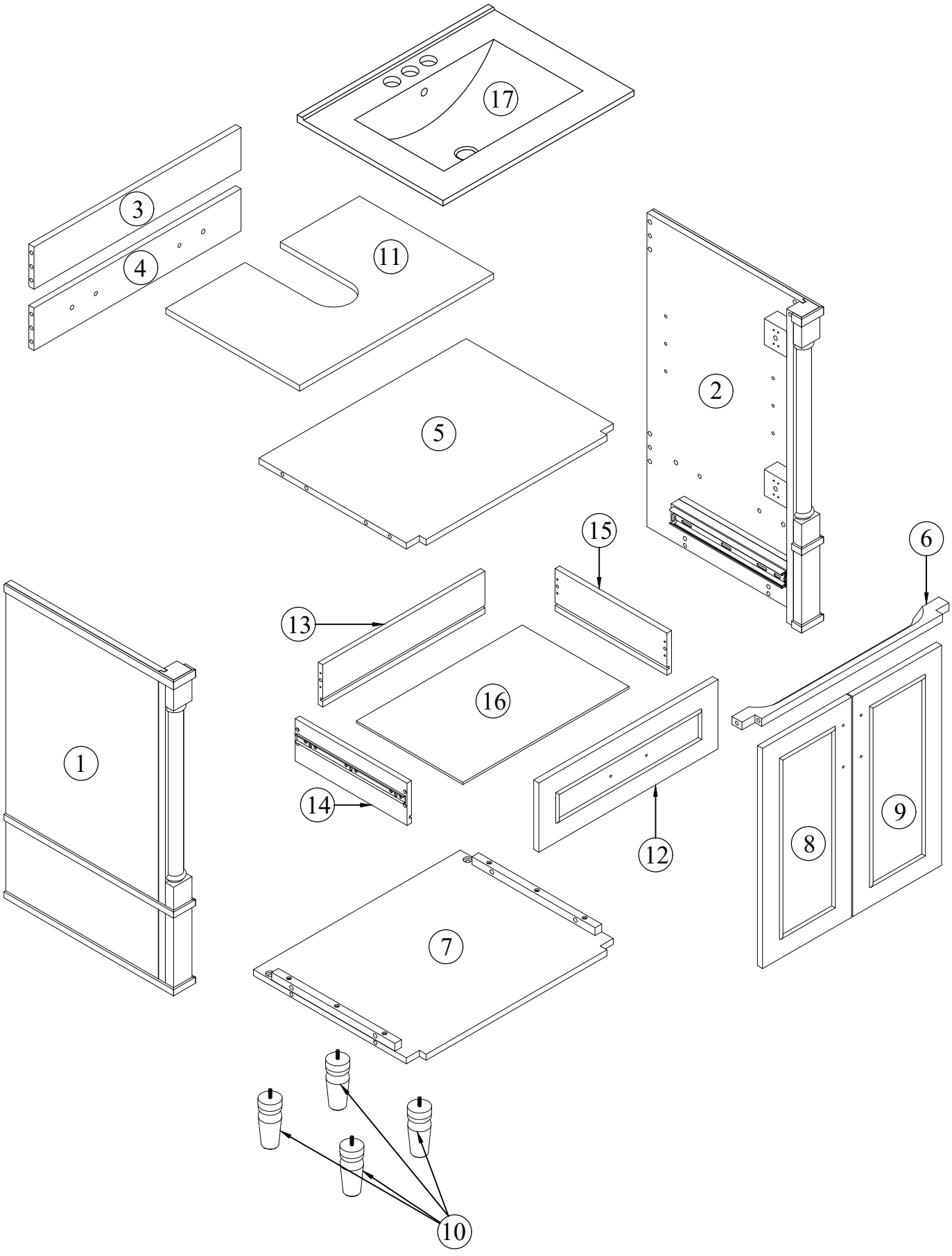

Identifying the Hardware-Identify the hardware using the illustrations below.

Part List

1 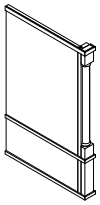 Side Panel (L) - 1pc	2 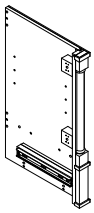 Side Panel (R) - 1pc
3 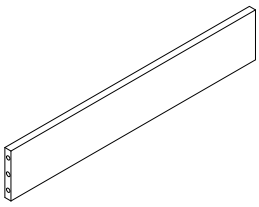 Top Panel Rear - 1pc	4 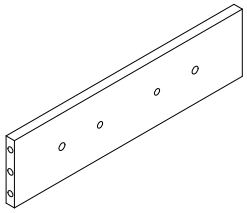 Bottom Panel Rear - 1pc
5 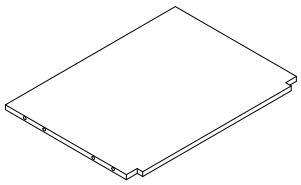 Middle partition panel - 1pc	6 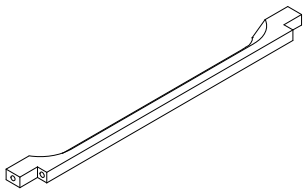 Top rail - 1pc
7 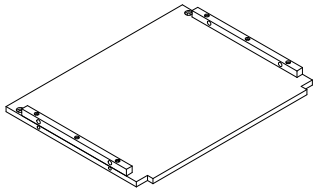 Bottom Panel - 1pc	8 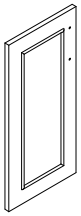 Door (L) - 1pc
9 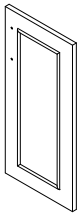 Door (R) - 1pc	10 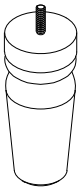 Foot - 4pcs

Part List

11 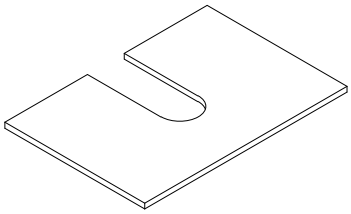 Adjustable Shelf - 1pc	12 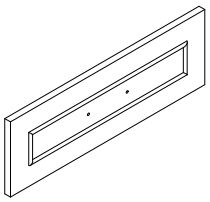 Drawer Front - 1pc
13 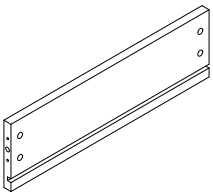 Drawer Back Panel - 1pc	14 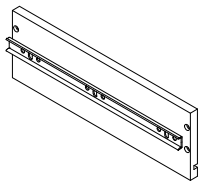 Drawer Side Panel (L) - 1pc
15 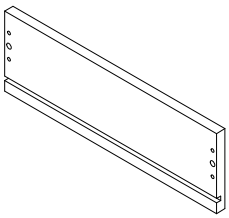 Drawer Side Panel (R) - 1pc	16 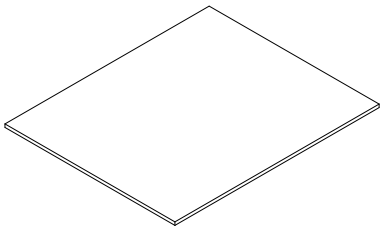 Bottom Drawer Panel - 1pc
17 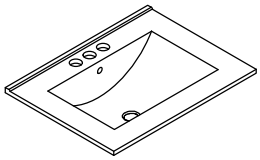 Sink - 1pc	

Hardware List

A 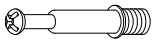 ø6x35mm	B  ø14.5x12mm	C 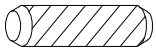 ø8x30mm
Three in one bolts(16+1pcs)	Three in one lock(16+1pcs)	Wood dowel(16+1pcs)
D 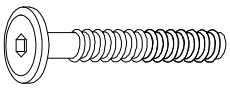 ø13x1/4"x28mm	E  ø1/4"x16x1mm	F 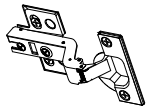
Hex-Head bolts - (4+1pcs)	Washer - (4+1pcs)	Damping hinge (4pcs)
G  ø7xø3.5x15mm	H 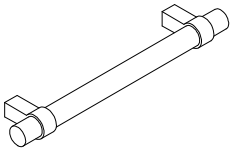	I 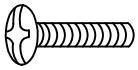 ø5/32"x20mm
Flat head screw(24+1pcs)	Handle(3pcs)	Handle screw(4+1pcs)
J 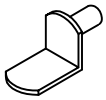	K 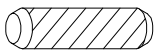 ø6x30mm	L  ø8xø4x32mm
Laminate pad(4+1pcs)	Wood dowel(4+1pcs)	Round head screw (8+1pcs)
M 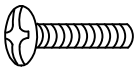 ø5/32"x28mm	N 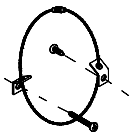	O  4mm
Handle screw(2+1pcs)	Anti fall hardware (2sets)	Allen key - 1pc

STEP: 1

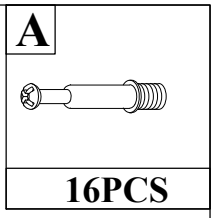

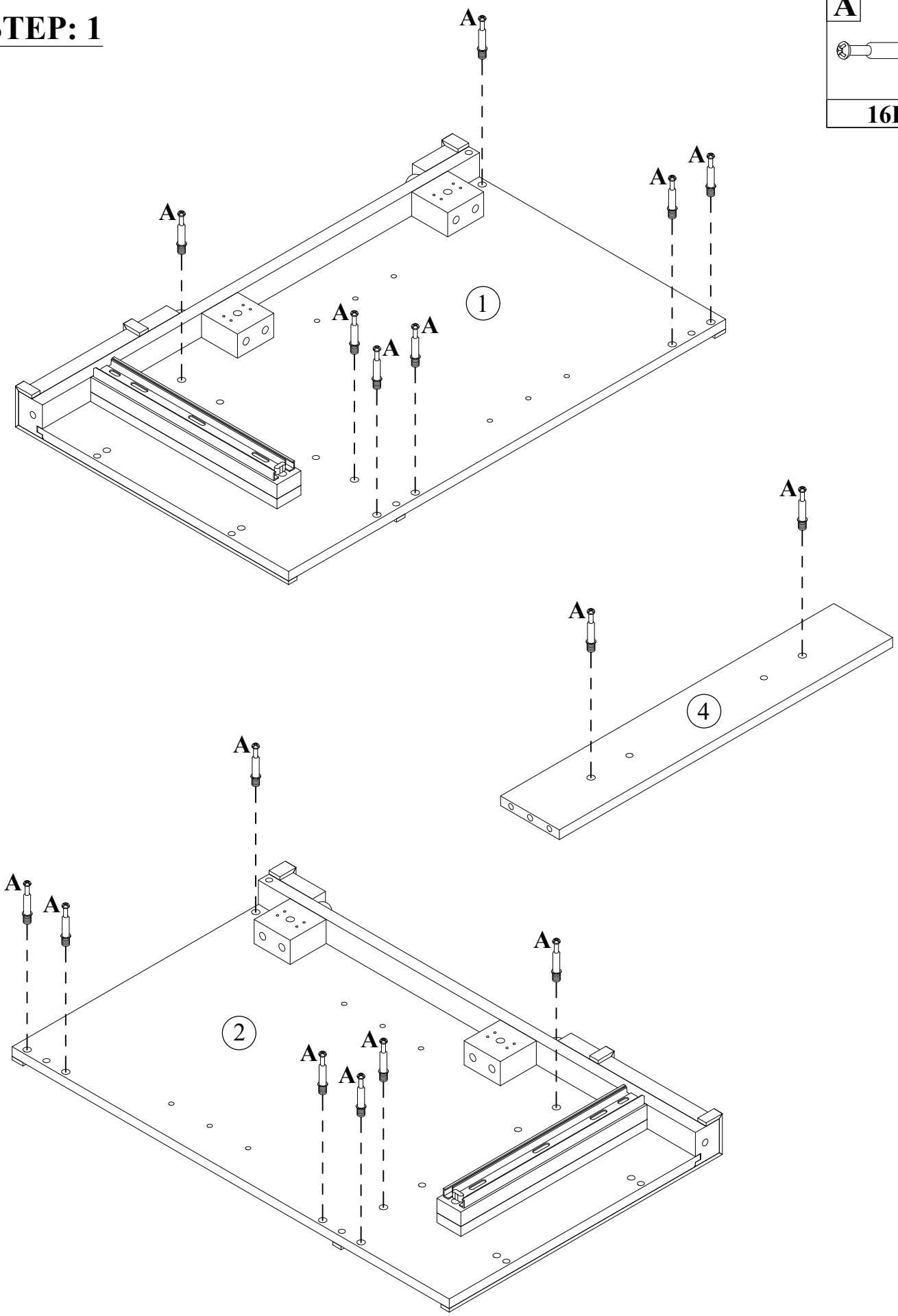

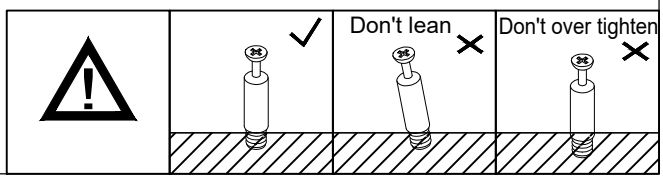

STEP: 2

B	C
	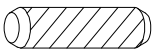
2PCS	2PCS

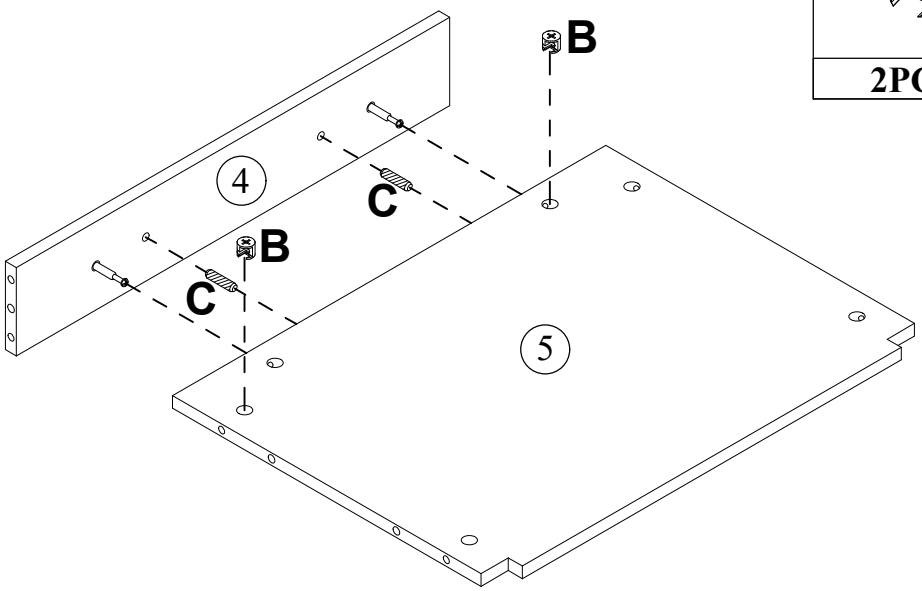

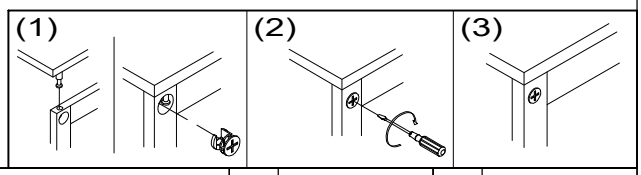

STEP: 3

B	C
	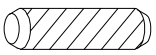
7PCS	5PCS

STEP: 4

D	E	C	O
2PCS	2PCS	2PCS	1PC

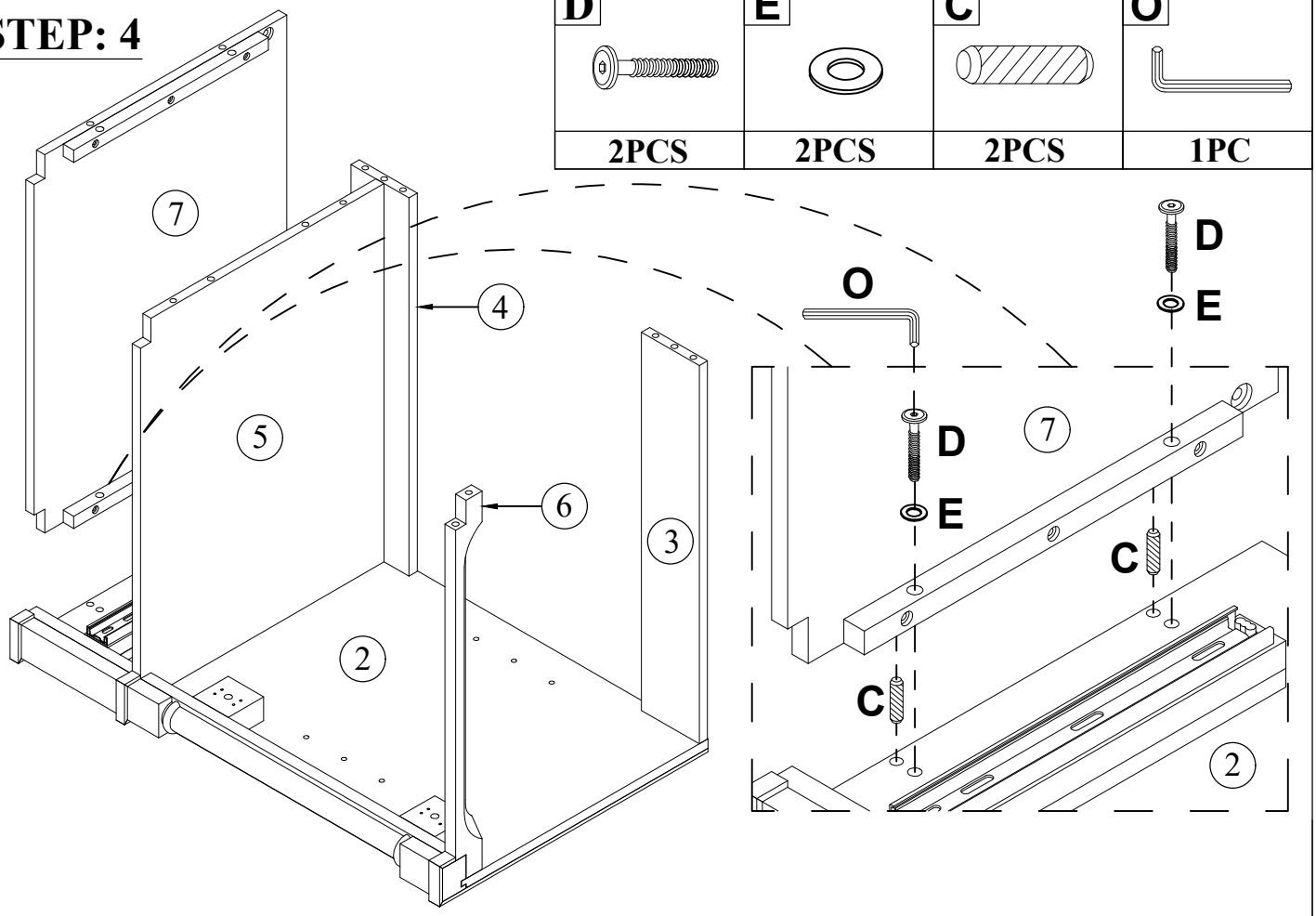

STEP: 5

O	D	E	B	C
1PC	2PCS	2PCS	7PCS	7PCS

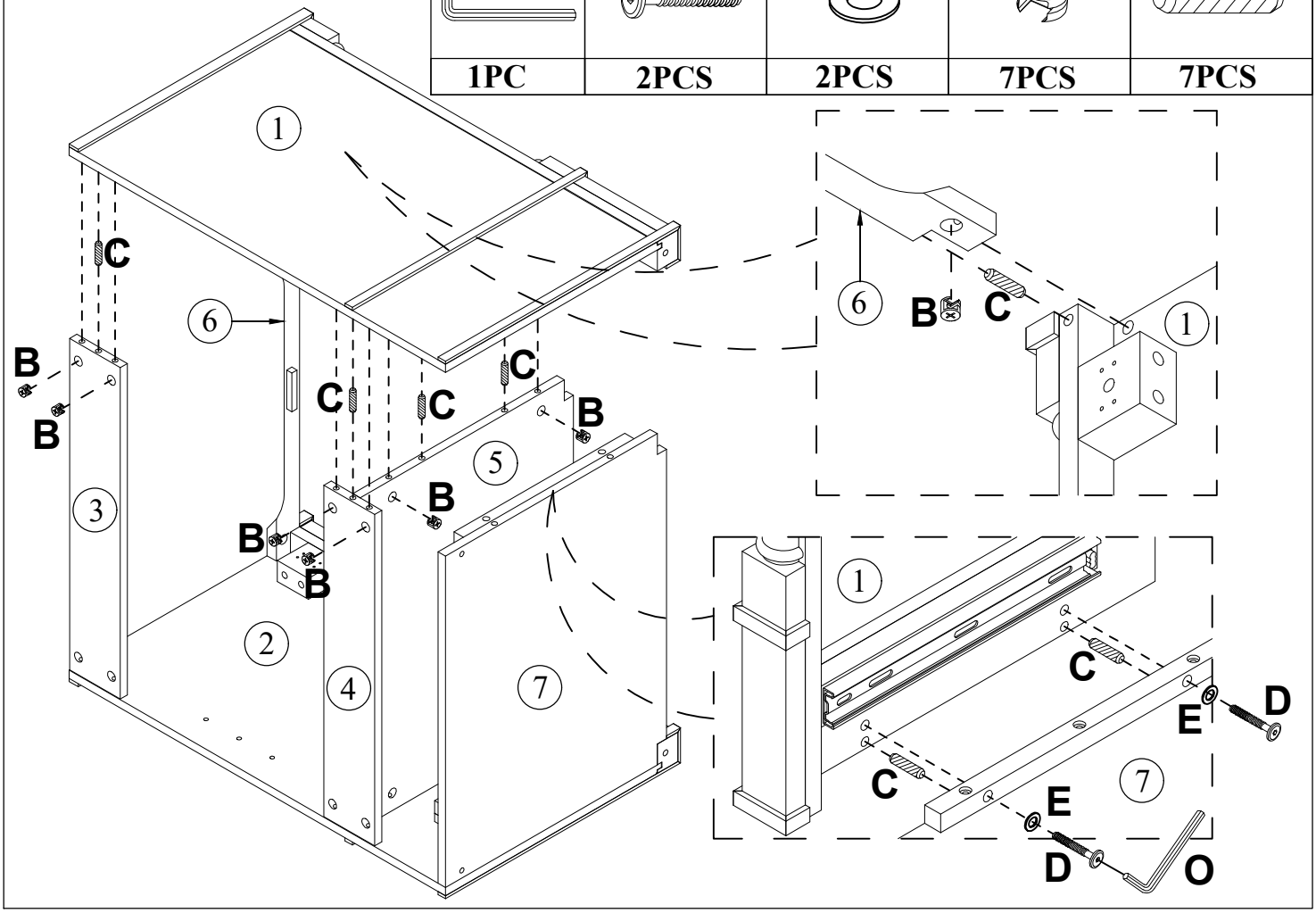

STEP: 6

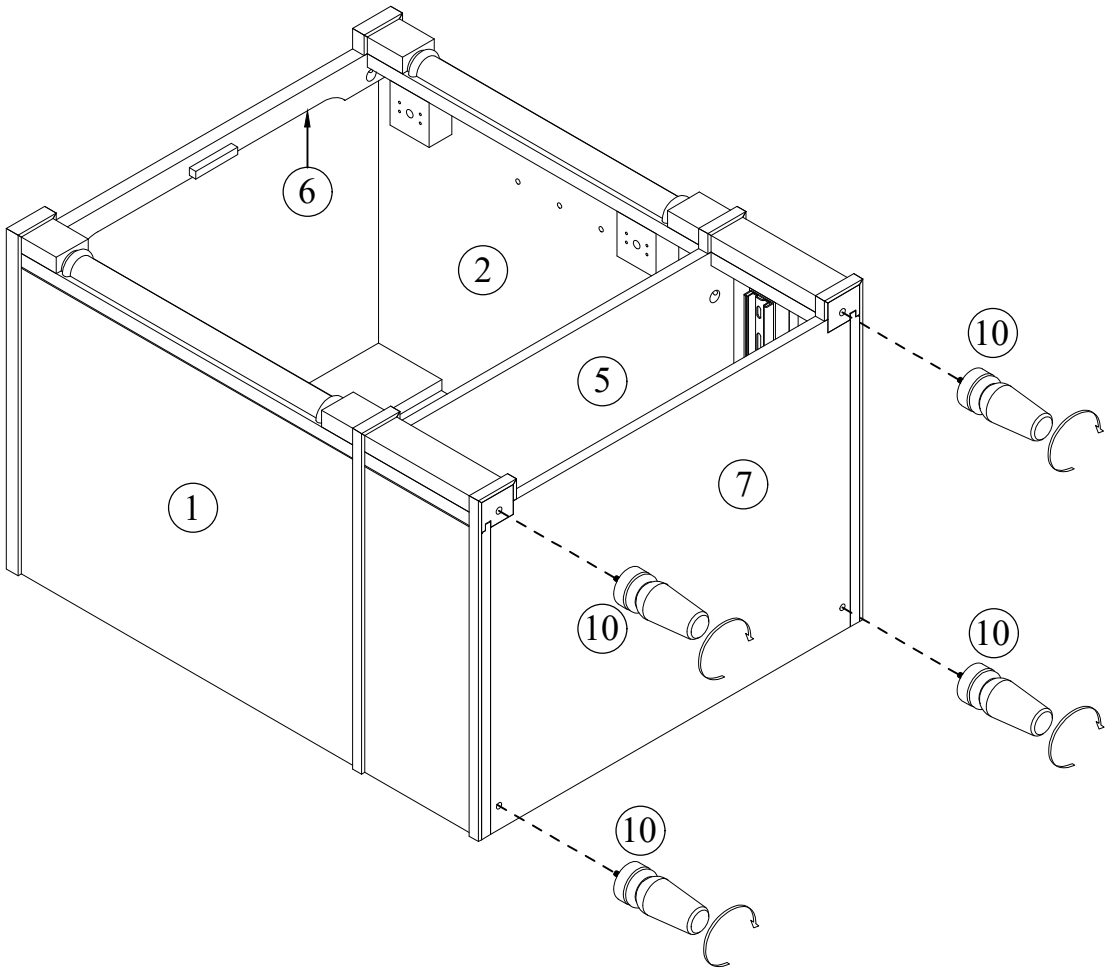

STEP: 7

F	G
4PCS	8PCS

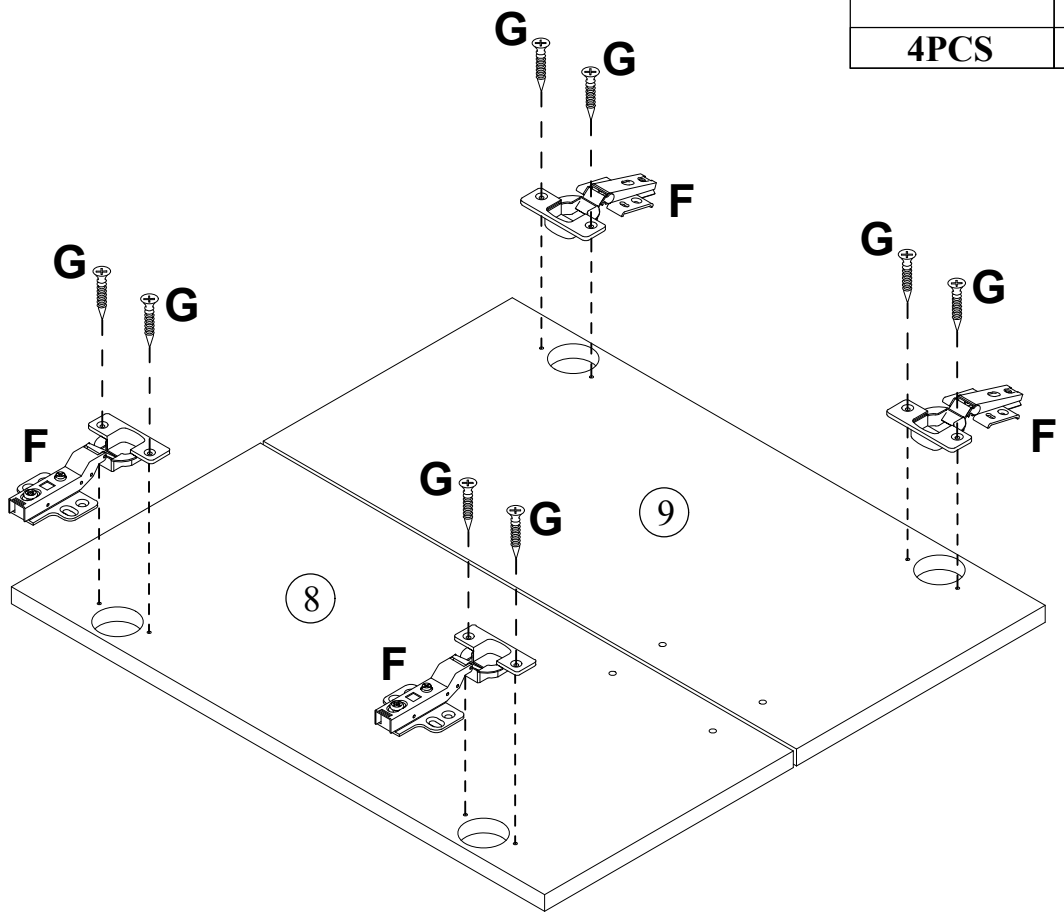

STEP: 8

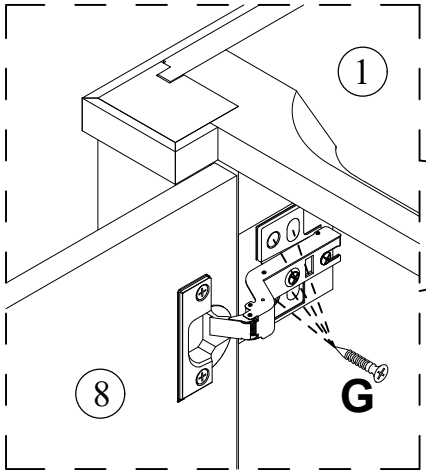

H	I	G
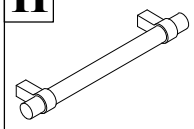	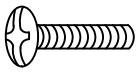	
2PCS	4PCS	16PCS

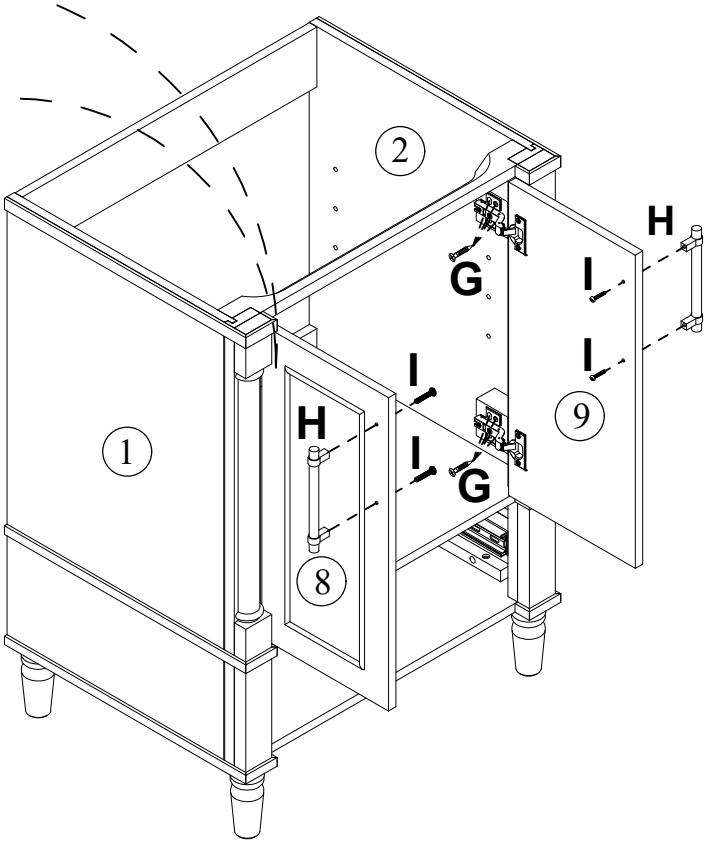

Use the screws to adjust up or down

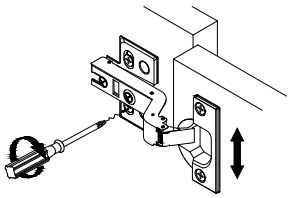

Use the screws to permanent

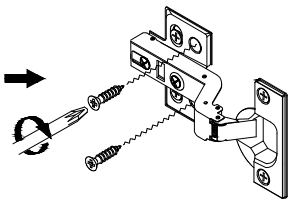

Use the screws to adjust left or right

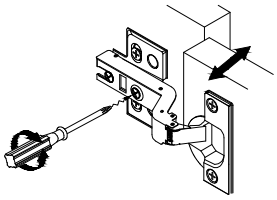

Use the screws to adjust in or out

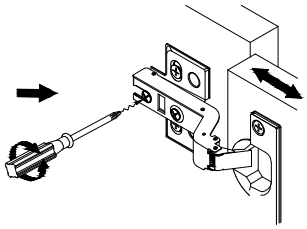

STEP: 9

J
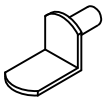
4PCS

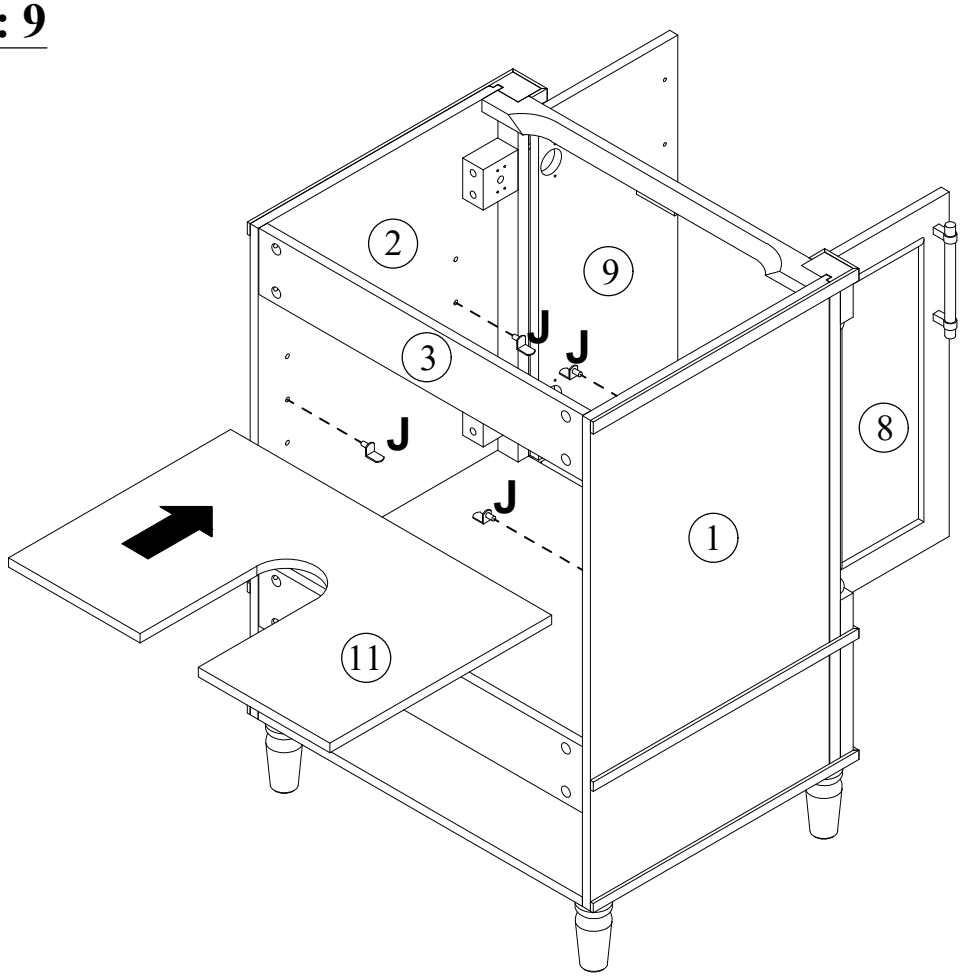

STEP: 10

H	M	L	K
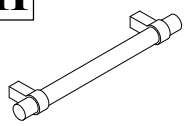	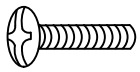		
1PC	2PCS	8PCS	4PCS

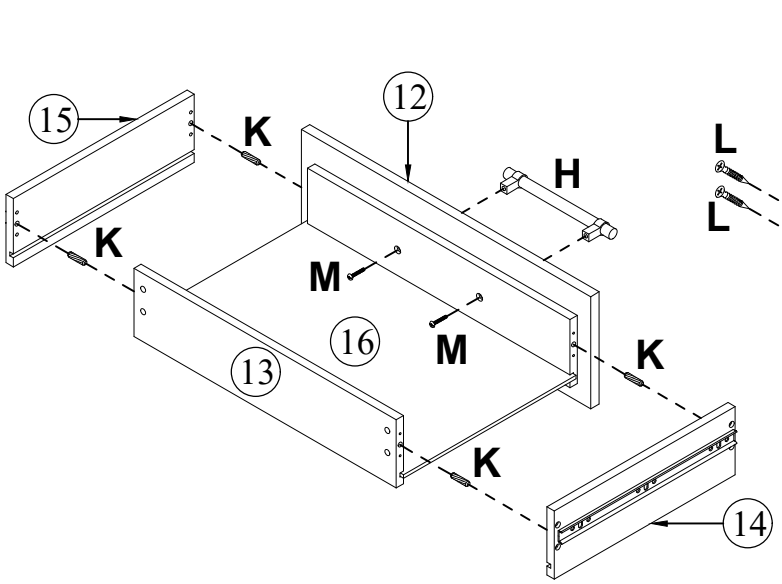

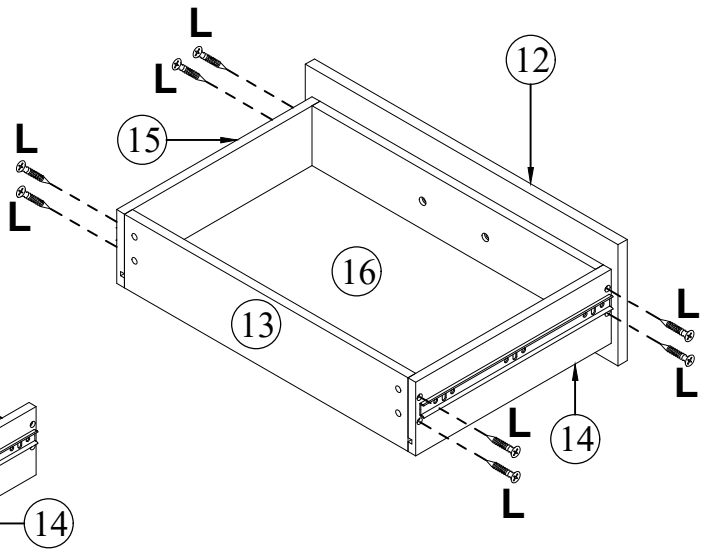

STEP: 11

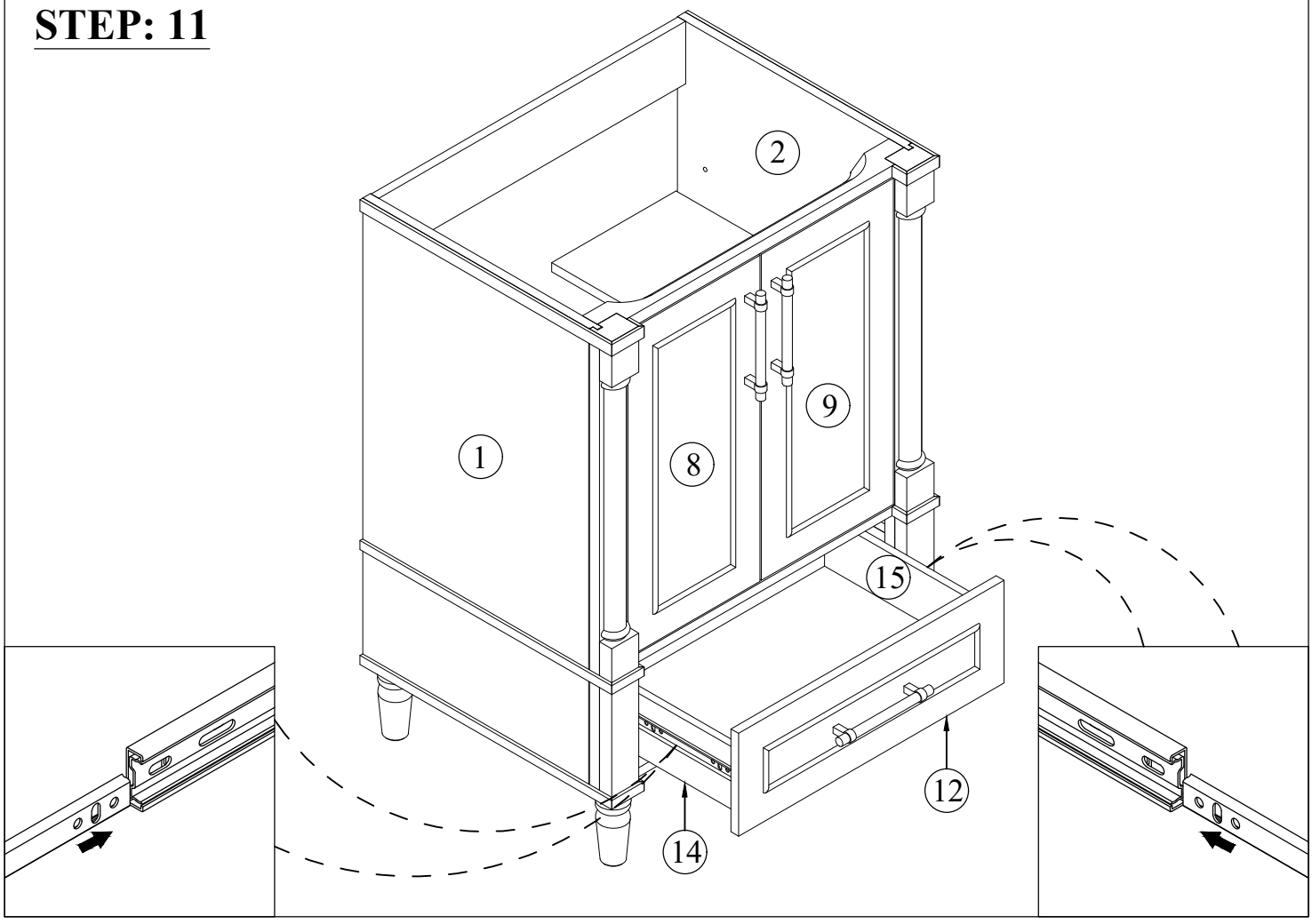

STEP: 12

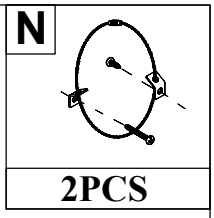

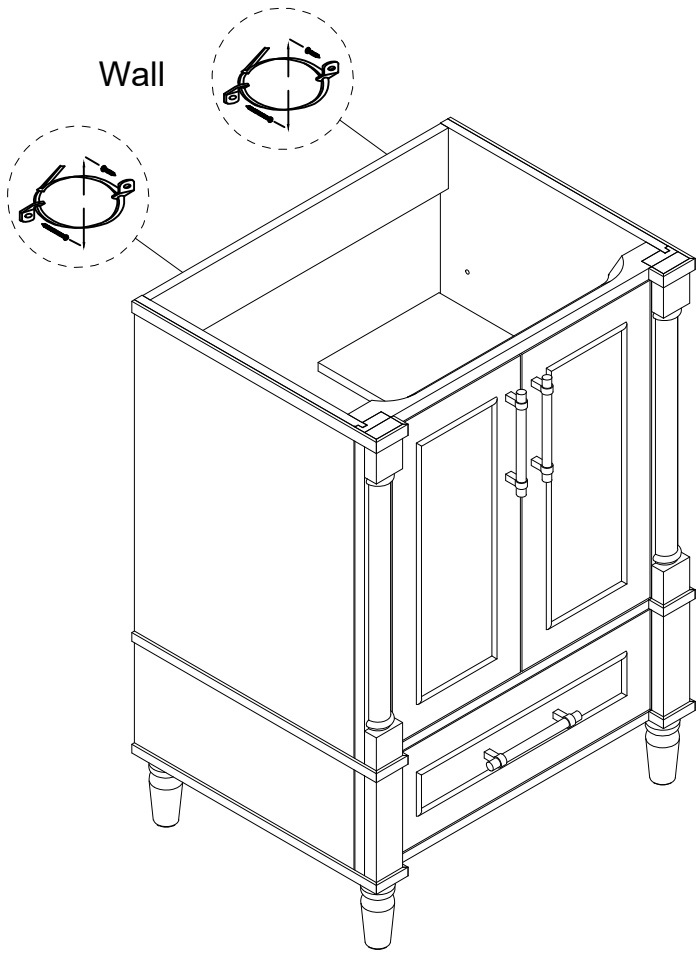

STEP: 13

Install the sink on the cabinet with glue.
Let stand for 24 hours

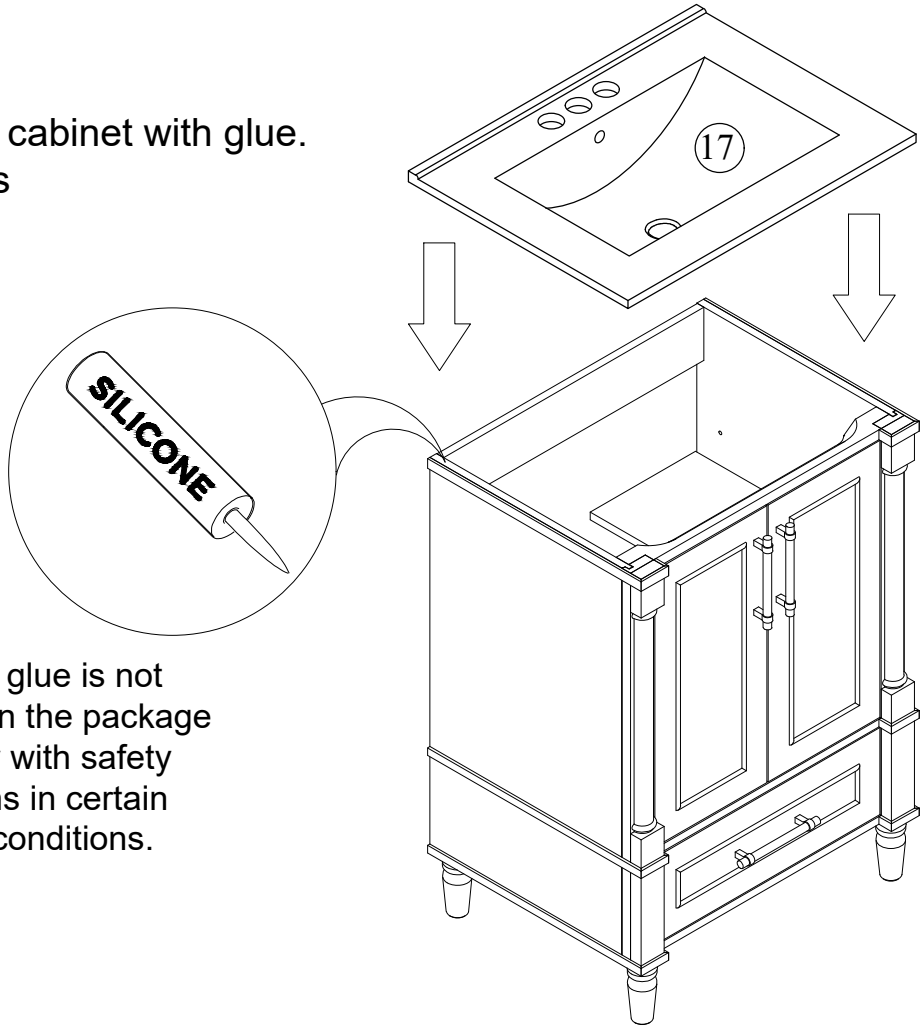

*Silicone glue is not included in the package to comply with safety regulations in certain shipping conditions.

STEP: 14



