ASSEMBLY INSTRUCTION

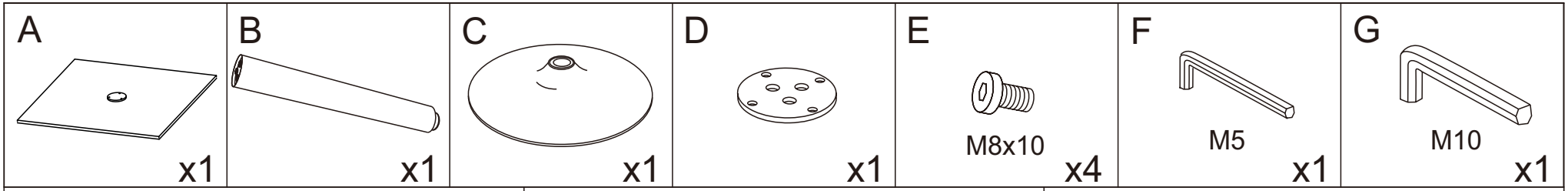

STEP 1

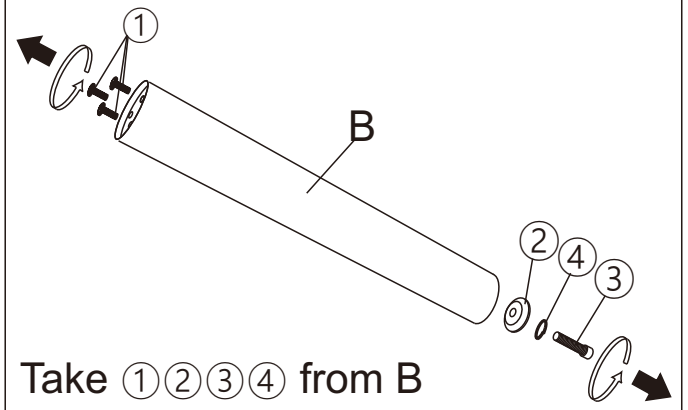

Take ①②③④ from B

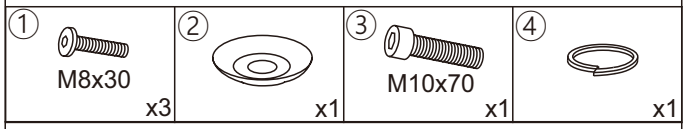

STEP 2

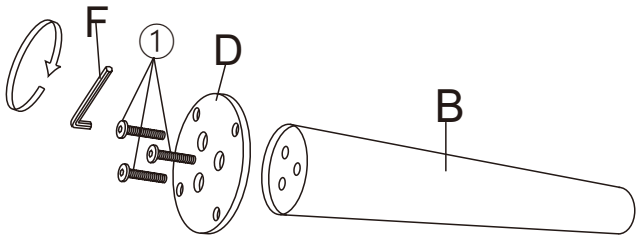

STEP 3

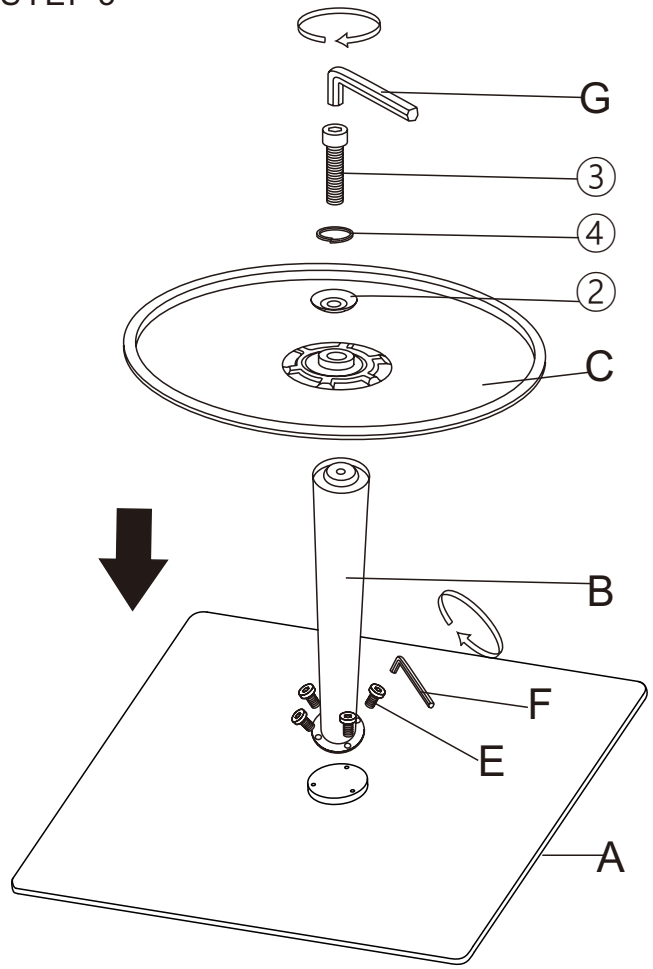
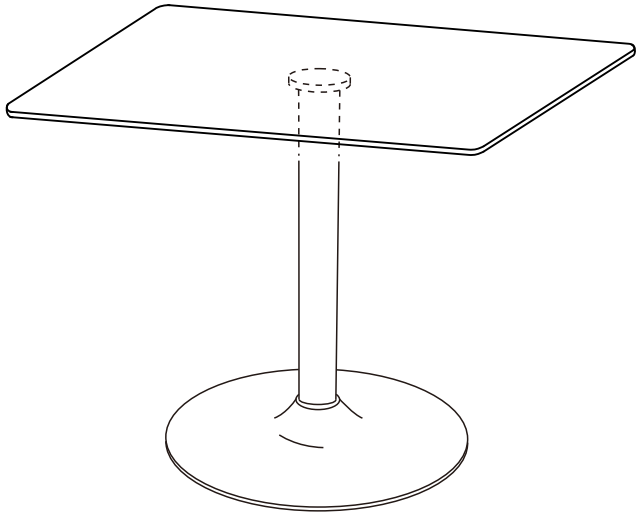
STEP 4