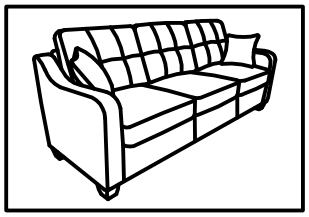

ASSEMBLY INSTRUCTIONS

Parts list:

A BACK CUSHIONS (3 PCS) 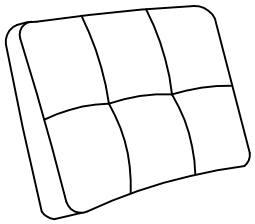	B SEAT CUSHIONS (3 PCS) 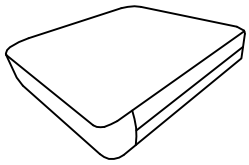	C BACK FRAME (1 PC) 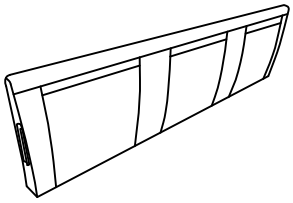
D SEAT FRAME (1 PC) 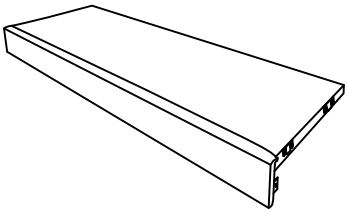	E ARM FRAME (1 PAIR) 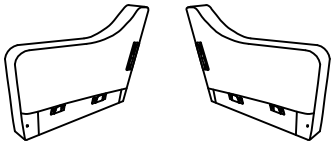	F SMALL PILLOWS (2PCS) 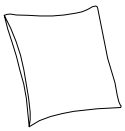
G LEGS (4 PCS) 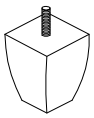	H PLASTIC GASKETS (4 PCS)	I FLAT WASHERS (5 PCS) 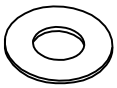
J ALLEN KEY (1 PC)	K BOLTS (3 PCS) 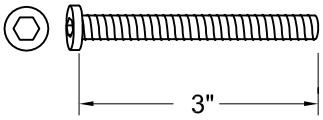	L BOLTS (2PCS) 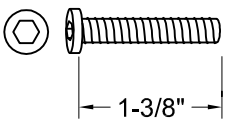
		M LOCK WASHERS (2 PCS)

How to assemble:

STEP 1:

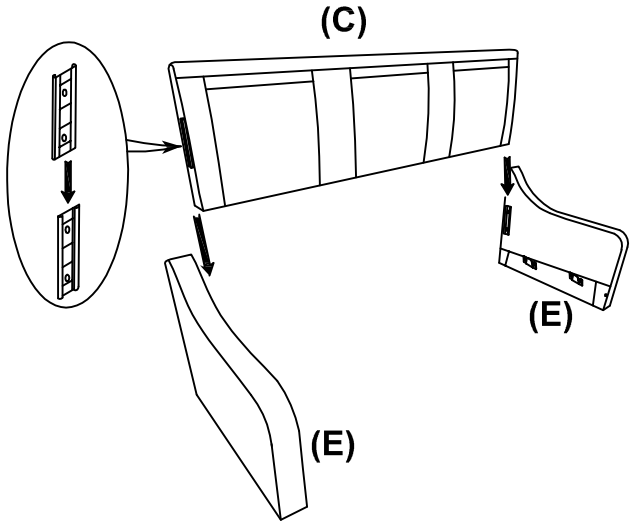

STEP 2:

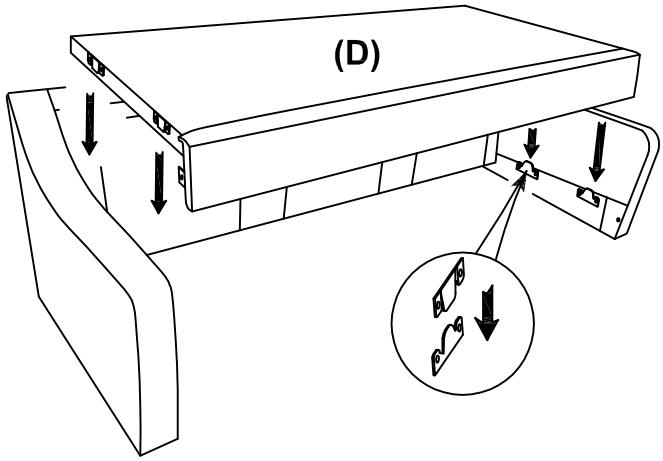

STEP 3:

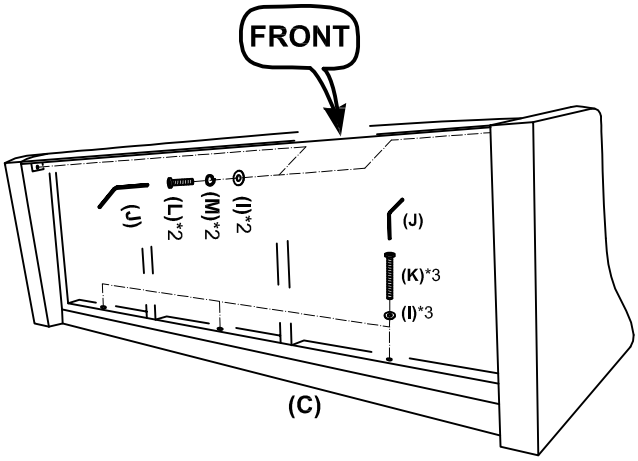

STEP 4:

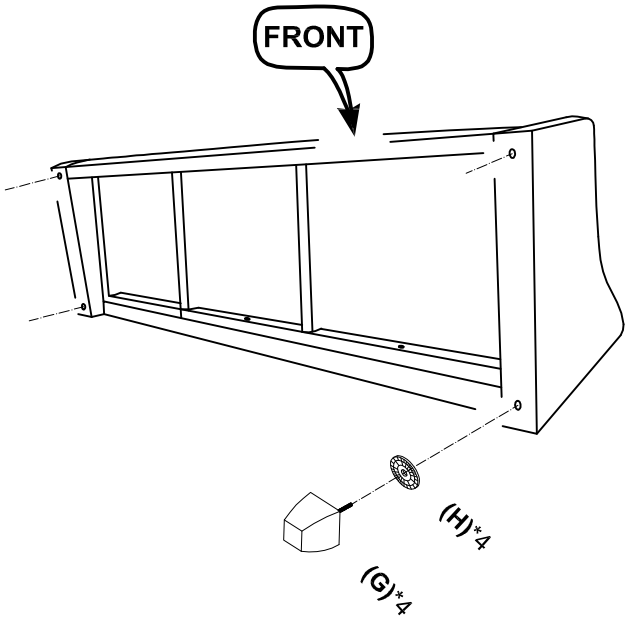
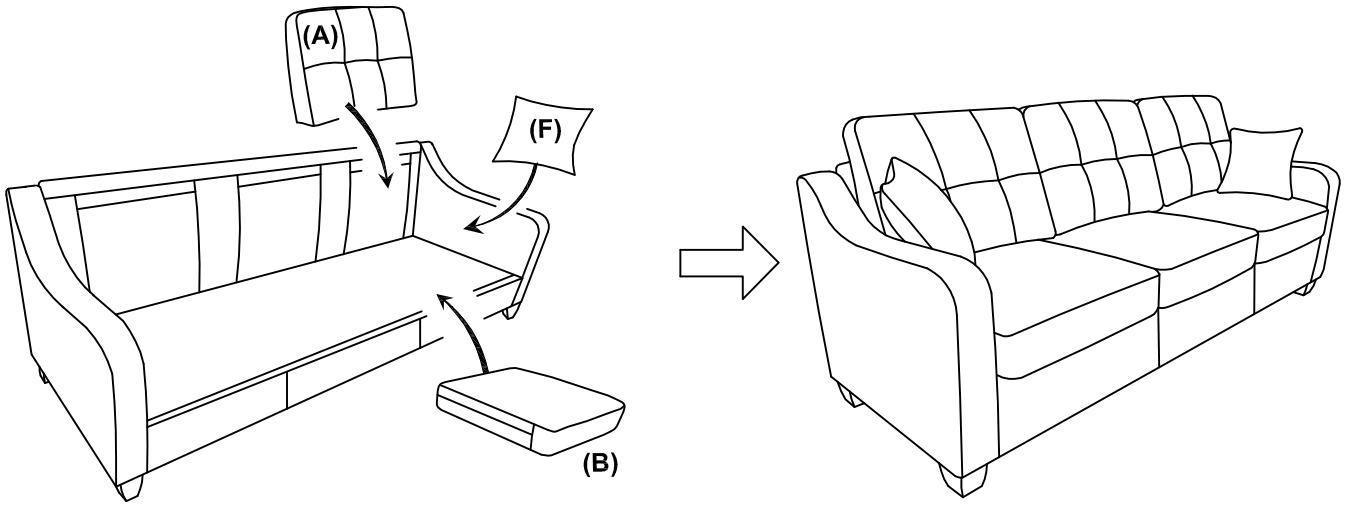
STEP 5: