MANUAL INSTRUCTION

Three Layer Storage Rack

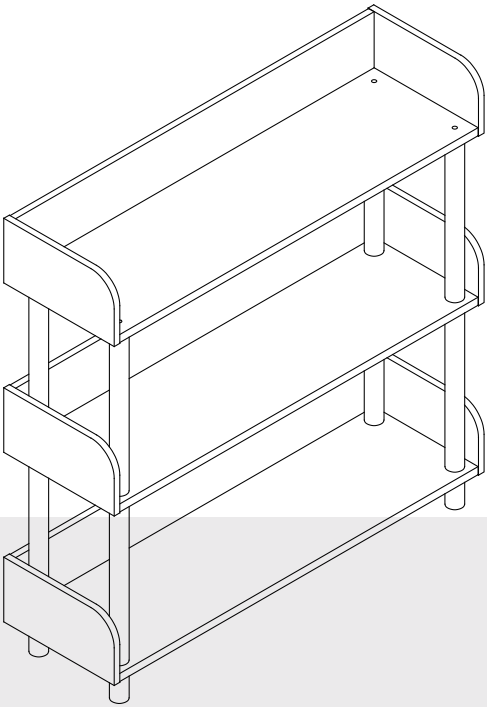

Three Layer Storage Rack

We offer a diverse range of products to meet the needs of customers.

Indoor Furniture

We are a professional furniture provider with top-notch factories and outstanding designs, Our mission is to provide consumers with new lifestyles. By collecting consumer feedback, we constantly improve our products and create more choices for consumers.

If you want to create your space,

We are an ideal choice.

Always.

All the Three Layer Storage Rack have passed strict quality inspections before deliver. Read this manual carefully to ensure properusage.

WARNING

Ensure that all parts and hardware are available before beginning assembly.

NOTICE

1. Children are not allowed to operate.
2. Do not pull the door vigorously to prevent the storage cabinet from tipping over.
3. Please attach the storage cabinet to the wall with an anti-tip device after installation is complete.
4. When using the storage cabinet for the first time, please keep it in a ventilated environment to allow the smell to fully evaporate.
5. When placing the partitions, please make sure the nails are firmly installed to prevent the partitions from falling off.
6. If any parts are missing, broken, damaged or worn, discontinue use of the product until repairs are made and/or factory replacement parts are installed.
7. Do not use this product in a manner inconsistent with the manufacturer's instructions, as this may void the product warranty.
8. If accessories are missing, please contact customer service for communication in time, we provide 7x24 hours after-sales service.
9. Do not use any attachments or accessories other than the original factory attachments and accessories.
10. Do not alter this equipment. Any alteration will create a safety hazard.

WARNING

1. Follow each step carefully to ensure the proper assembly of this product.
2. Two people are recommended for ease in the assembly of this product.
3. The three main types of hardware used to assemble this product are : wood dowels , screws and bolts.
4. A Phillips head screwdriver is required for the assembly of this product .
5. Power tools should not be used to assemble this product .

TOOLS REQUIRED

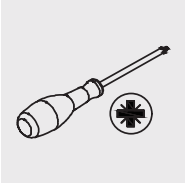

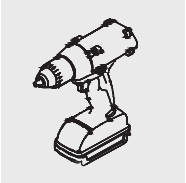

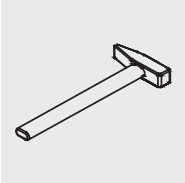

2 Persons Assembly

Up to 30 Minutes For Assembly

When installing,please carefully confirm whether each screw corresponds to the manual, accessories with similar shapes can be distinguished by size.

PARTS

①

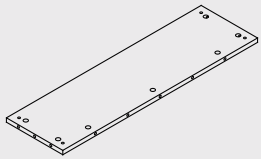

3 PCS

②

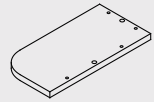

3 PCS

③

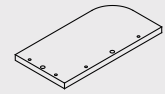

3 PCS

④

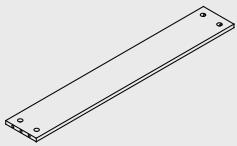

3 PCS

⑤

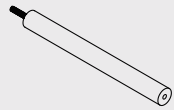

8 PCS

⑥

4 PCS

HARDWARE

A

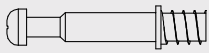

33+2 PCS

B Φ15 X 9.5mm

33+2 PCS

C Φ6 X 30mm

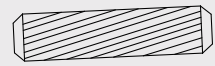

18 PCS

D Φ 8 X 40mm

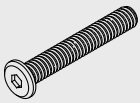

4 PCS

E M4

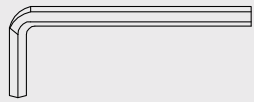

1 PCS

F

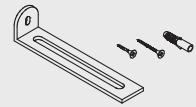

1 PCS

G

1 PCS

H

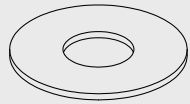

8+2 PCS

I

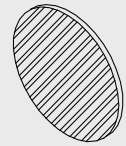

33+2 PCS

PRODUCT ASSEMBLY

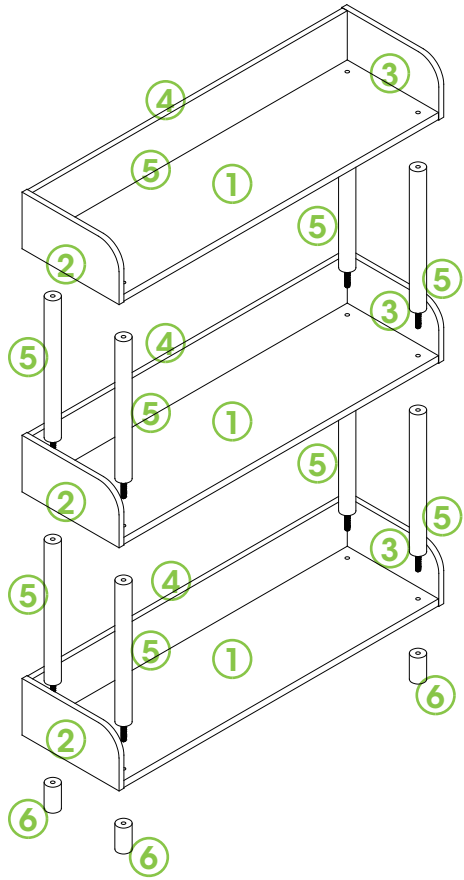

PRODUCT ASSEMBLY

1

PART	NO.	QTY.
	A	33
	C	18
	G	1

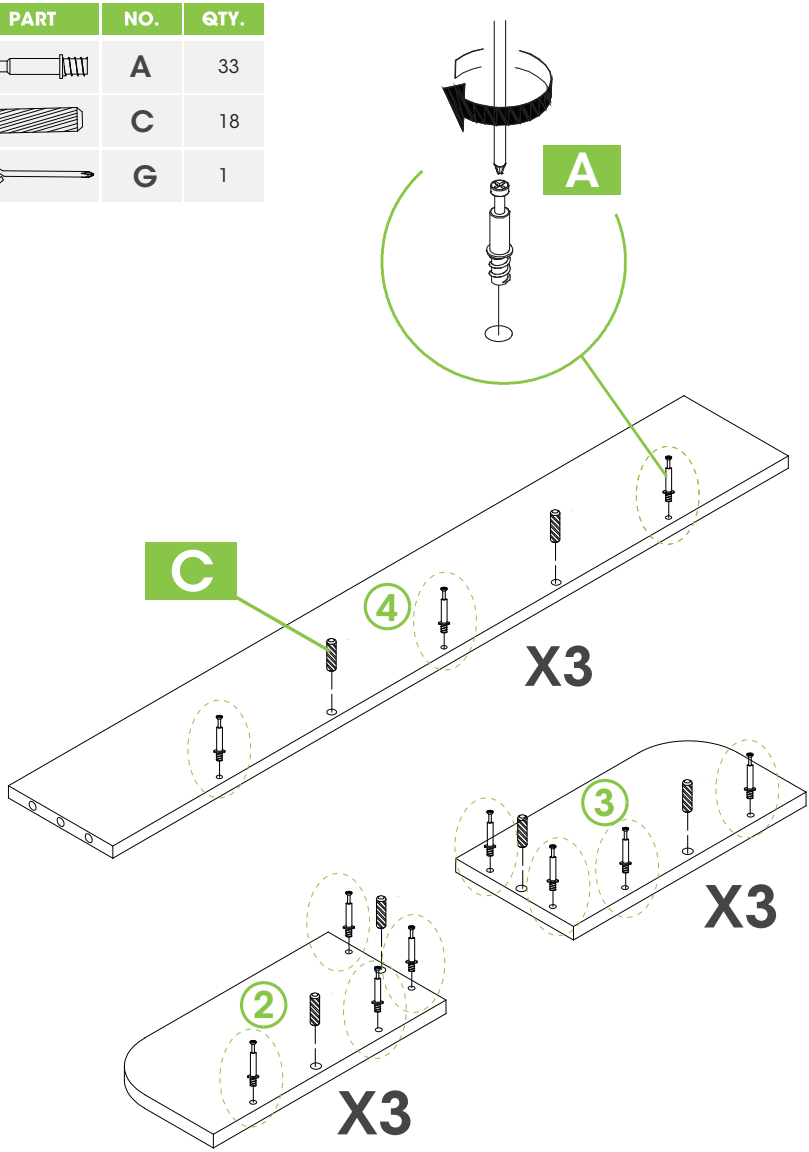

PRODUCT ASSEMBLY

2

PART	NO.	QTY.
	B	9
	G	1

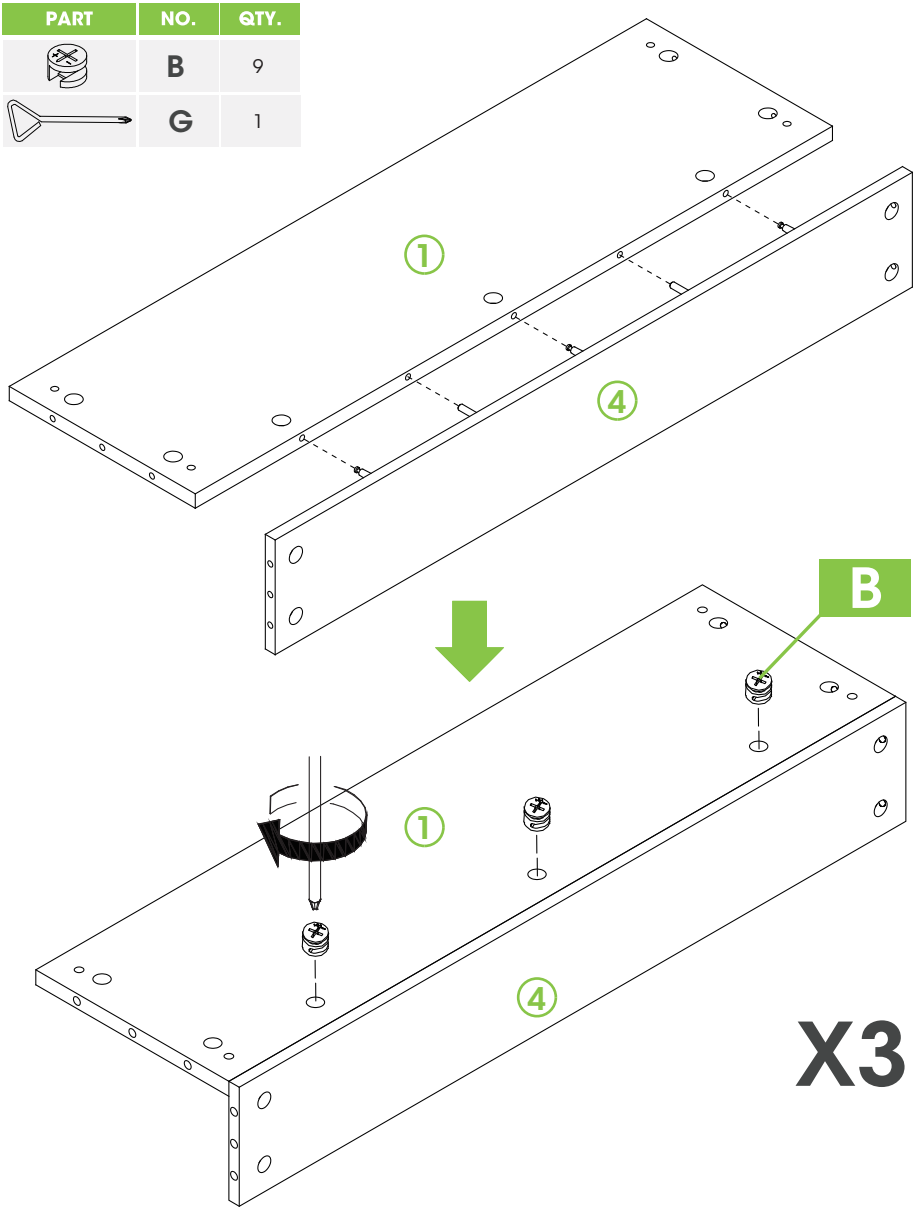

PRODUCT ASSEMBLY

3

PART	NO.	QTY.
	B	24
	G	1
	I	33

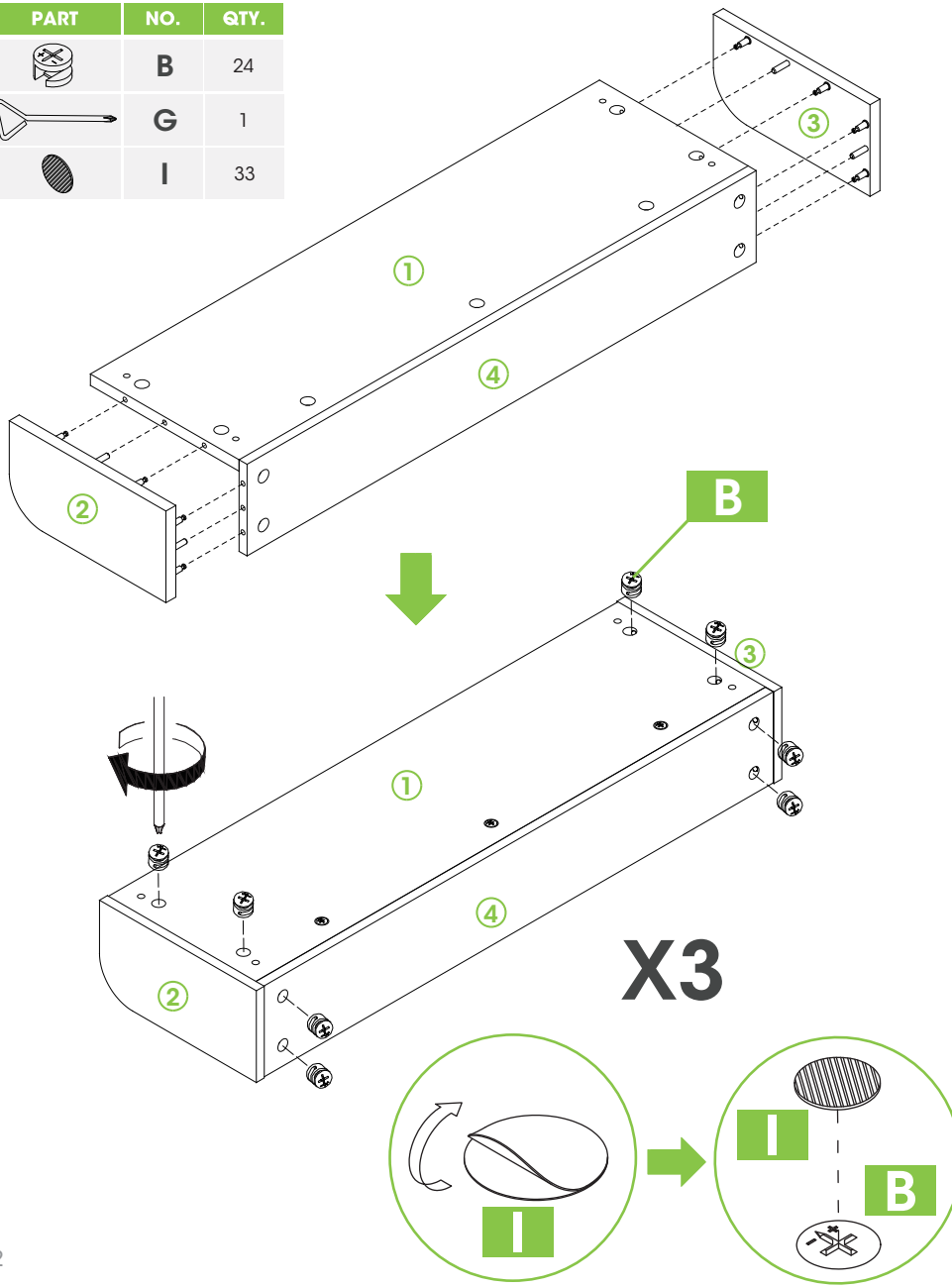

PRODUCT ASSEMBLY

4

PART	NO.	QTY.
	H	8

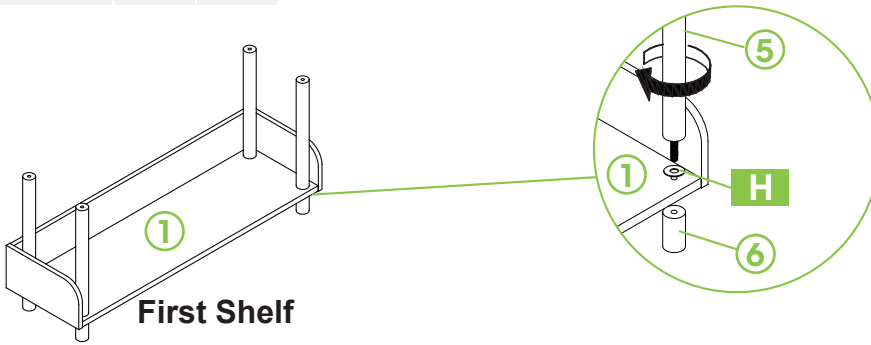

First Shelf

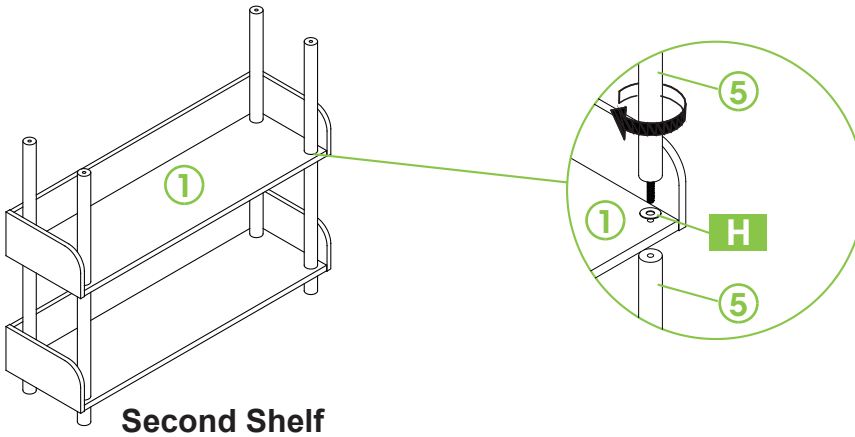

Second Shelf

PRODUCT ASSEMBLY

5

PART	NO.	QTY.
	D	4
	E	1

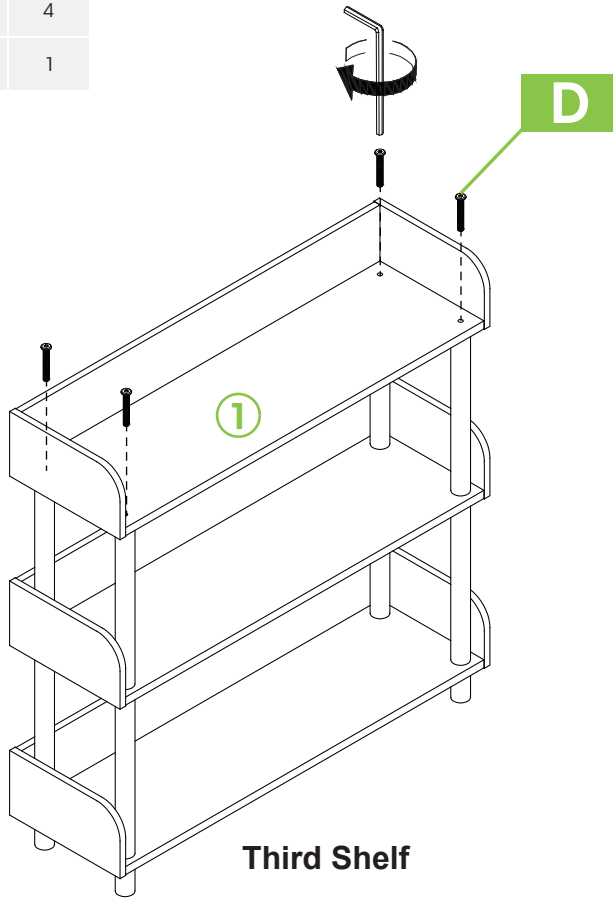

PRODUCT ASSEMBLY

6

PART	NO.	QTY.
	F	1

We have included a set of tipping restraint hardware for this unit. You must install this hardware to prevent accidents or injuries that can result from the unit falling

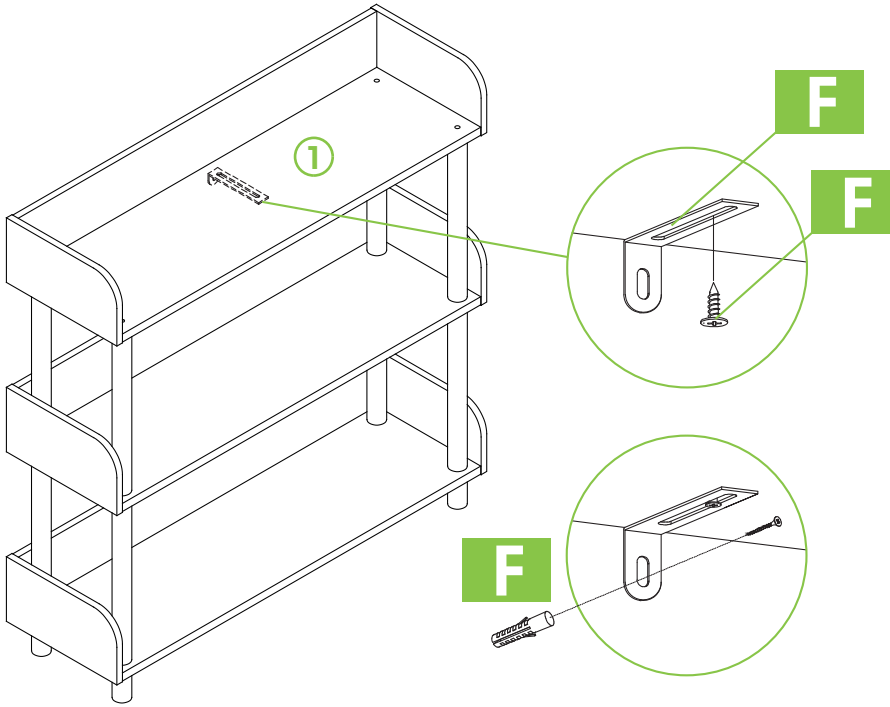

HELP CENTER

Question about your product? We're here to help. Visit us at:

Chat Support

Product Inquiry

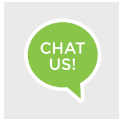

Orders FAQ

Product Assembly

Returns & Refunds

We Stands Behind the Quality of Their Furniture

If you have any issues with your item please let us know! We will always do our best to come up with a solution that you will be happy with.
Please get in touch with our customer service team before returning the product.
And pls do not throw the original box(es) if you have not finished assembling or confirmed no quality issues.
Length of return period:

Items can be returned within 30 days of purchase.
In the meanwhile, everything you purchased from us comes with a one-year warranty.

Who is responsible for the return shipping fee:

We will cover the return shipping fees if:

1. Your item has a manufacturing defect in its materials or workmanship. For example, torn wicker or misaligned screw holes. We will send you a prepaid shipping label after photos are sent.
2. Your item has been damaged in transit. For example, glass is broken or wicker is damaged. We will send you a prepaid shipping label after photos are sent.
3. You receive the wrong box(es) due to a warehouse error. We will send you a prepaid shipping label after photos are sent of the wrong SKU numbers on the outer box(es).
4. One or more boxes are lost in transit. We will send you a prepaid hipping label if you no longer want the item.

* However, we still hope to work with you for a better solution instead of a return. Please don't hesitate to contact our customer service team.

Customer will cover the return shipping fees if:

1. You don't like the product(s) after receiving the box(es).
2. You no longer need the product(s) but you have received the box(es).
3. You buy the product(s) by mistake but you have received the box(es).
4. Order/Shipment cancellation failed and you have received the box(es).

Return Request

In order to get a full refund as described in this return policy, all items must be: (1) In a brand new/unused condition, please provide photos before and after packaging. (2) When returning, all accessories and parts are firmly packed in all original packaging.
If your return does not meet the requirements, you may not get a full refund.

When will I be refunded?

The refund is released once the goods have been returned to our warehouse.

What if the product is damaged/defective outside of the valid return period?

We want you to be a happy customer. Please reach out to us by email and we will come up with a solution to make sure you are satisfied.