TWW3720MB,C,SN
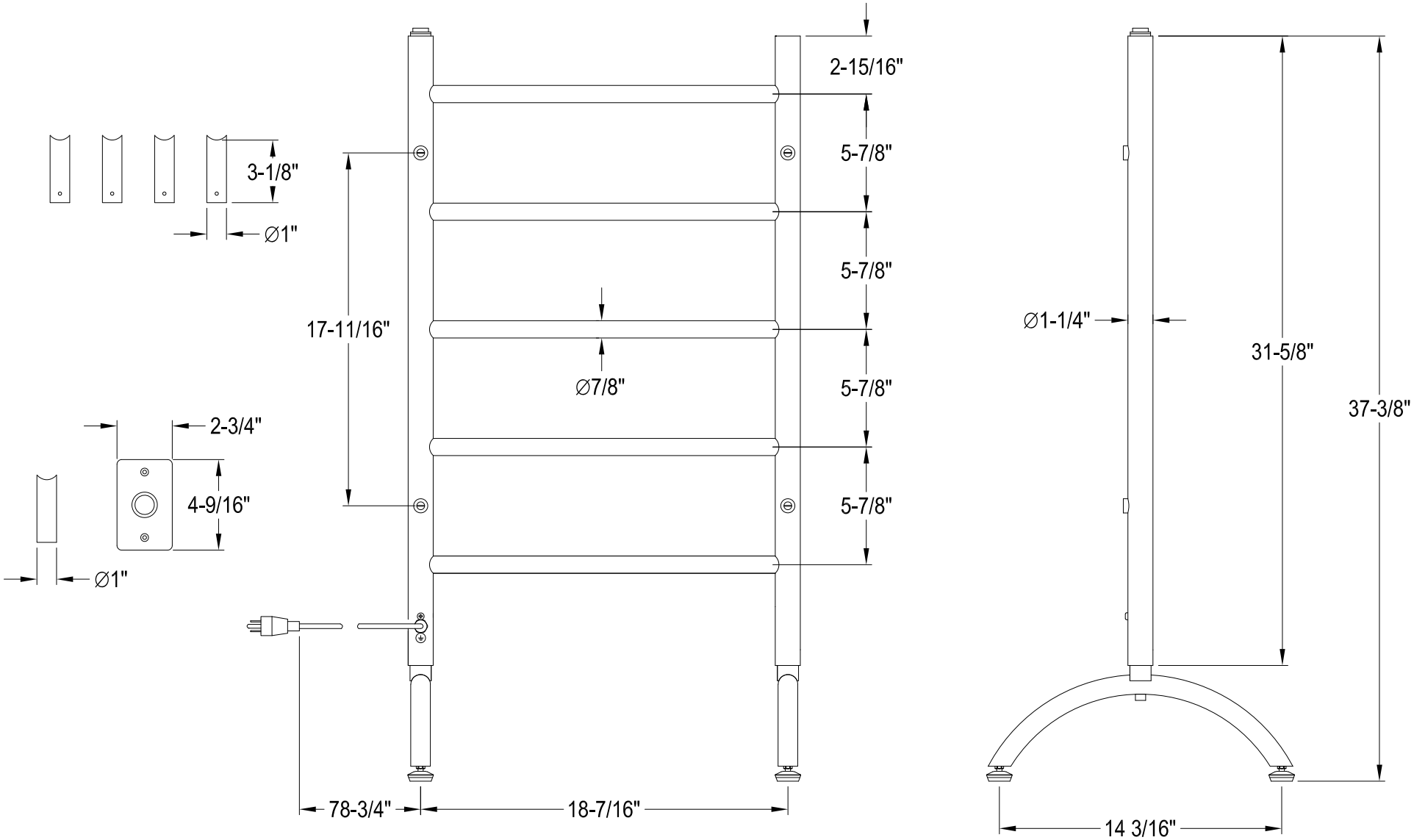
Freestanding, Wall Mount & Hardwire Electric Towel Warmer