KD1UD33B

33 Inch Undermount Double Bowl
Stainless Steel Kitchen Sink with Drain Assure

Kräus®
SPECIFICATION SHEET

Sink Dimensions
Overall Dimensions: 32 7/8" x 18 3/4"
Bowl Dimensions: 15 1/8" x 17"
Sink Depth: 9"

Features
- 16 Gauge Stainless Steel Construction
- Double Bowl 50/50 Undermount Sink
- Required Minimum Cabinet Size: 36" Left to Right, 24" Front to Back
- Rear Center-Set Drains
- 3 1/2" Drain Openings
- NoiseDefend Undercoating and Sound Dampening Pads

Accessories Included
- Strainer ST-4 x2
- Cover Cap STC-1 x2
- Silicone Mitt KSM-1BLACK
- Silicone Trivet KST-1BLACK
- Cut-Out Template
- Mounting Hardware

CODES/STANDARDS:
Product Certification
cUPC (ASME A112.19.3/CSA B45.4), MASS

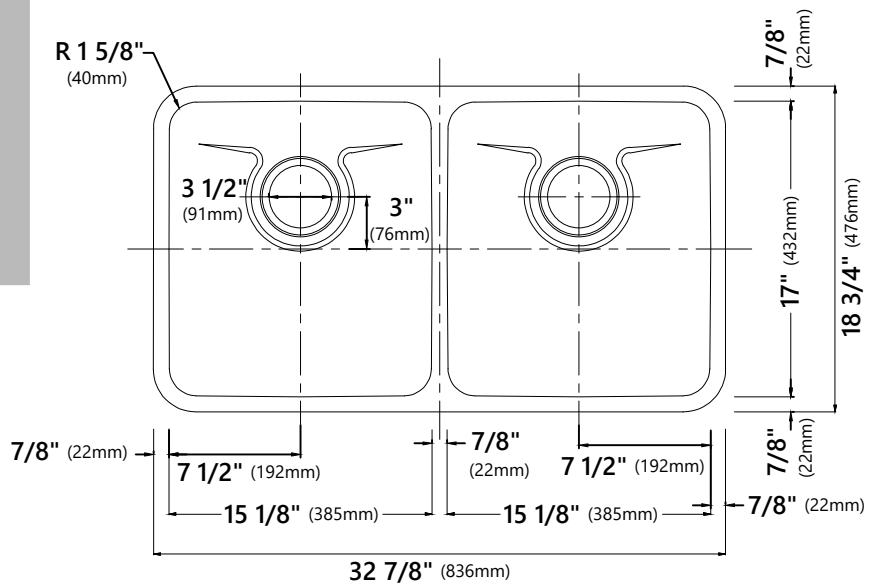

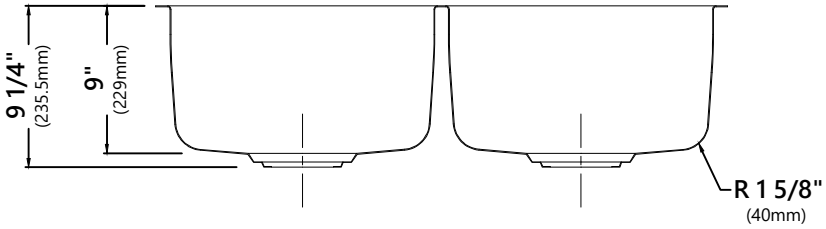

Warranty
Kraus Limited Lifetime Warranty
see website for details **www.kraususa.com**

Kraus USA Customer Service
1.800.775.0703 | customerservice@kraususa.com

REV. August 30, 2021