Trellis

Assembly Instruction Manual

Please read instructions thoroughly before beginning assembly.

Check boxes carefully for contents listed. Some parts are packaged inside of others.

Assemble on a clean, flat, non-abrasive surface to prevent scratching.

In the event of missing or damaged parts please call or email our customer service department at the contact info below.

Tools Required

-Battery or Electric Drill (#2 phillips bit)
-Tape Measure
-PVC, Super or Crazy Glue

Part #	Description	Dimension	Box #	Qty
1	Left Post	2" sq. x 84"	1	2
2	Right Post	2" sq. x 84"	1	2
3	Horizontal Rail	7/8" x 1 ½" x 14"	1	1
4	Horizontal Rail	7/8" x 1 ½" x 18 ¼"	1	1
5	Horizontal Rail	7/8" x 1 ½" x 22"	1	1
6	Horizontal Rail	7/8" x 1 ½" x 25 ¾"	1	1
7	Horizontal Rail	7/8" x 1 ½" x 29 ¼"	1	1
8	Horizontal Rail	7/8" x 1 ½" x 33 ¼"	1	1
9	Horizontal Rail	7/8" x 1 ½" x 37"	1	1
10	Horizontal Rail	7/8" x 1 ½" x 40 ½"	1	1
11	Horizontal Rail	7/8" x 1 ½" x 44 ½"	1	1
12	Horizontal Rail	7/8" x 1 ½" x 48"	1	1
13	Horizontal Rail	7/8" x 1 ½" x 52"	1	1
14	Horizontal Rail	7/8" x 1 ½" x 56"	1	2
15	Vertical Rail	1" x 1" x 84"	1	2
16	Vertical Rail	1" x 1" x 74"	1	2
17	Vertical Rail	1" x 1" x 45 ½"	1	2
18	Vertical Rail	1" x 1" x 17 ½"	1	2
19	Hardware Bag (Includes):		1	1
	▪ Spacer Tube	¾" x 2 ½"		4
	▪ Post Cap	2" square		2
	▪ Arrowhead Cap	1" x 1"		7
	▪ Painted Screw	¾"		6
	▪ Screw	#10 - 6"		4
	▪ Screw Cap	#10		4
	▪ Screw Backer	#10		4

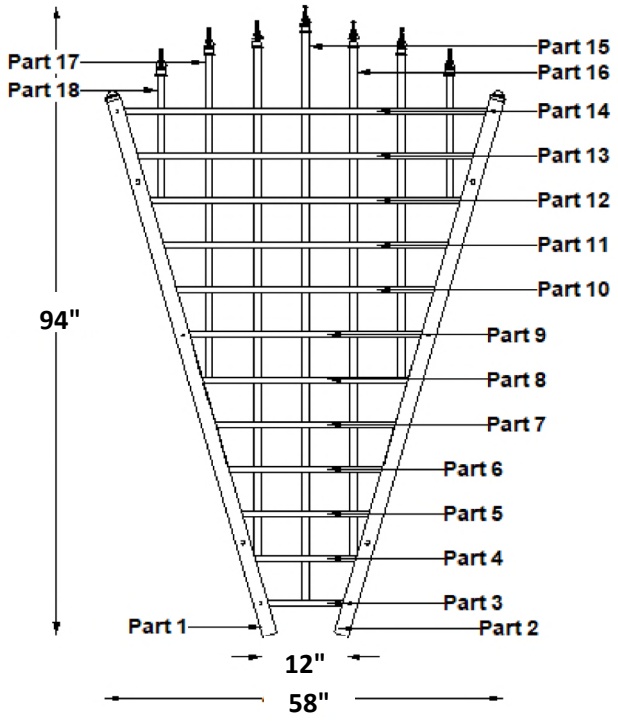

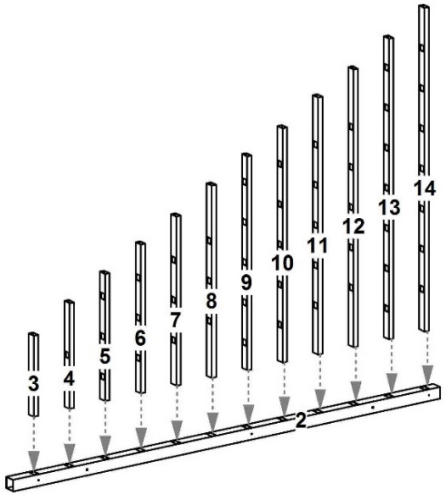

1

Lay out one right post (part 2). Starting at bottom (end with hole 6” from post end), insert horizontal cross rails from shortest to longest (part 3-14) Part number 3,4,8 & 12 have a stop to each part and they should face down toward the narrow side.

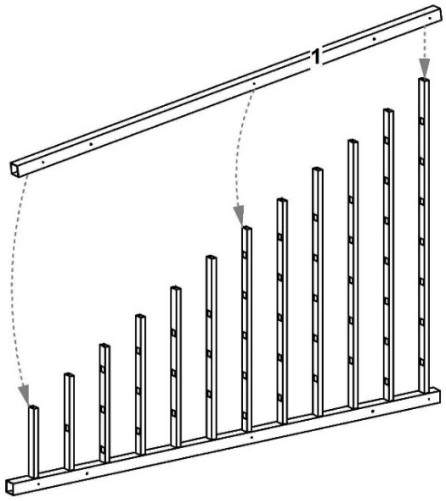

2

Slide left post (part 1) over corresponding support and cross rails.

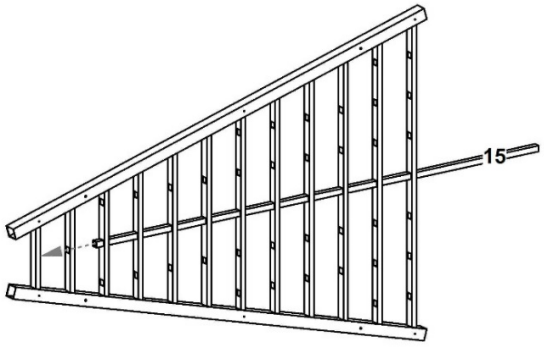

3

Starting with center hole, insert 84” vertical rail (part 15) through cross rails.

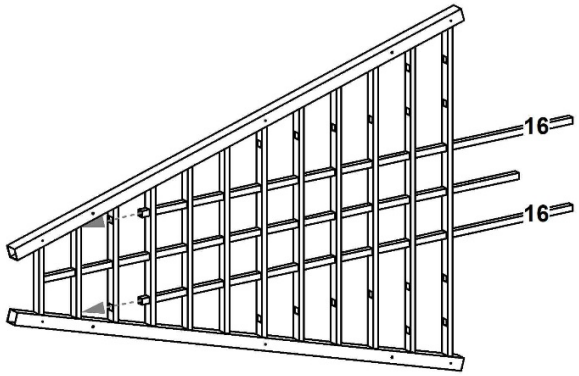

4 Insert one 74” vertical rail (part 16) through cross rails on either side of the center rail (part 15).

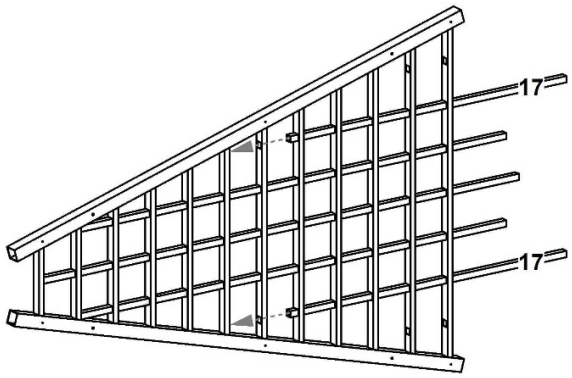

5 Insert 45½” vertical rails (part 17) through cross rails on either side of part 16.

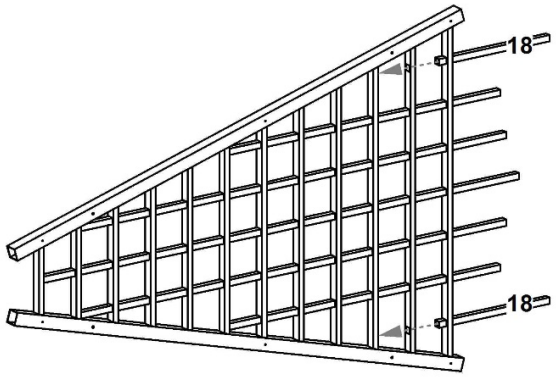

6 Insert 17½” vertical rails (part 18) through cross rails on either side of part 17.

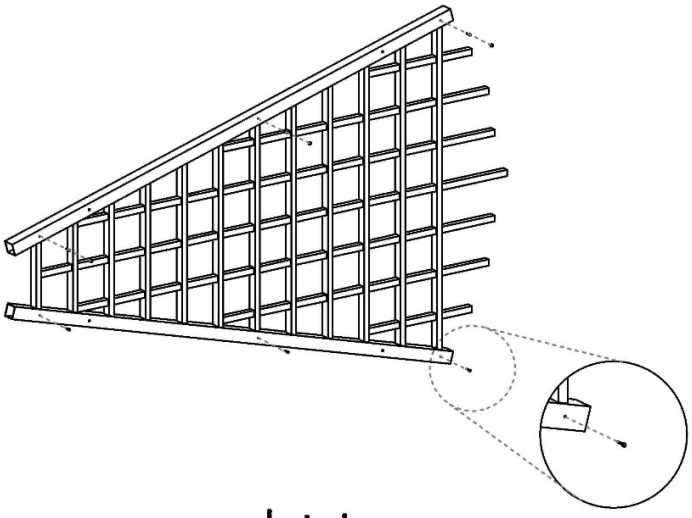

7

Using ¾" painted screws, screw together trellis. Be sure that all parts are fully inserted into posts before securing.

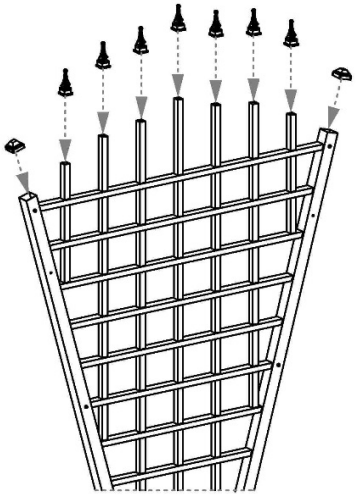

8

Using PVC, super or crazy glue, glue post caps onto posts and arrowhead caps onto vertical rails.

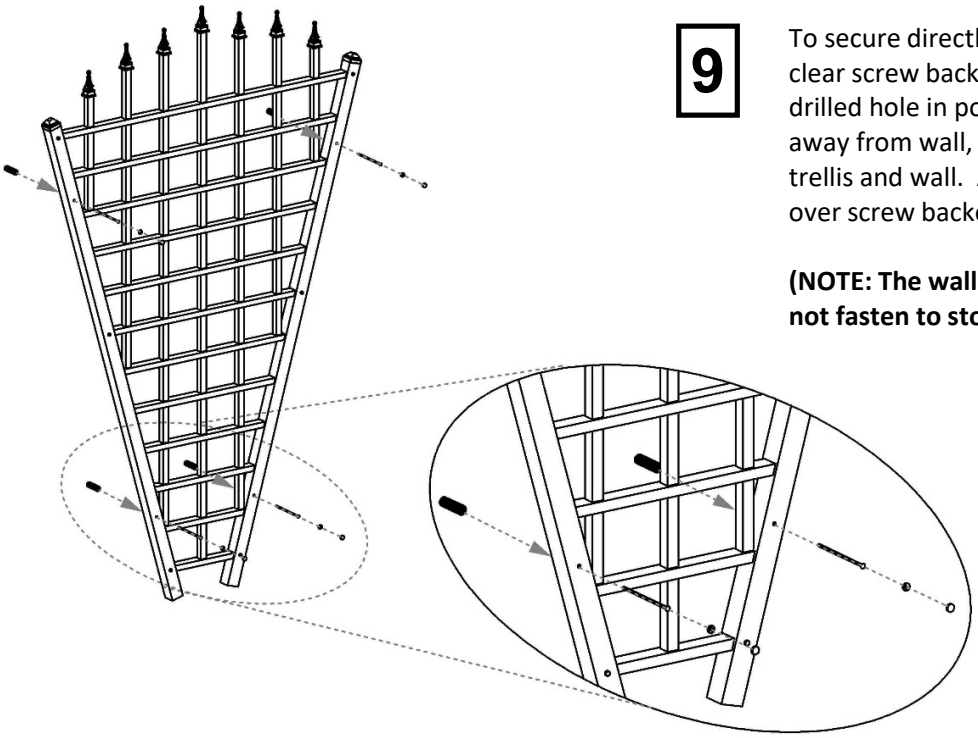

9

To secure directly to wall, slide 6” screw through clear screw backer. Insert screw through pre-drilled hole in post and into wall. To set trellis away from wall, place the spacer tube between trellis and wall. After securing, snap screw cap over screw backer.

(NOTE: The wall mounting screws included will not fasten to stone, brick or concrete walls.)

Warranty Statement

20 Year Guarantee

Please call manufacturer direct with questions concerning missing or defective parts.

Our products are warranted to be free from manufacturing defects resulting in delaminating, peeling, flaking, corroding, cracking, crazing, or extreme amounts of fading or bleaching causing the PVC to change to its natural color for a period of 20 years from the date of purchase.

Normal weathering is defined as exposure to sunlight and extremes of weather and atmosphere which will cause any colored surface to gradually fade.

CONDITIONS NOT COVERED BY THIS WARRANTY:

A. Physical abuse, misuse, neglect, or improper storage.
B. Improper installation or installation not in strict adherence to the instructions written by us.
C. This warranty does not apply if materials are painted, varnished, or coated with any substance.
D. We are not responsible for damages to product during shipping.
E. Damage attributable to atmospheric pollutants, hail, lightning, hurricane, tornado, wind borne objects, earthquake, fire, mildew, casualty, act of God, building or ground settlement, or subjection to stress or weight.

CLAIMS AND REMEDIES:
If our product is determined to have a manufacturing defect which is covered by this warranty, we will replace the material containing the defect (labor not included) F.O.B from the point of manufacture. We will not be responsible for any cost incurred in the removal or reinstallation of the product.
Important: All claims must be sent to us and should describe the defect claim.

We reserve the right to discontinue or change its design and/or color. If the original color or style is not available, we shall have the right to substitute a product designated by us.
We shall not be liable for any incidental, special, or consequential damages arising out of the use of these products.