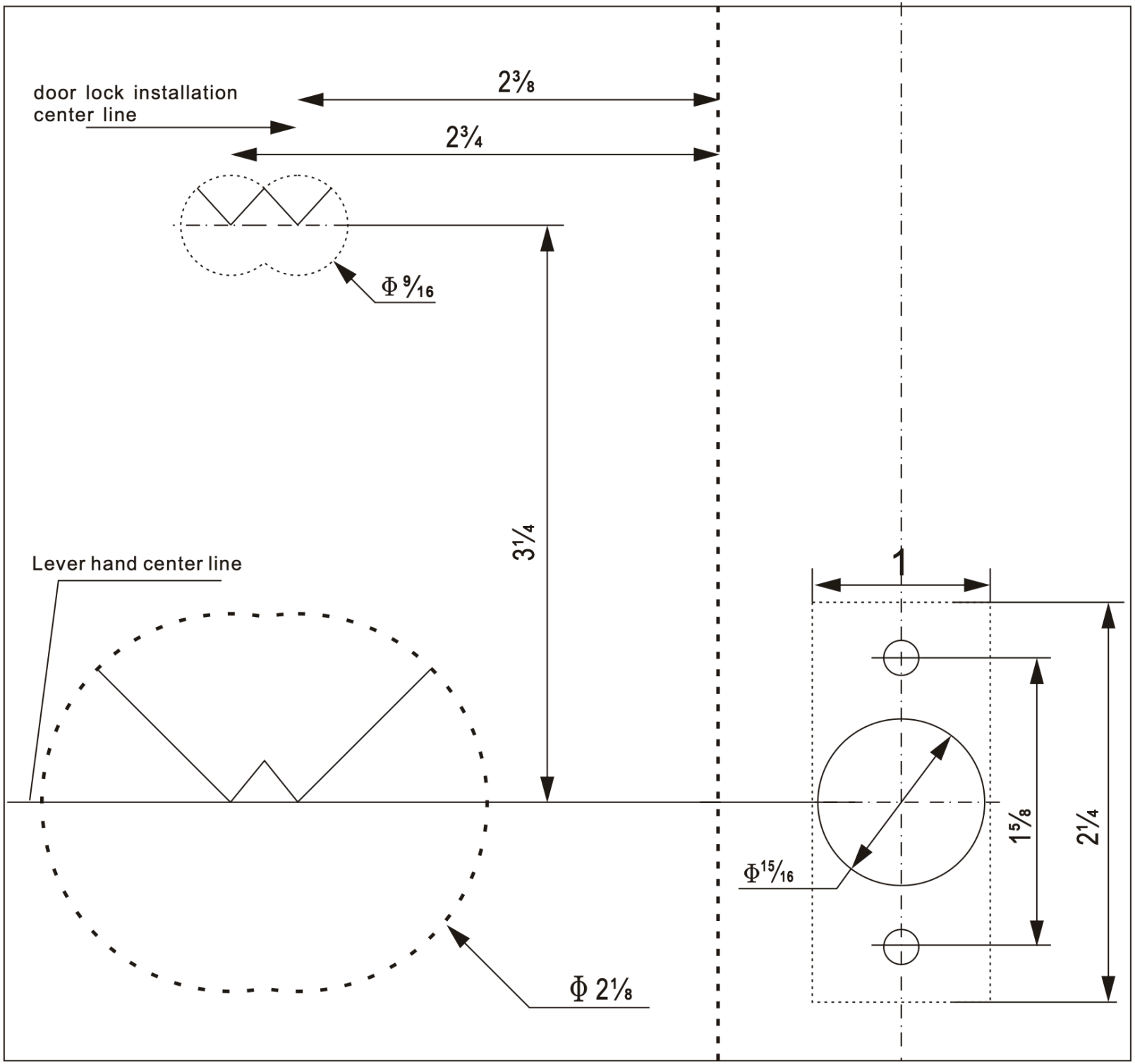
door lock installation
center line
2 3/8
2 3/4
Φ 9/16
3 1/4
Lever hand center line
Φ 2 1/8
1
1 5/8
2 1/4
Φ 15/16