# AP- TT01Z 2 PCS

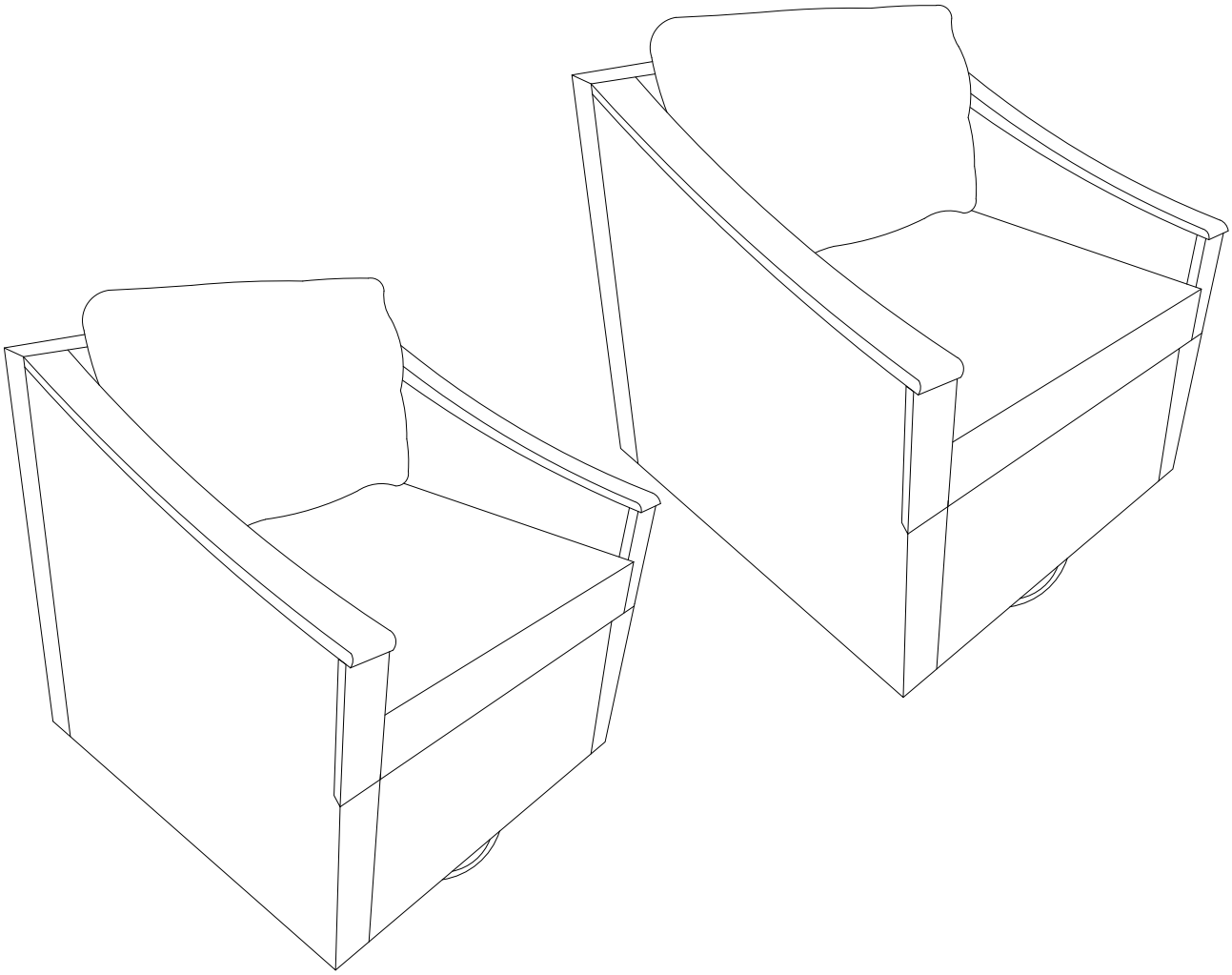

# ASSEMBLY INSTRUCTIONS

# Care & Maintenance

## Caution: You must read this before you proceed

-  Not for commercial use. For residential use only.
-  Prolonged exposure to rain may cause rusting which can stain floors.
-  Do not put hot items directly on furniture surface.
-  Do not clean furniture with harsh cleansers or polish.
-  To obtain the longest lifespan of your outdoor products, minimizing exposure to direct sunlight is recommended.
-  Children should not climb or jump on the furniture.
-  Do not write on furniture without a padded barrier to protect the surface.
-  To obtain the longest lifespan of your outdoor products, avoid extended and lengthy exposure to rain, snow, and direct sunshine.
  Whenever possible cover the product and /or place under patio or awnings.
-  Do not place the product in stone areas or areas that absorb too much sunlight.
-  Stains may be removed with mild soap solution and damp cloth.
-  Keep away from sources of ignition.
-  High-pressure water guns must not be used for cleaning. Dust and pick-up spills using a clean, non-colored, lint-free cloth.

 Tip: We recommend flattening the boxes to use as a protective work surface, or setting up your new furniture on a soft floor like a carpet.

# How to Put on the Cushion Cover

1

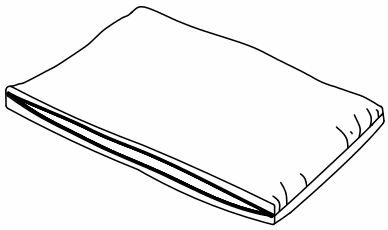

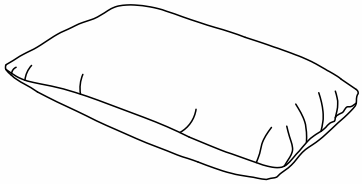

OR

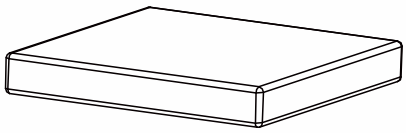

1.Take the cushion covers and inners out of the carton.

2

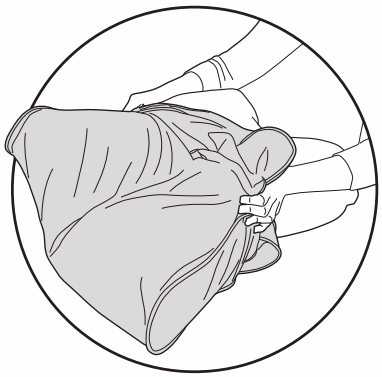

2.Fold the inner in half, pushing the sides together,then begin to slide the cover onto it.

3

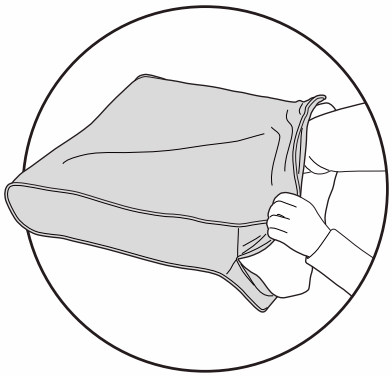

3.Align both far corners, then gently compress insert while fitting cover around it.

4



4.To avoid a stuck zipper, please pull the fabric away from the zipper before moving forward.

5

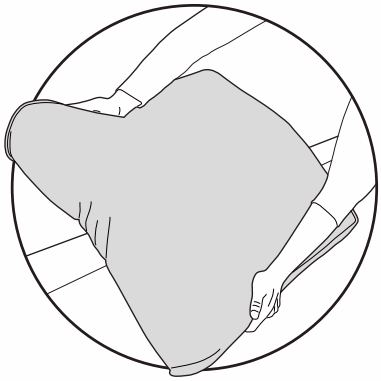

5.When all done, please pat the cushion or give it a little shake to make it more flat.

## Care & Cleaning Guidelines

The covers are machine washable.Before washing, please zip the cover up to avoid catching other clothes.
You can clean the dust on the chair / table / footstool with a damp cloth.

# NOTE:

Vacuum compressed cushions,
Will return to normal shape after  5-7 days use.

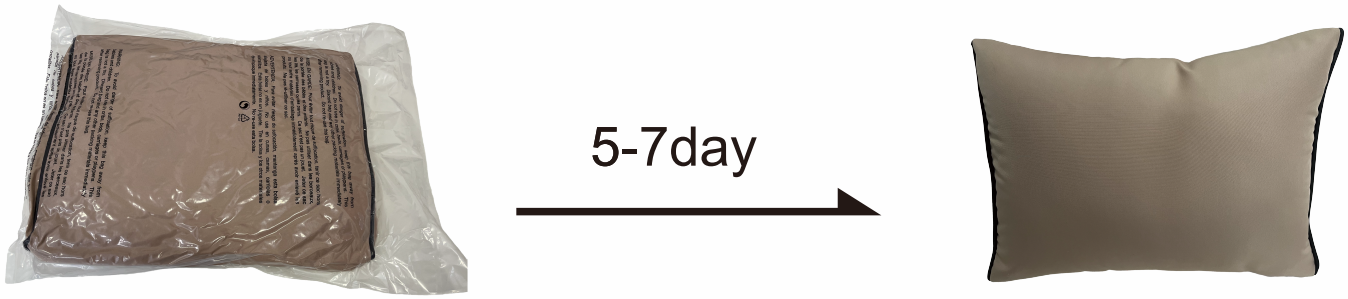


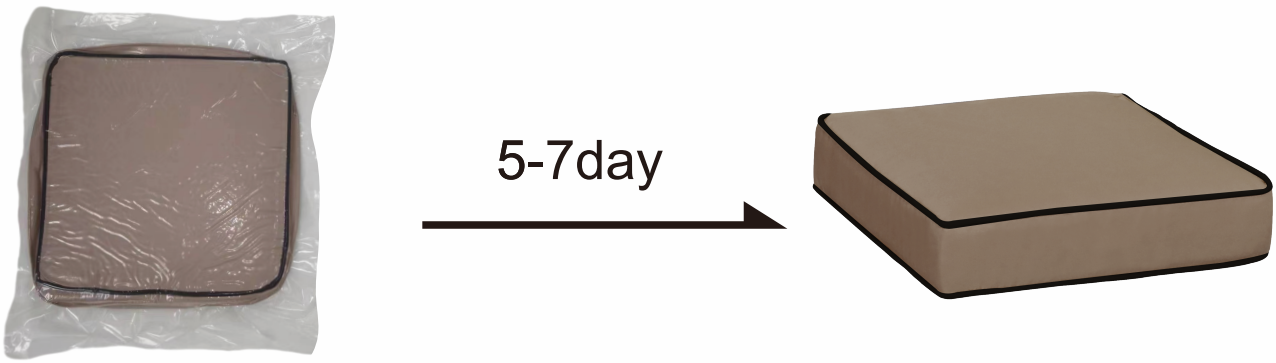

# ASSEMBLY INSTRUCTION



**SWIVEL CHAIR**

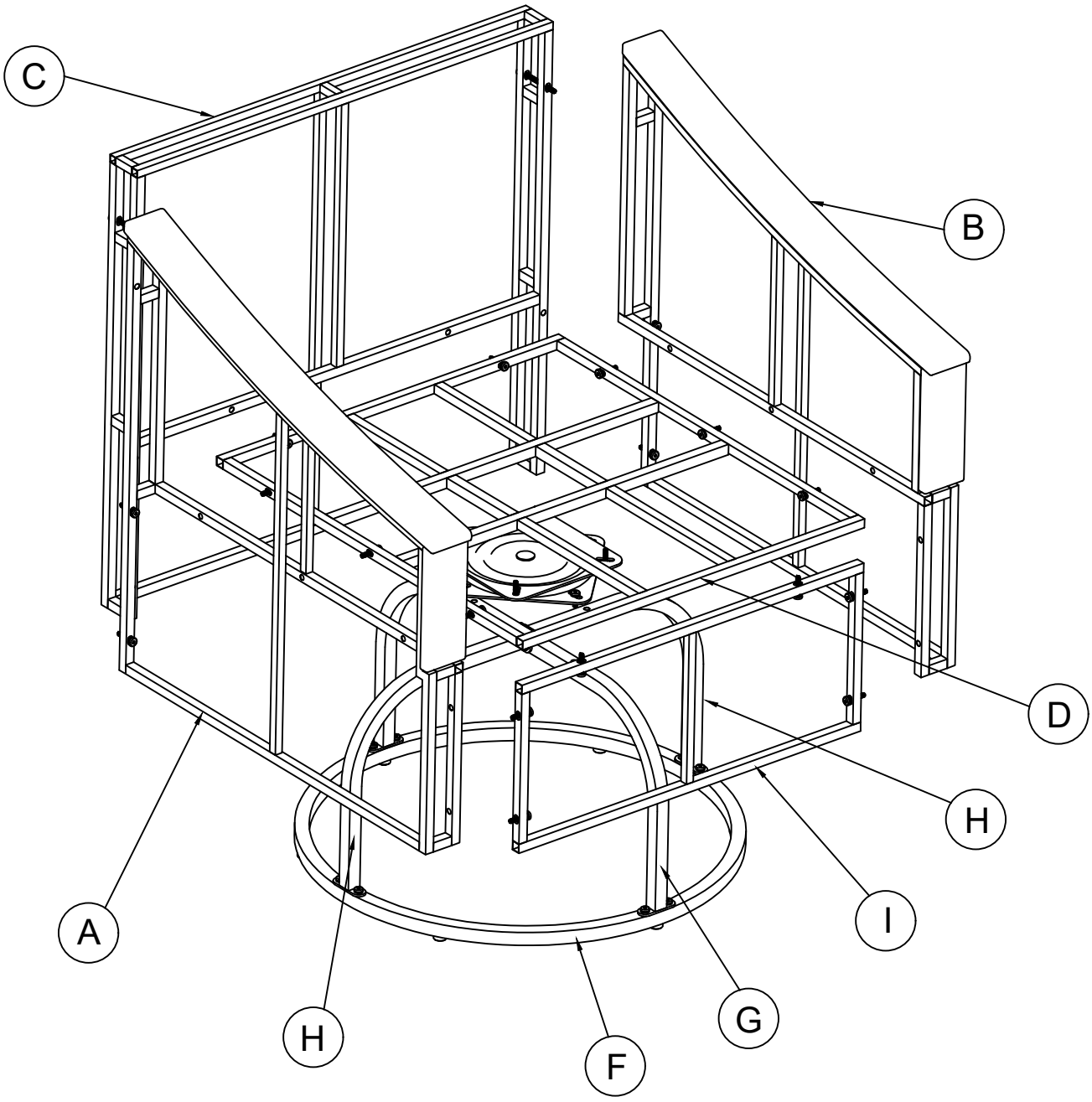

# ASSEMBLY INSTRUCTION

## PARTS

A x 2

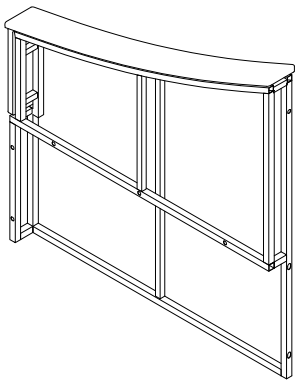

Right Armrest

B x 2

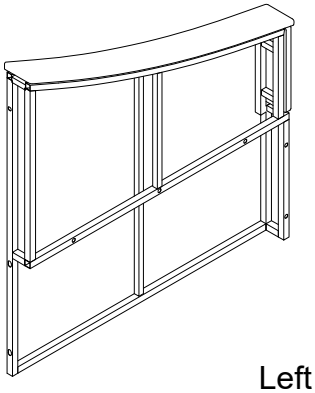

Left Armrest

C x 2

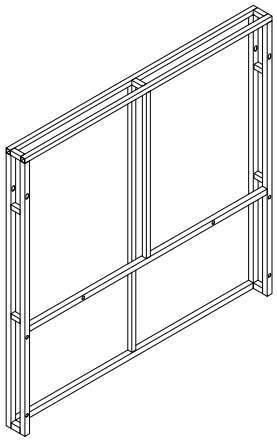

Seat Back

D x 2

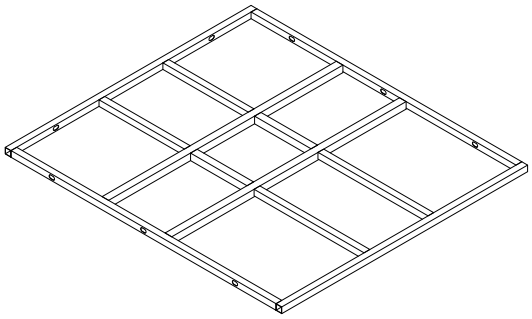

Seat Base

I x 2

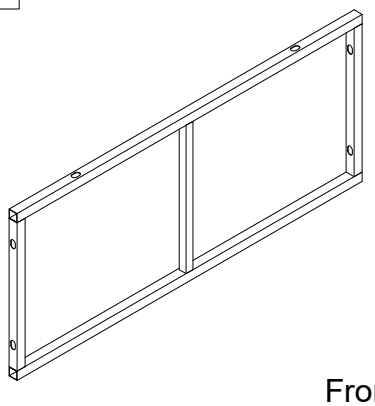

Front Panel

F x 2

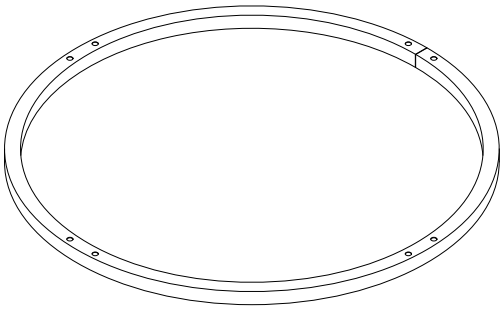

Leg Cicrumference

G x 2

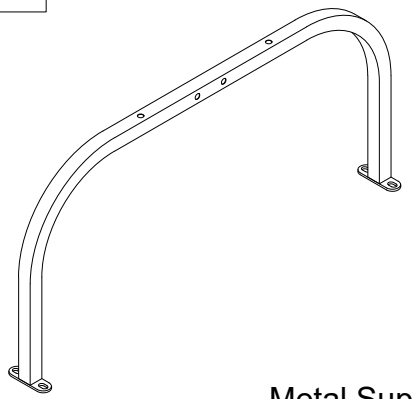

Metal Support Bar

H x 4

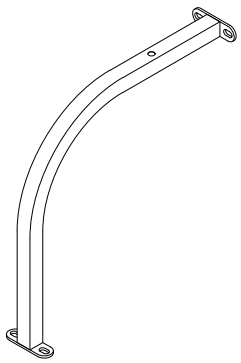

Metal Support Bar

# ASSEMBLY INSTRUCTION

## PARTS

| | |
|---|---|
| L x 2<br>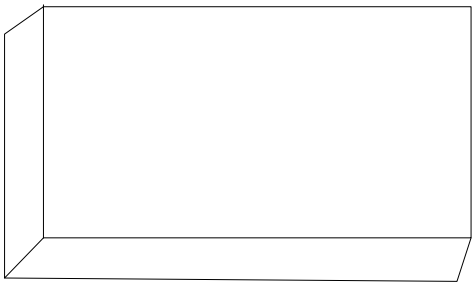<br>Foam Cushion Core | M x 2<br>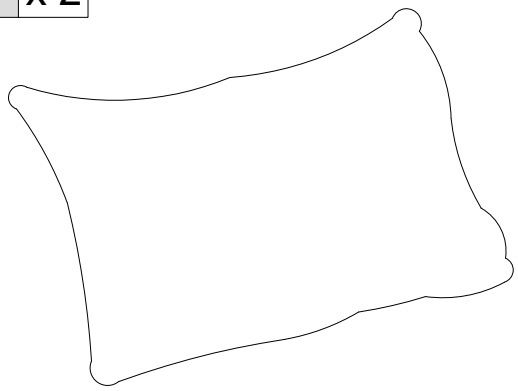<br>Back Cushion |
| N x 2<br>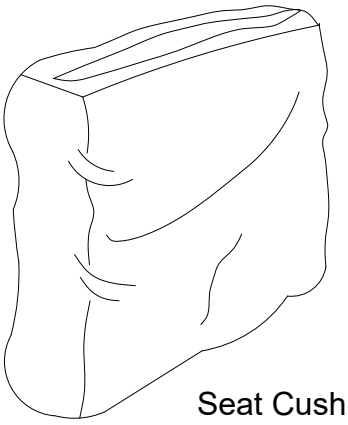<br>Seat Cushion Cover | |

| | |
|---|---|
| 1 x 80<br>M6x1<br> | 2 x 32<br>M6x15<br>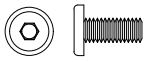 |
| 3 x 12<br>M6x15<br> | 4 x 36<br>M6x30<br>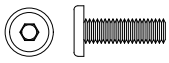 |
| 5 x02<br>4x60<br>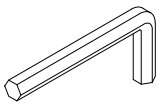 | 6 x 04<br>M6x40<br> |
| 7 x01<br>Key 10<br>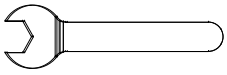 | 8 x 04<br>M6x75<br> |
| 9 x 04<br>M6<br>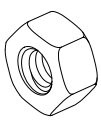 | 10 x 02<br>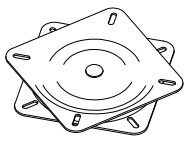 |

01

1 x02

M6

4 x02

M6x30

Do not fully tighten all bolts until assembly is complete.

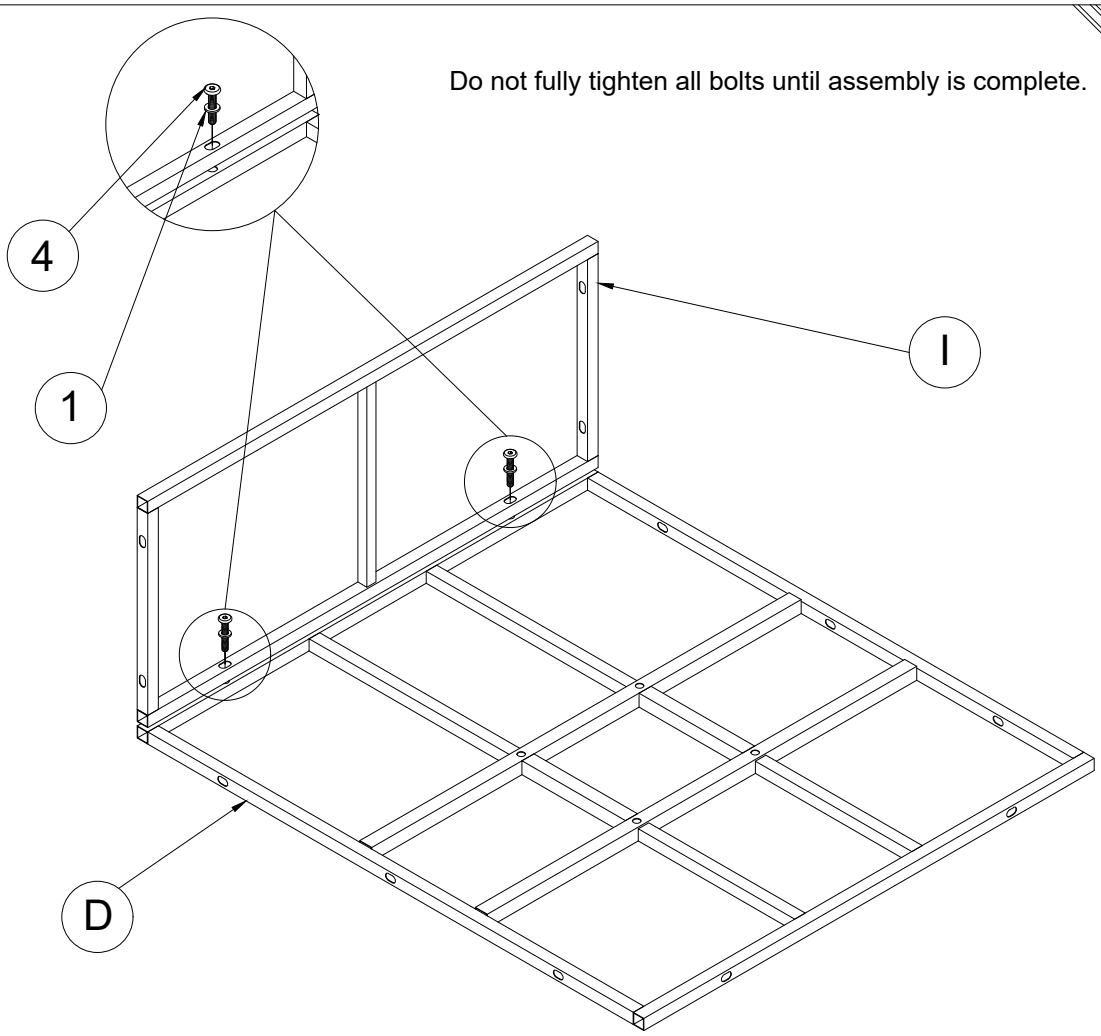


**SWIVEL CHAIR**

02

1 x02

M6

4 x02

M6x30

Do not fully tighten all bolts until assembly is complete.

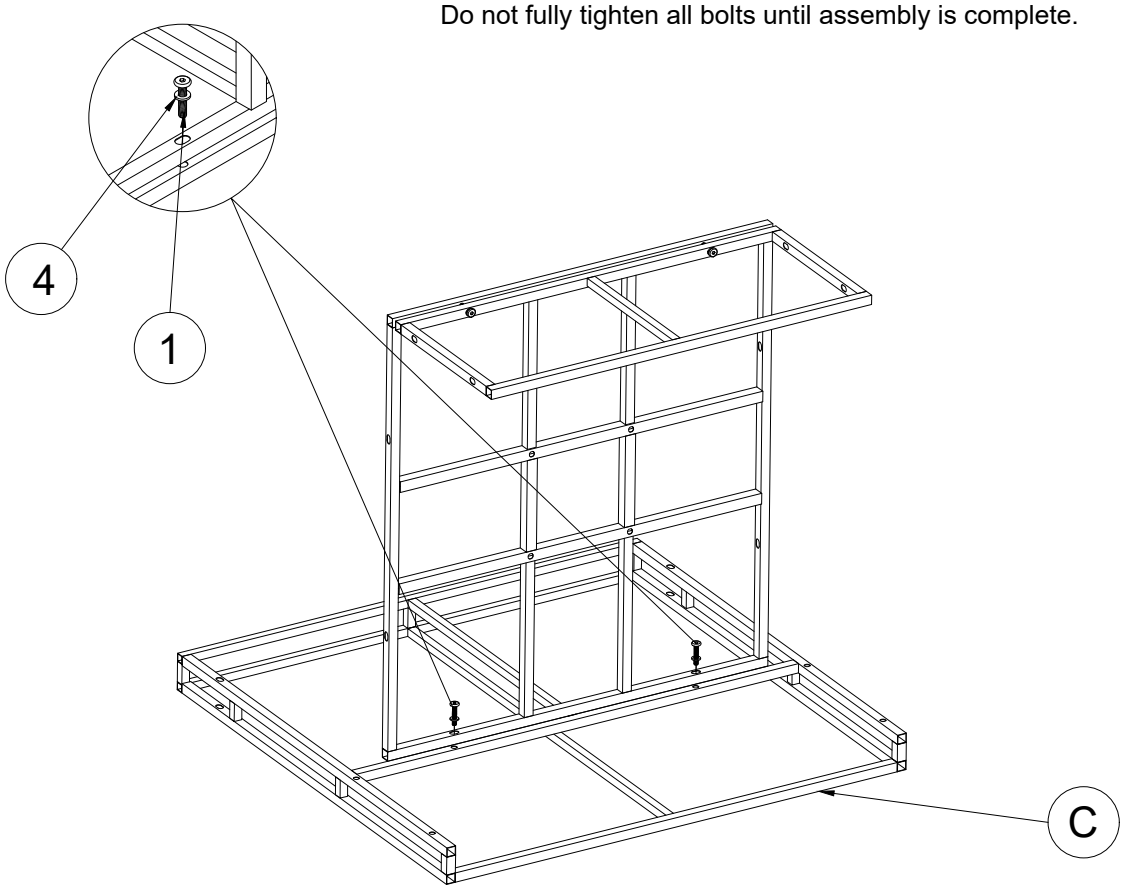


**SWIVEL CHAIR**

03

| | |
|---|---|
| 1 x08 | M6 |
| 4 x07 | M6x30 |
| 8 x01 | M6x75 |

Do not fully tighten all bolts until assembly is complete.

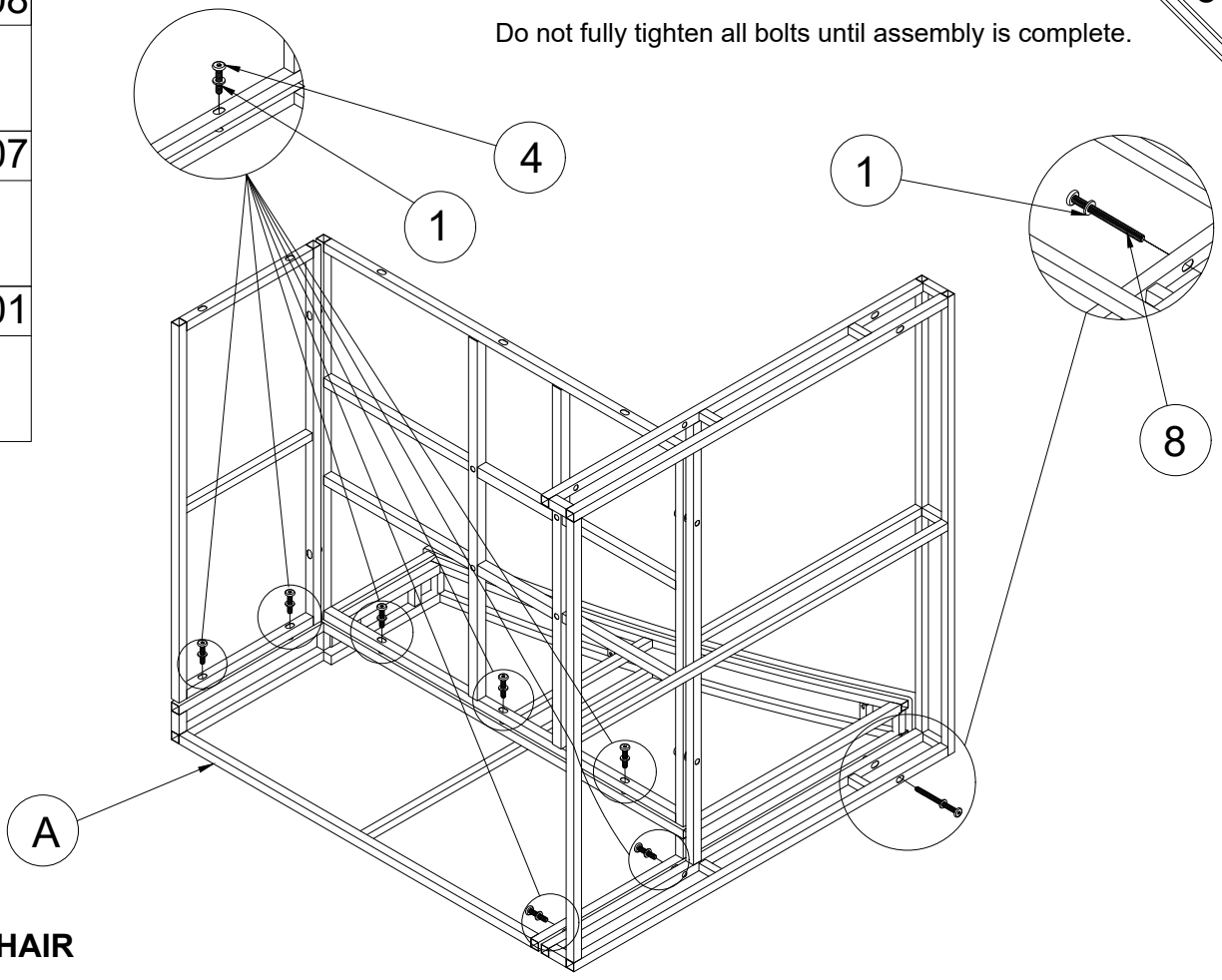


**SWIVEL CHAIR**

04

| | |
|---|---|
| 1 x08 | M6 |
| 4 x07 | M6x30 |
| 8 x01 | M6x75 |

**Fully tighten bolts.**

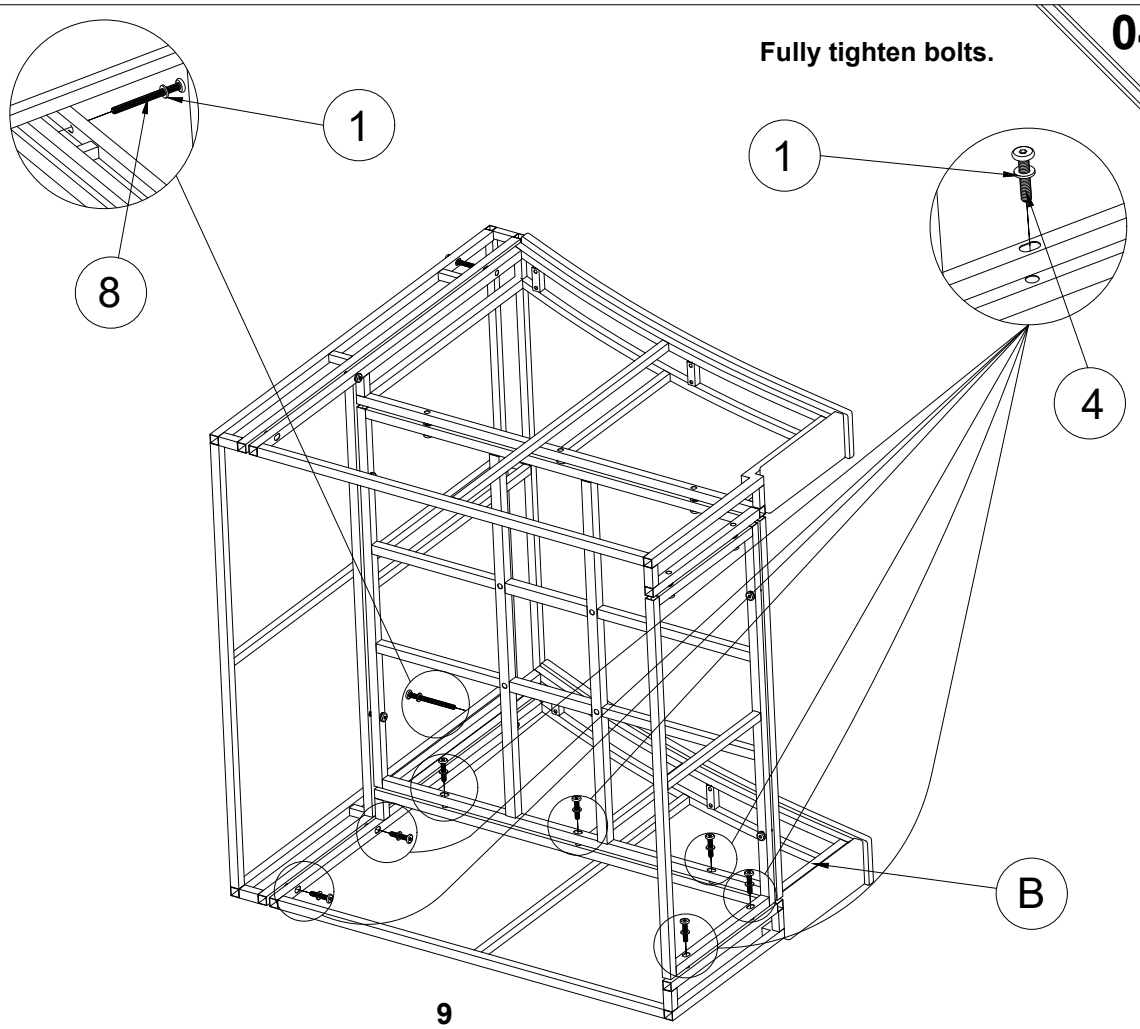


**SWIVEL CHAIR**

05

1 x08

M6

2 x08

M6x15

Do not fully tighten all bolts until assembly is complete.

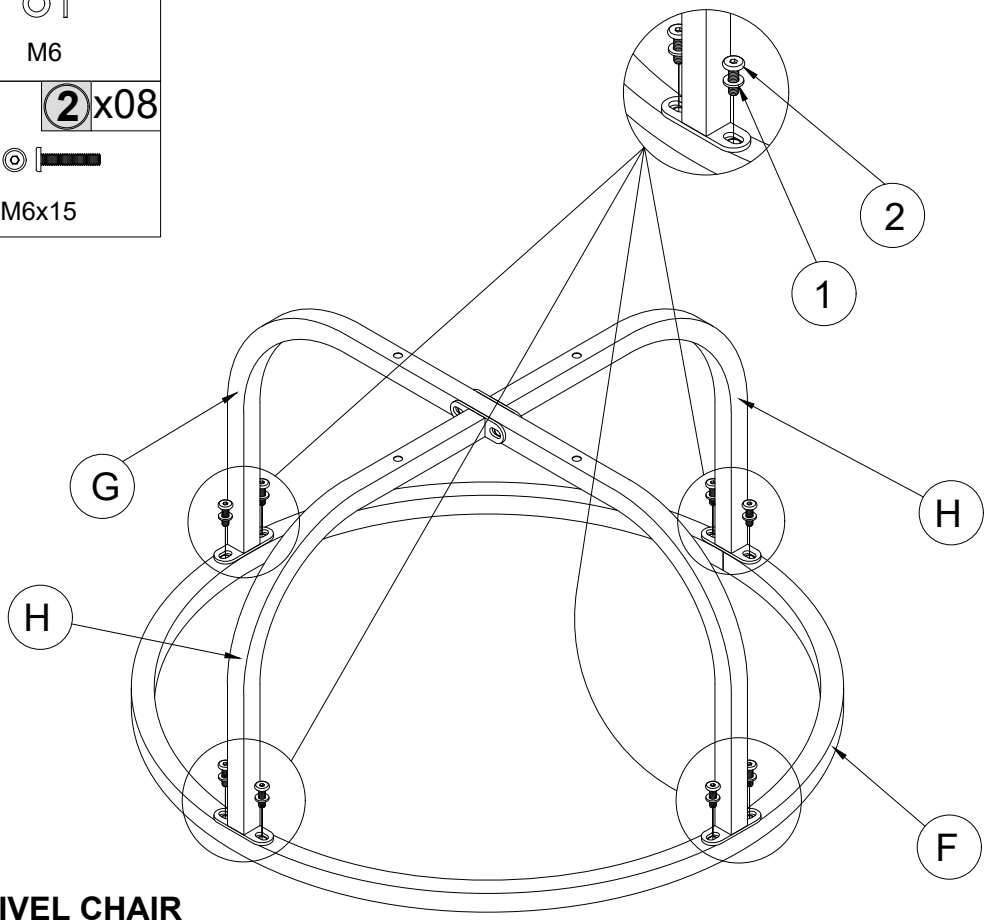


**SWIVEL CHAIR**

06

1 x04

M6

9 x02

6 x02

M6x40

**Fully tighten bolts.**

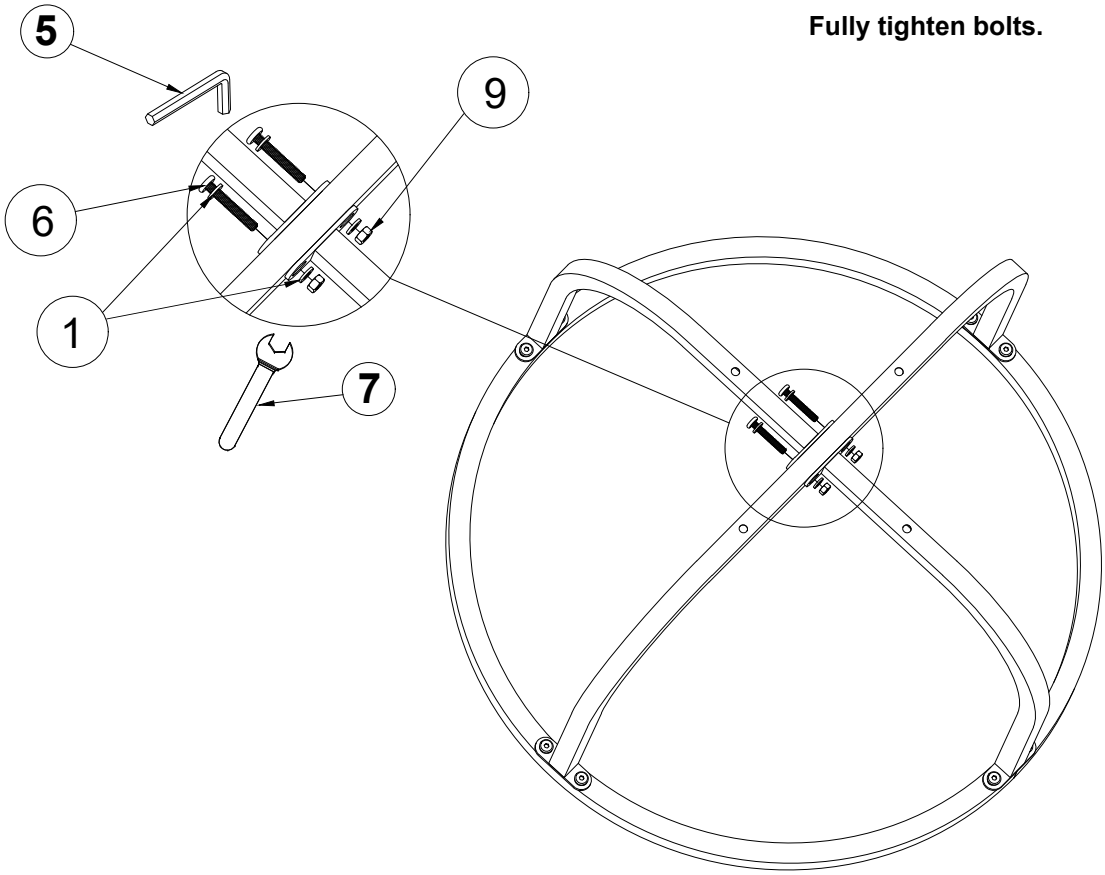

07

Fully tighten bolts.

| | |
|---|---|
| 1 x04 | M6 |
| 2 x04 | M6x15 |
| 10 x01 | |

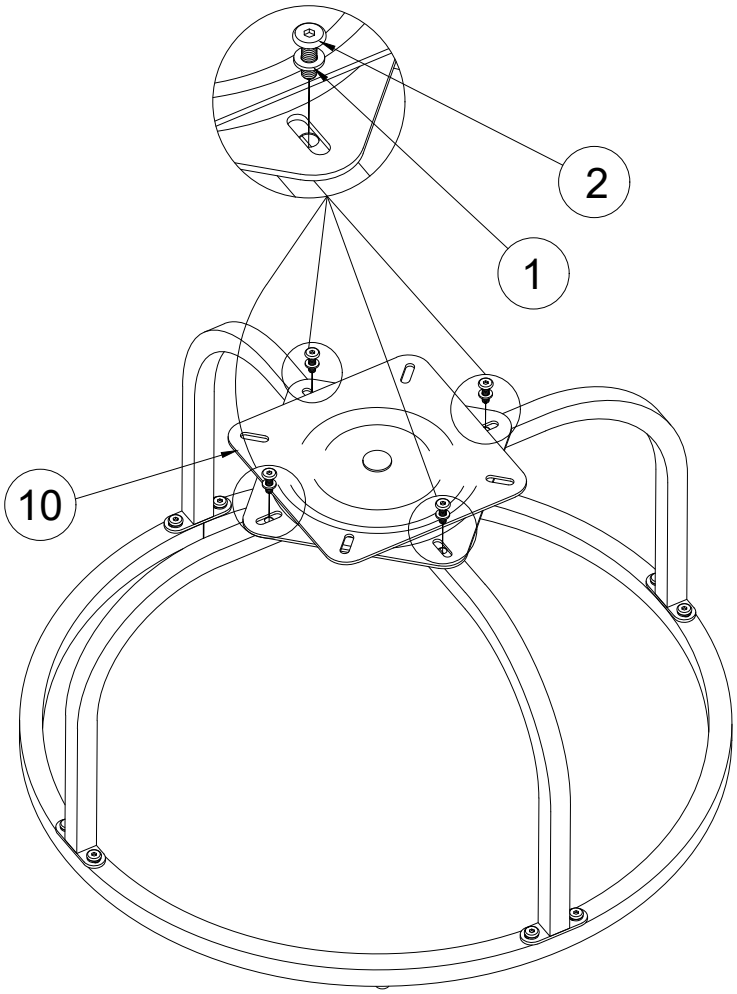


**SWIVEL CHAIR**

08

Fully tighten bolts.

| | |
|---|---|
| 1 x04 | M6 |
| 2 x04 | M6x15 |

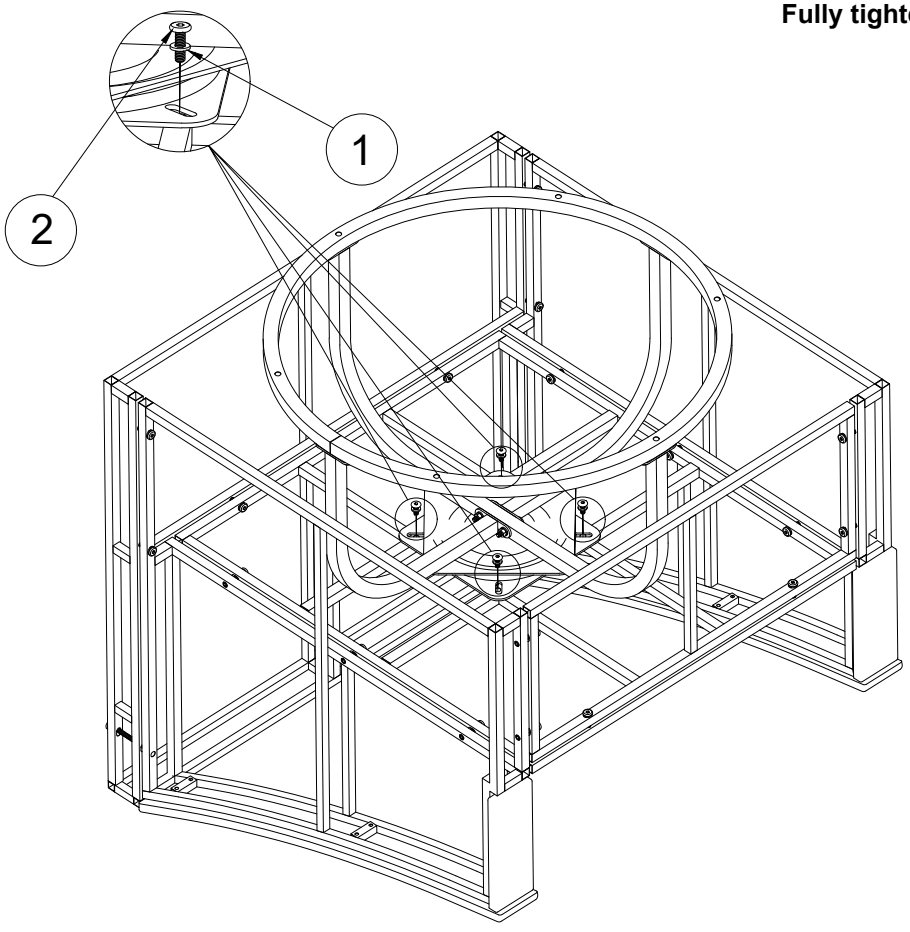


**SWIVEL CHAIR**

③x06



M6x15

**Fully tighten bolts.**

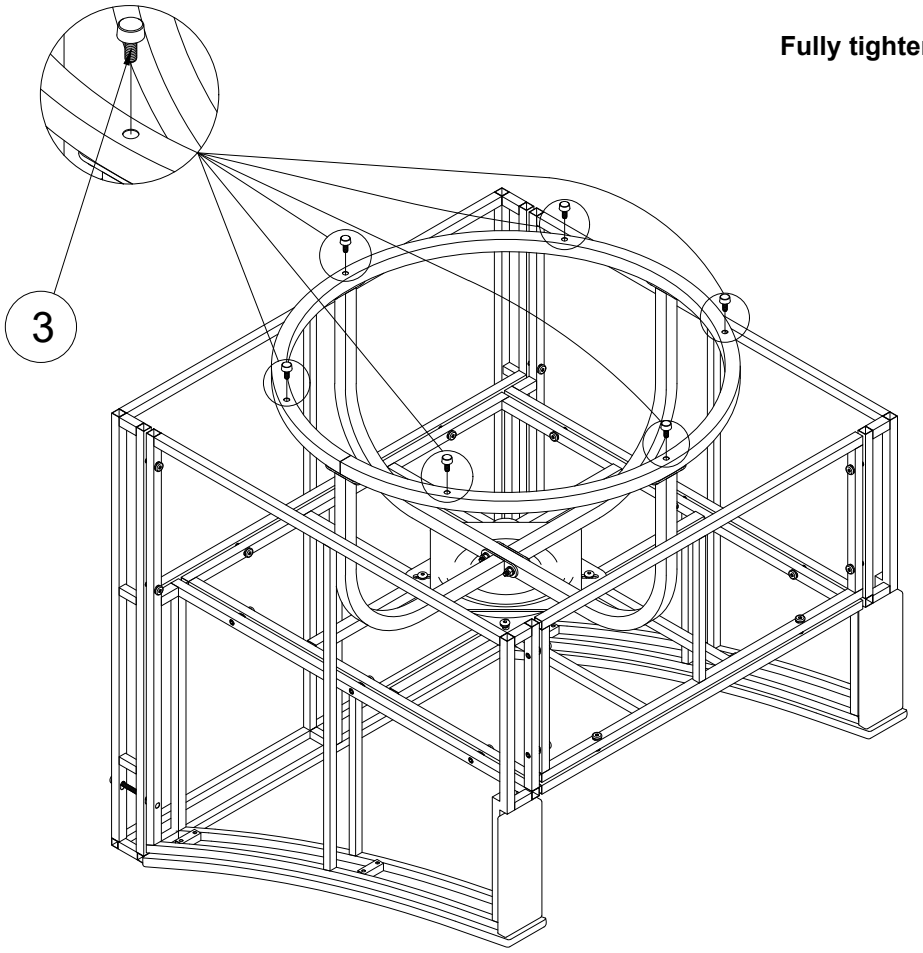


## SWIVEL CHAIR



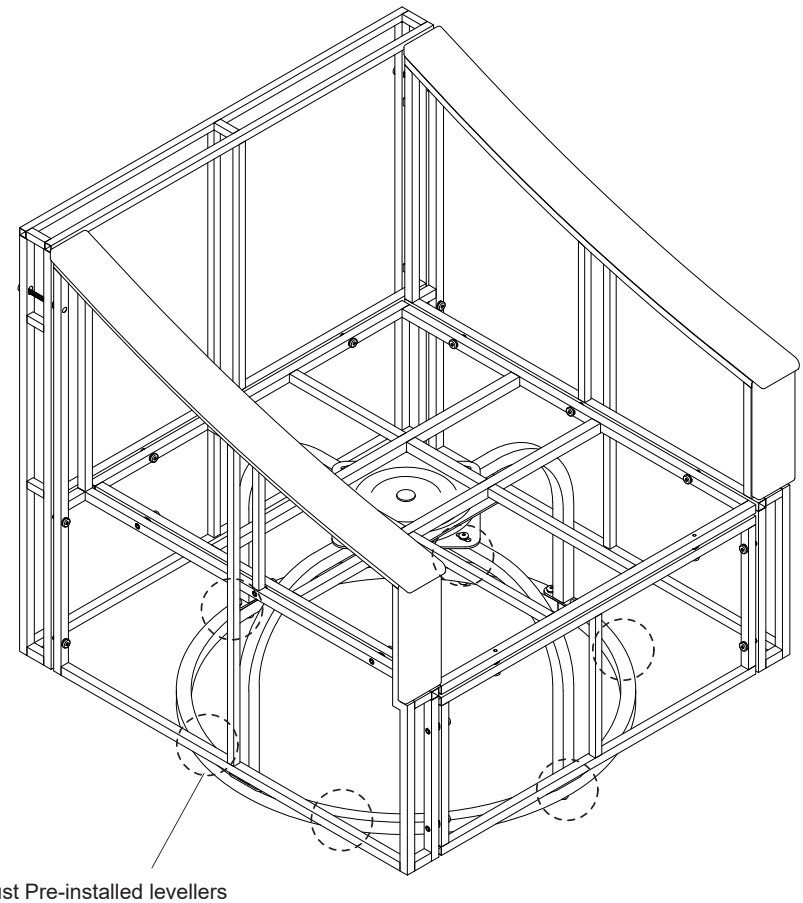

Adjust Pre-installed levellers height for balance

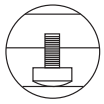

Adjust height for balance

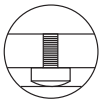

Adjust low for balance

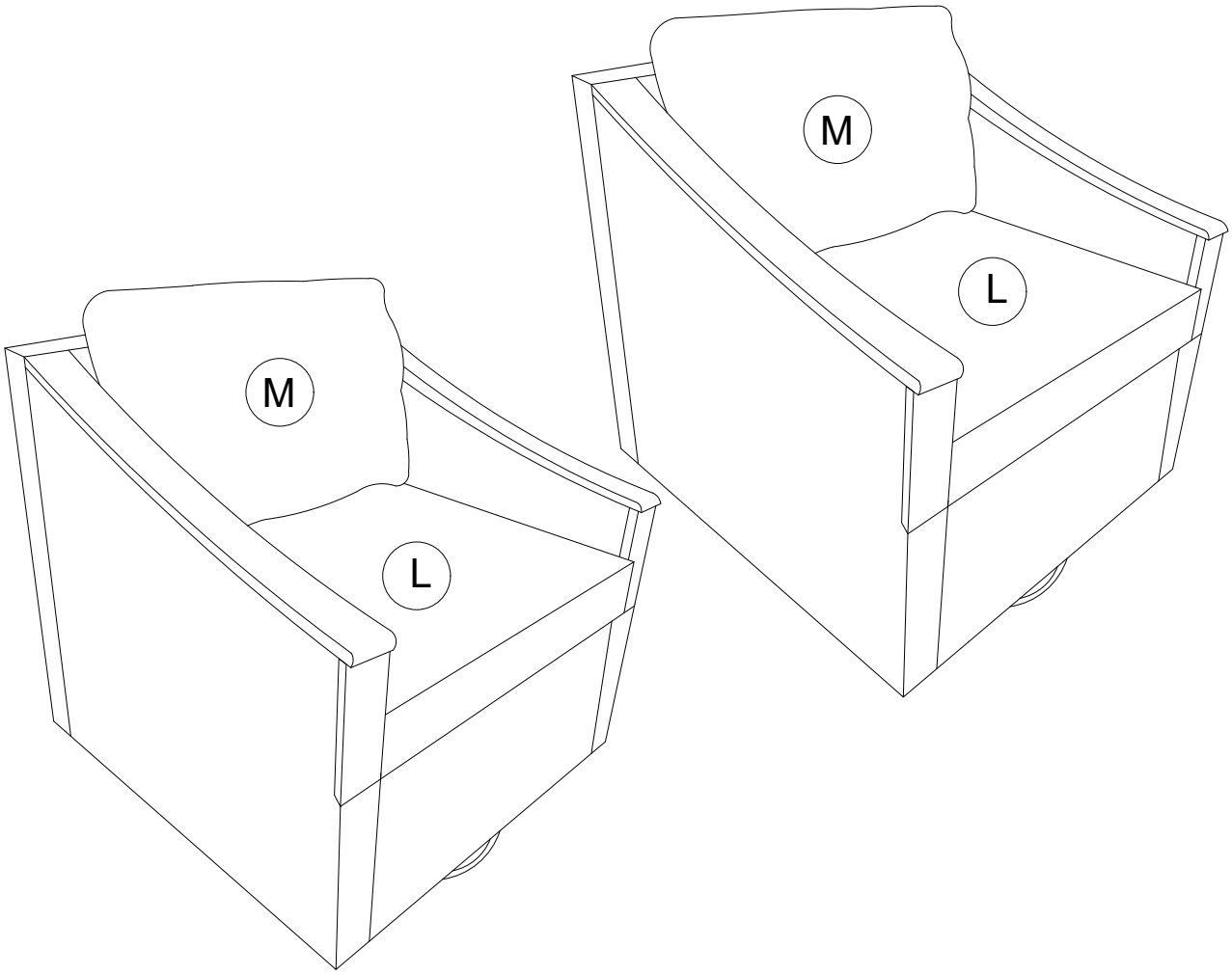
M
L
M
L