USER MANUAL

55-INCH MANTEL

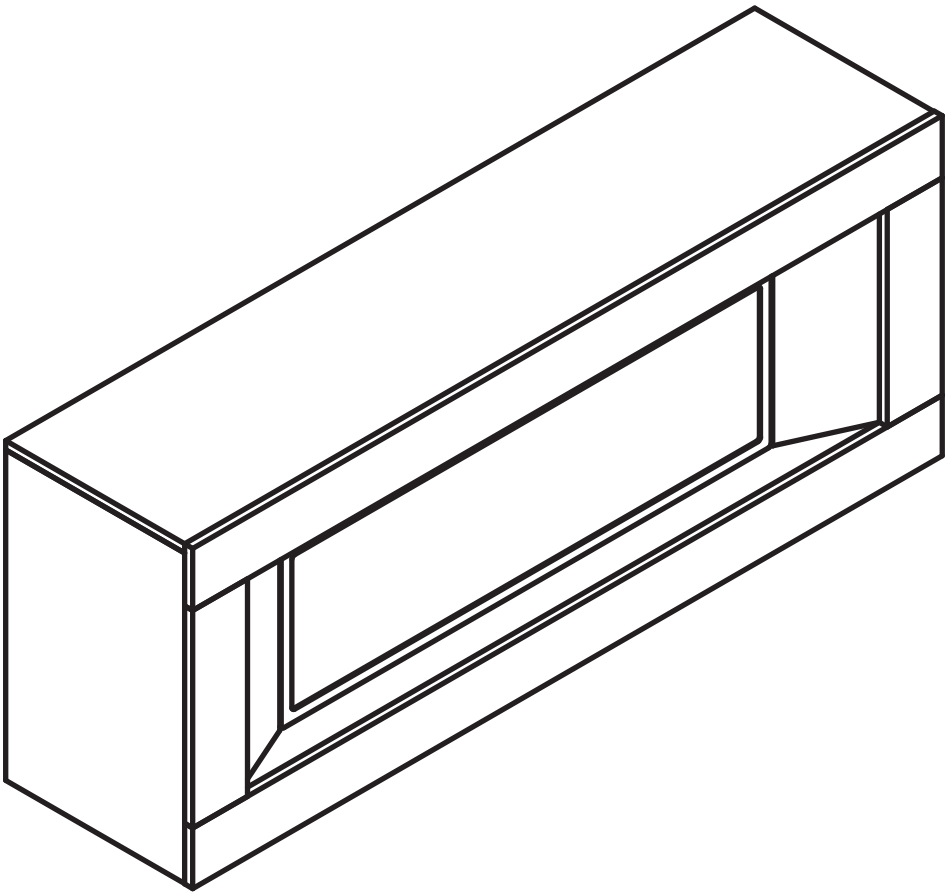

fireplace_service@hotmail.com

GENERAL GUIDELINES

Ⅰ. Before assembly, please make sure all parts and hardware are included.
Ⅱ. Follow each step carefully to ensure proper assembly of the product.
Ⅲ. Two people are recommended for easier assembly.
Ⅳ. A Phillips-head screwdriver is required for assembly.

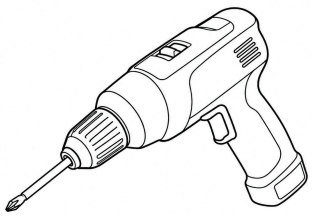

An electric screwdriver will help a lot.

If any parts are missing or damaged,
please contact us for assistance.

fireplace_service@hotmail.com

PARTS LIST

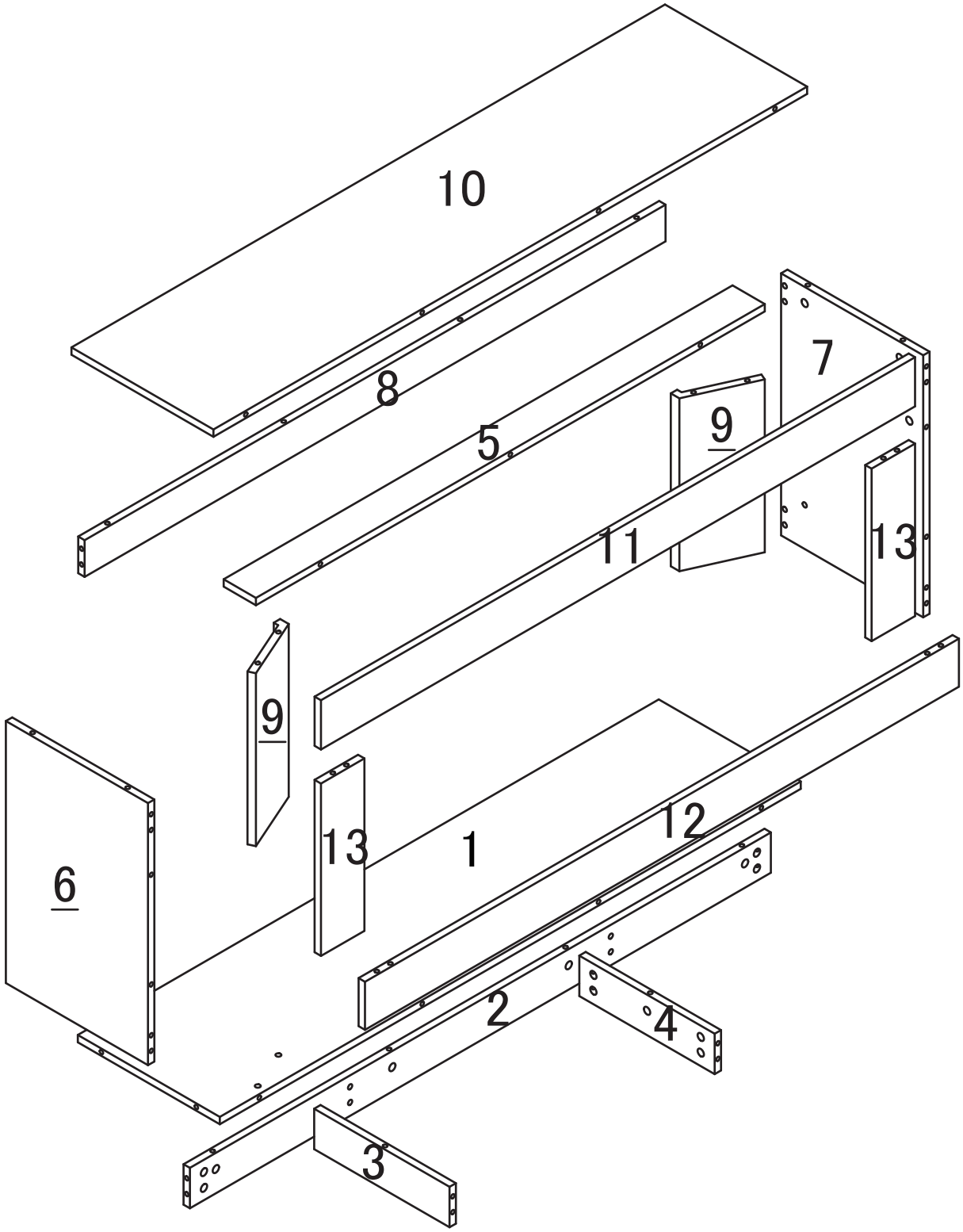

ACCESSORIES LIST

A			CAMLOCK	65+3PCS
B			CAMLOCK	65+3PCS
C	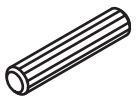		Wooden dowel	8+3PCS

Extra screws are provided as spares. It is normal to have some left over after assembly.

PART	IMAGE	DESCRIPTION		QTY
AA	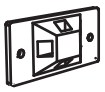		Mounting bracket	2PCS
AB	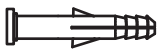		Anchor	2PCS
AC			Nylon strap	1PC
AD		ϕ4*15	Flat head screw	2PCS
AE		ϕ4*30	Flat head screw	2PCS

STEP-01

A X10

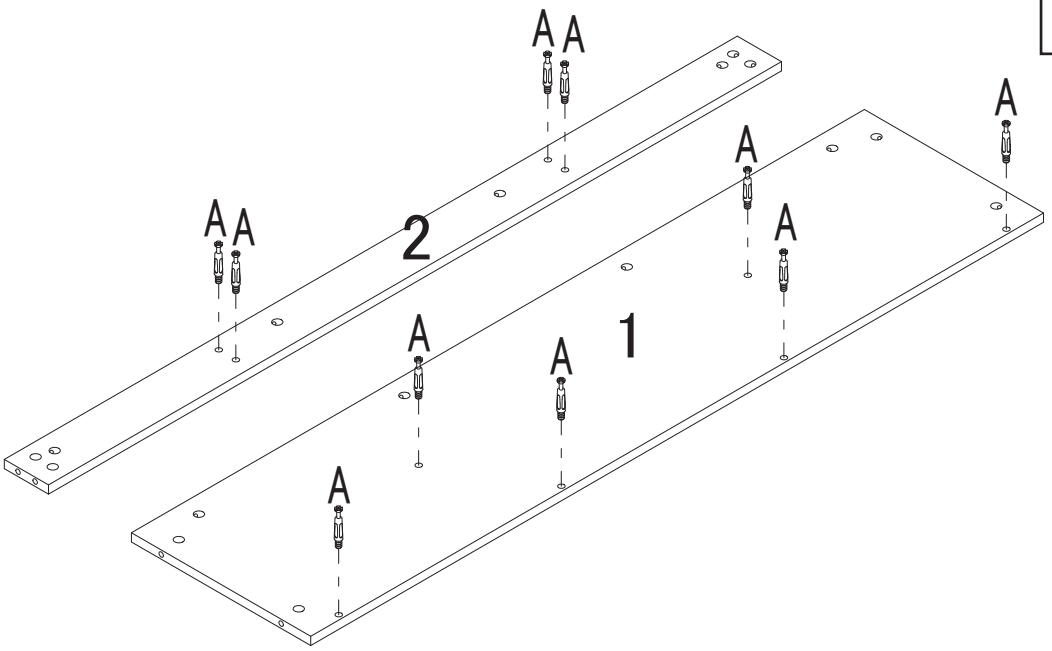

STEP-02

B X4

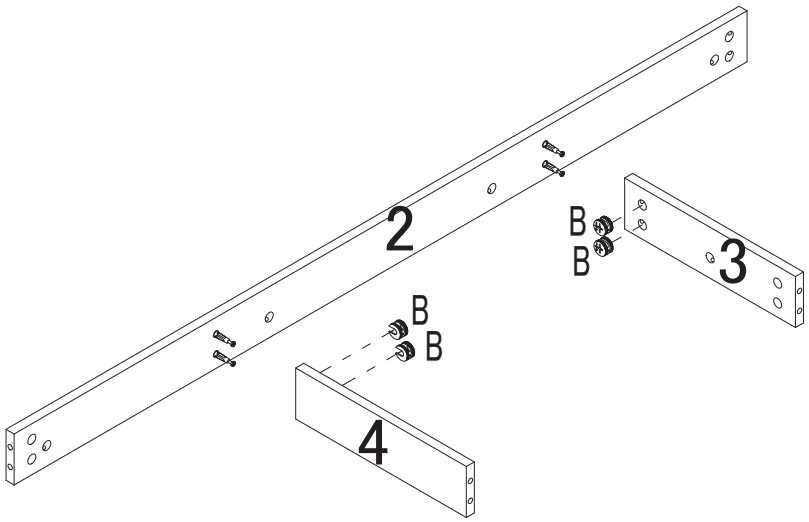

STEP-03

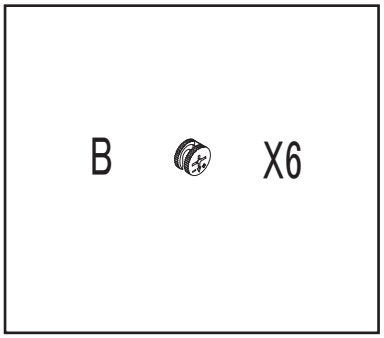

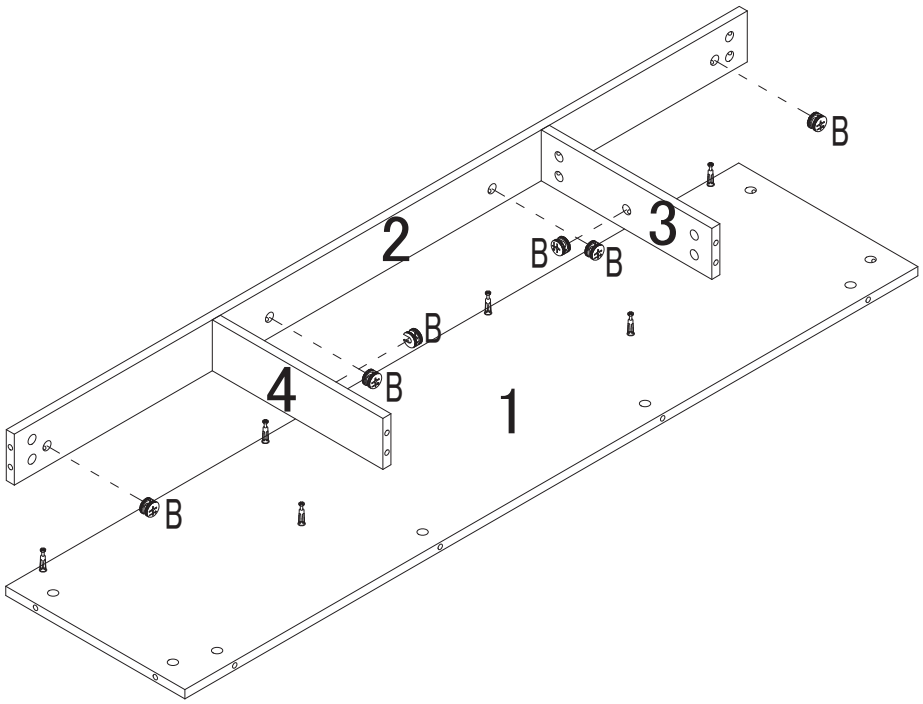

STEP-04

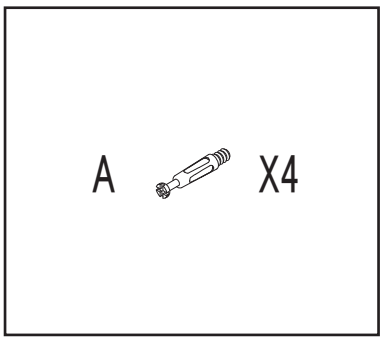

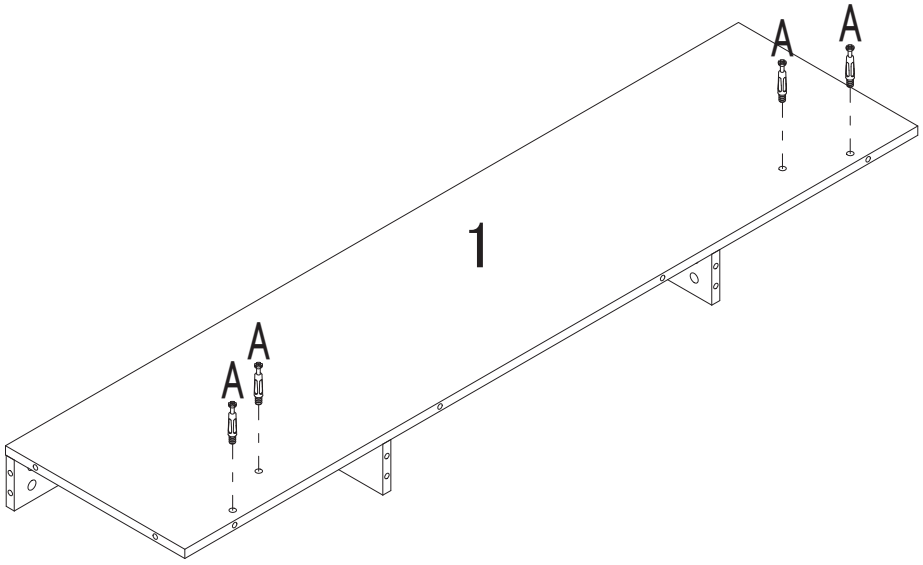

STEP-05

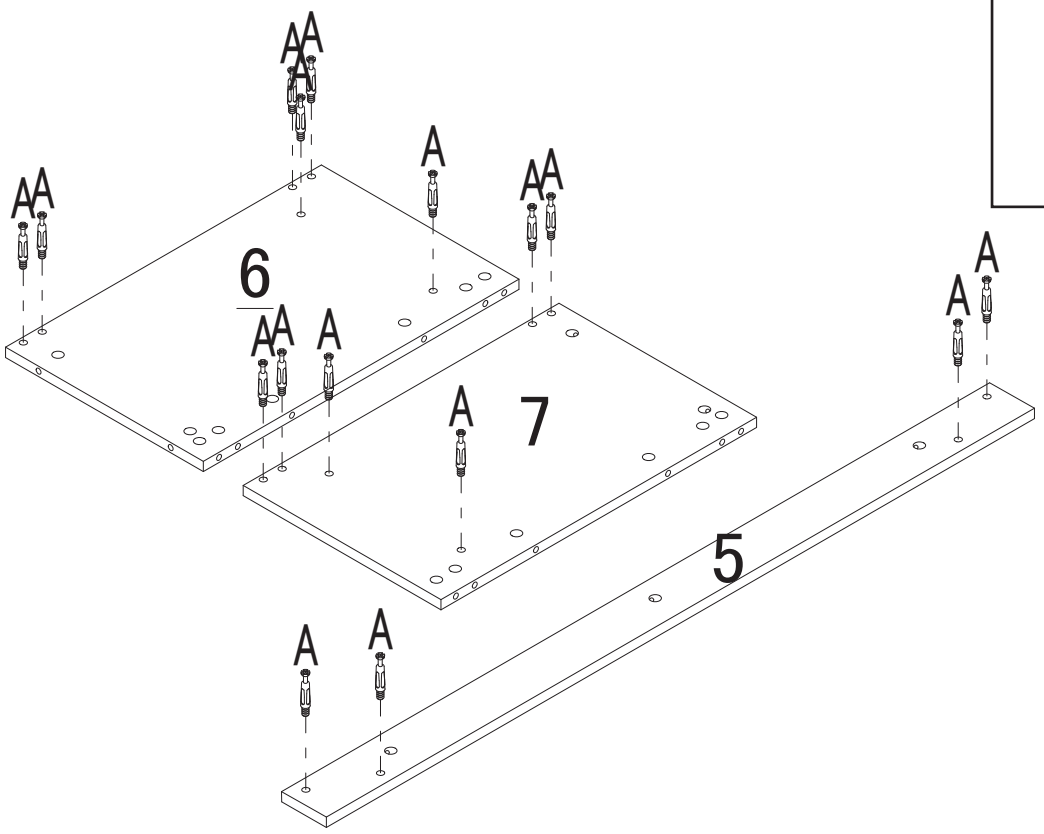

STEP-06

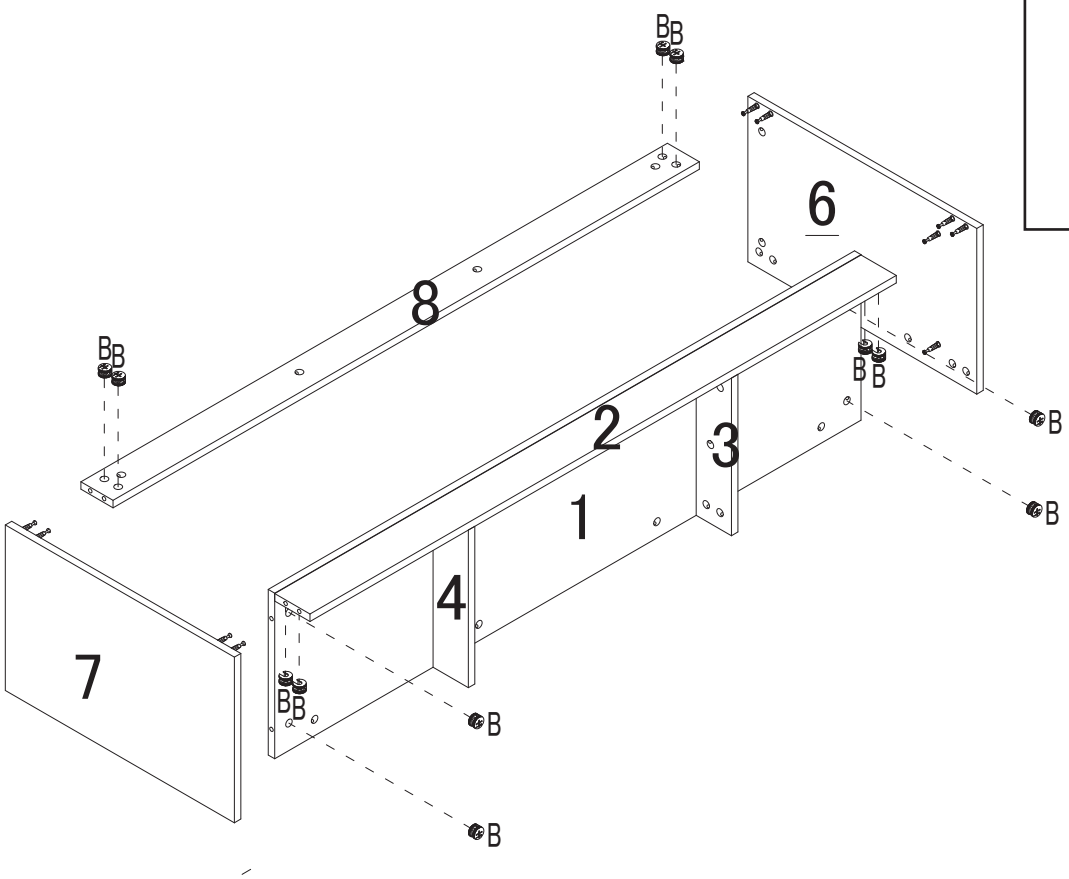

STEP-07

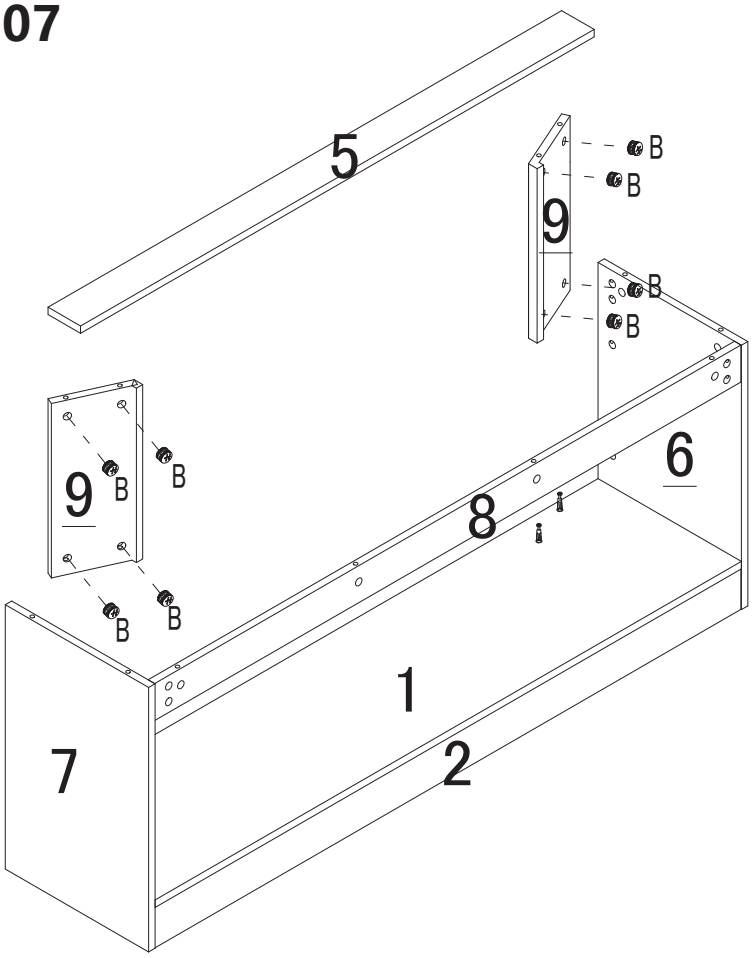

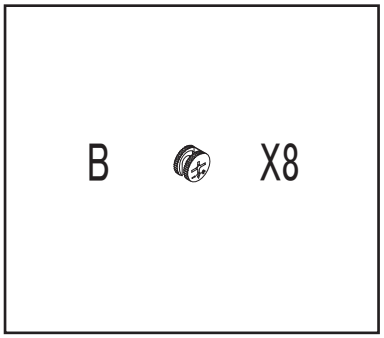

STEP-08

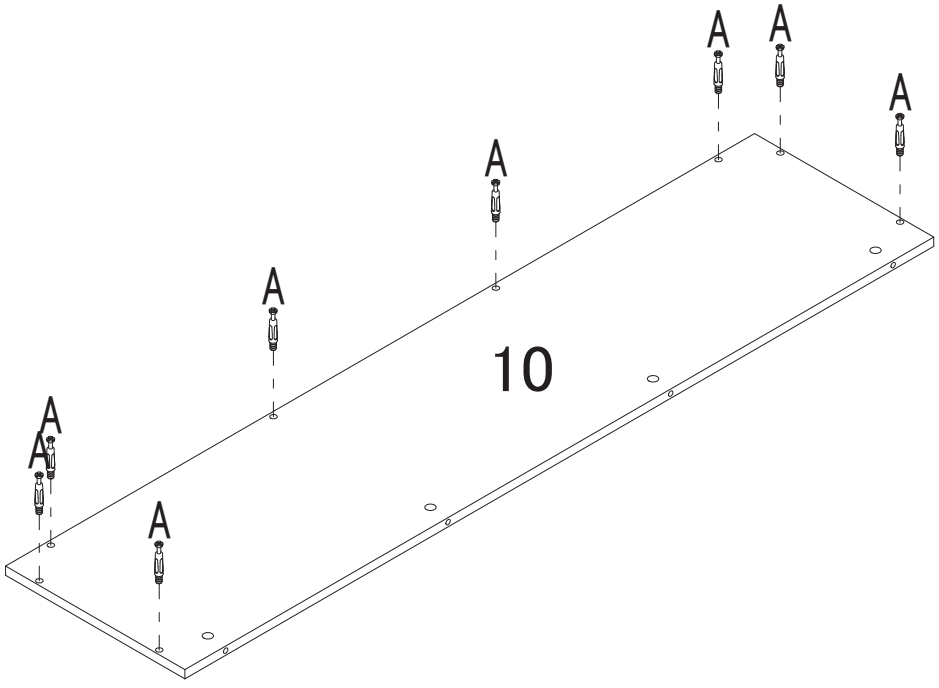

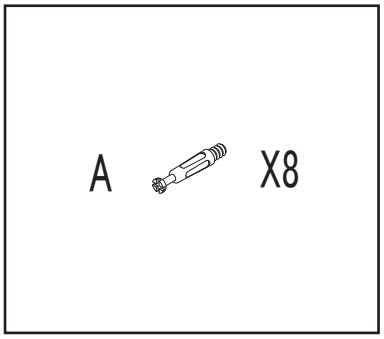

STEP-09

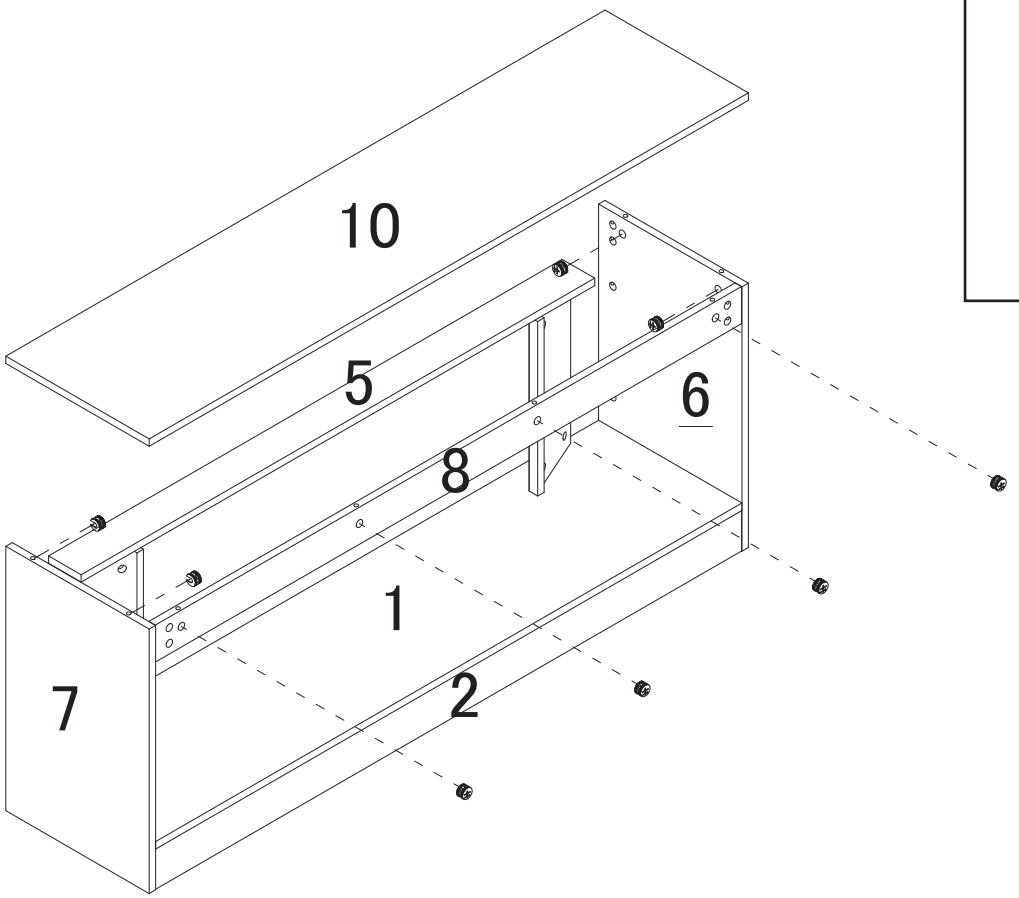

B X8

STEP-10

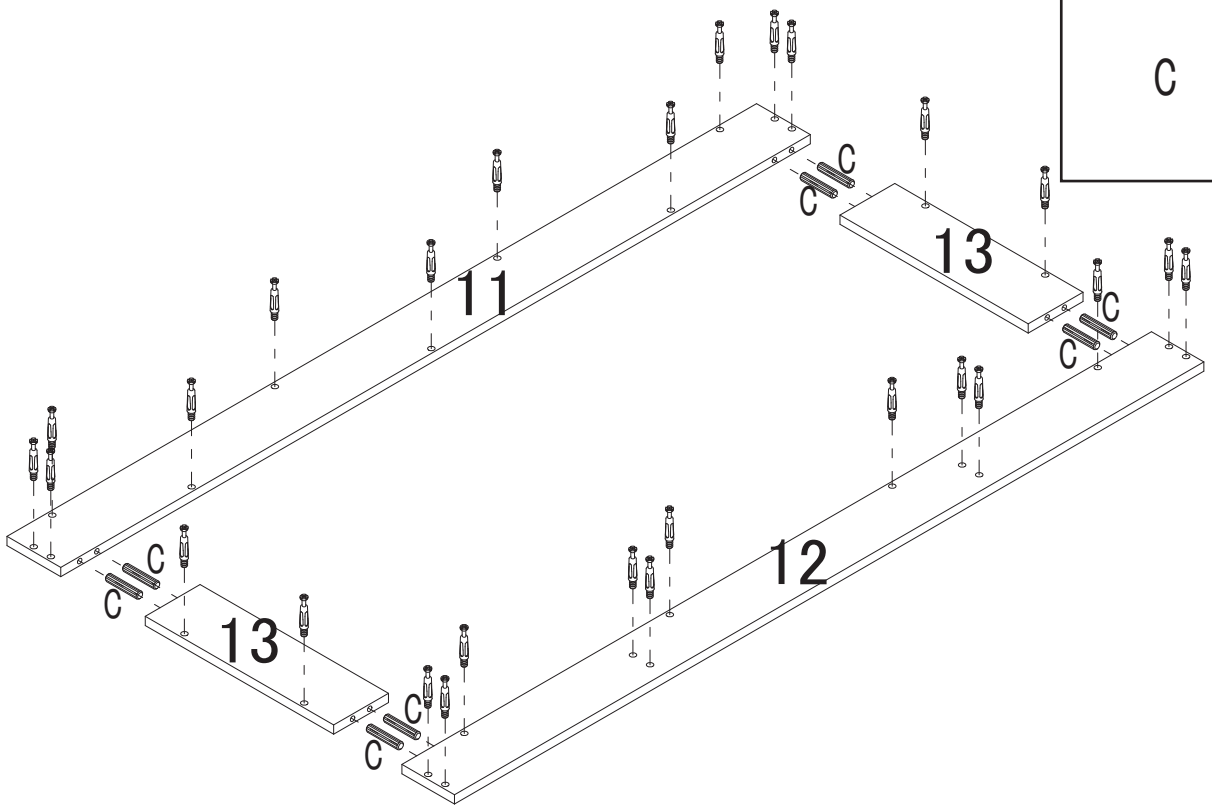

A X27

C X8

STEP-11



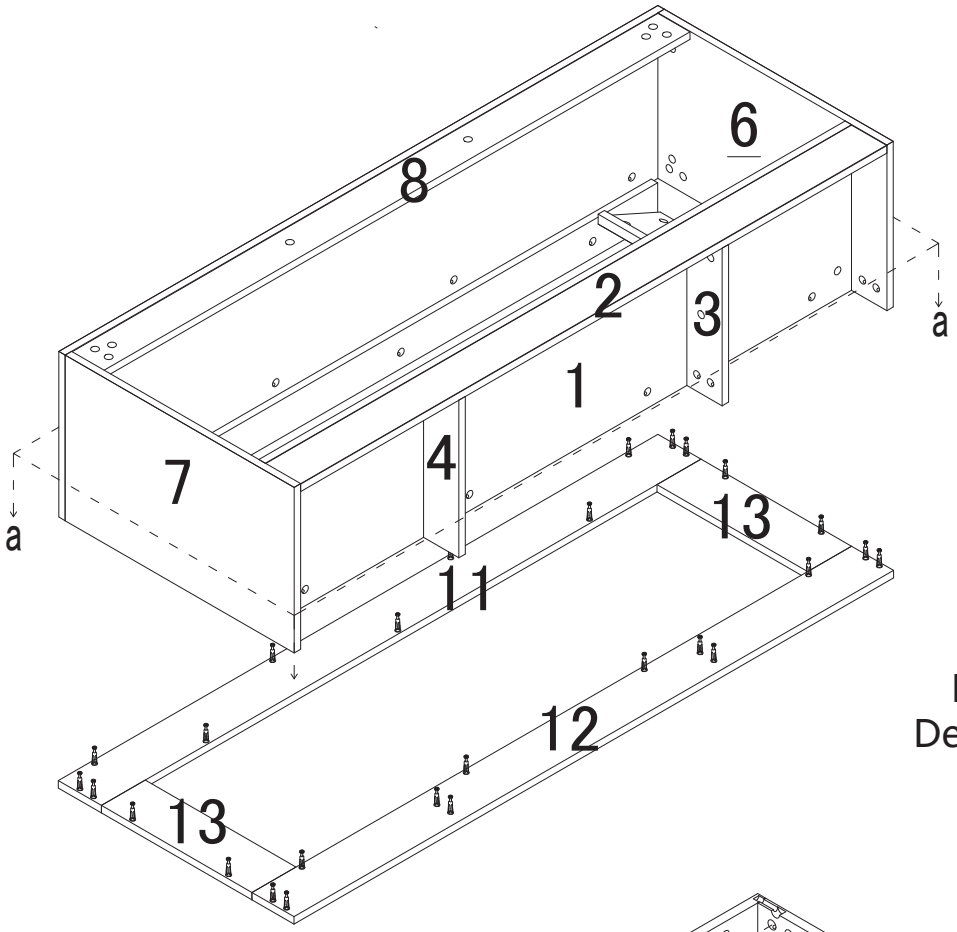

Perspective View:
Determine the positions for screwing.

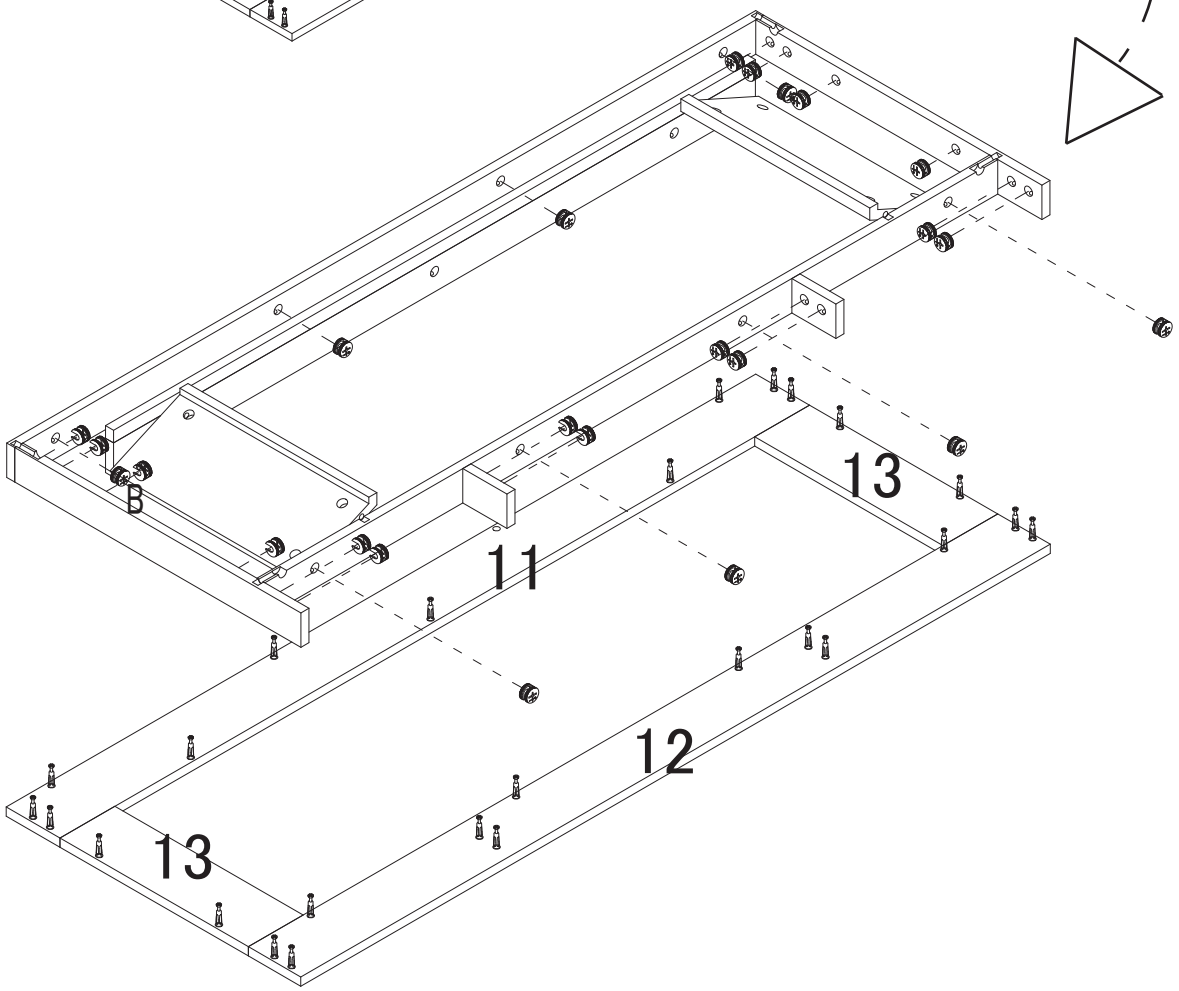

STEP-12

The screws for this step are in the fireplace carton.

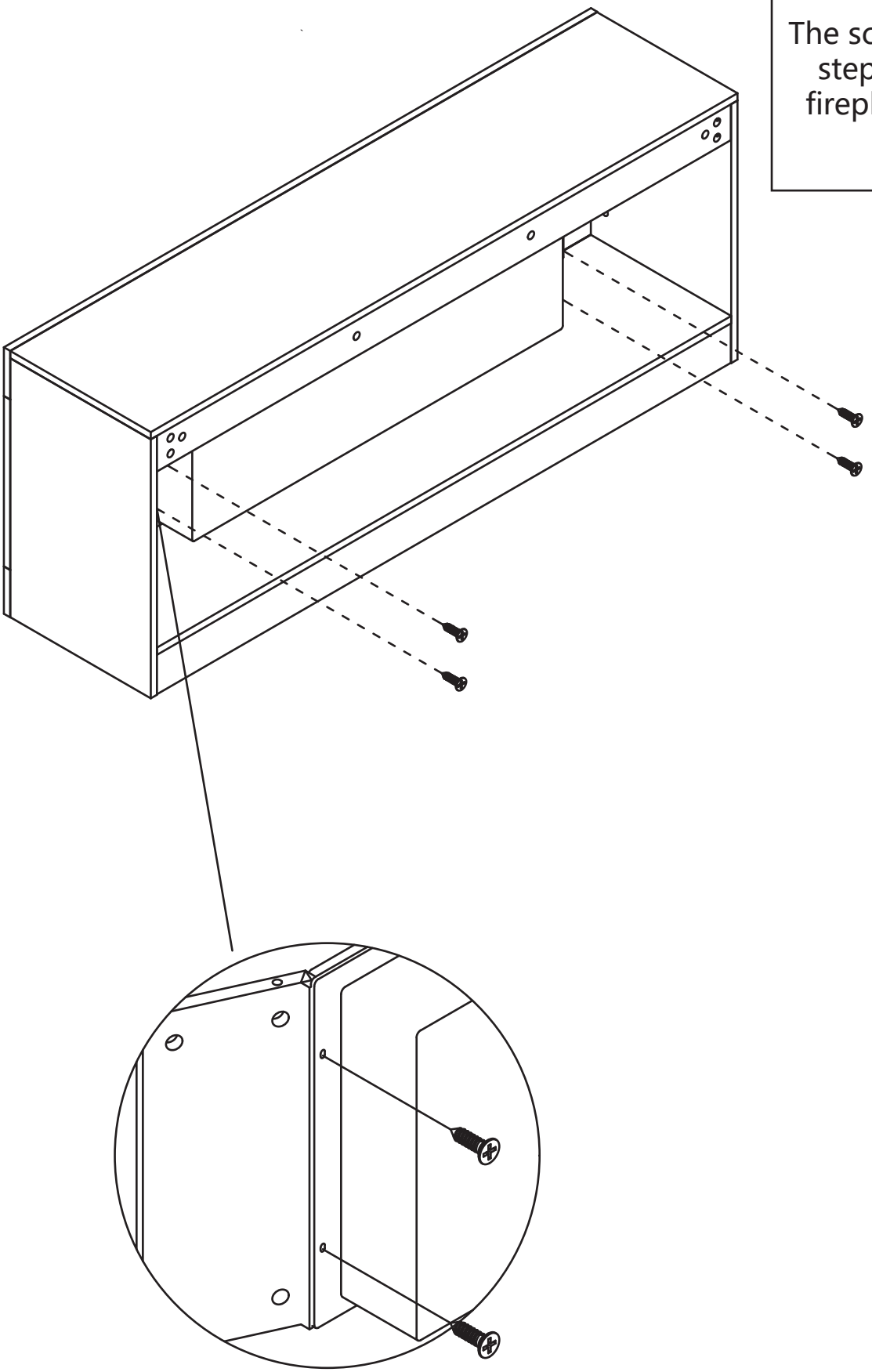

WALL ANCHORING

IMPORTANT: To prevent injury from tip-over,
the wall anchoring steps are mandatory.

STEP-01

Fix one of brackets (AA) to mantel top with screws (AD).

AA X1

AD X2

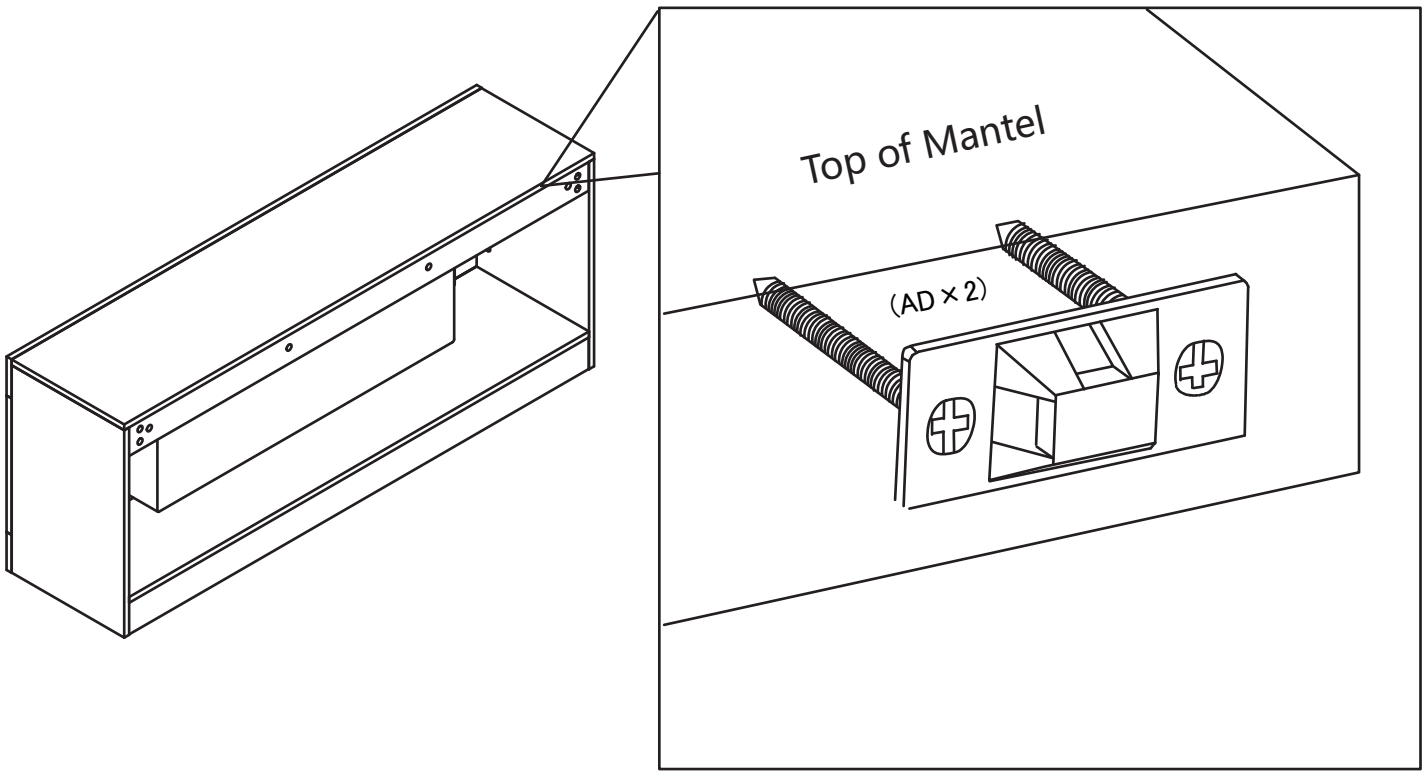

STEP-02

Drill holes at the same height on the wall. Fix the second bracket (AA) with anchors (AB) and screws (AE).

AA X1
AB X2
AE X2

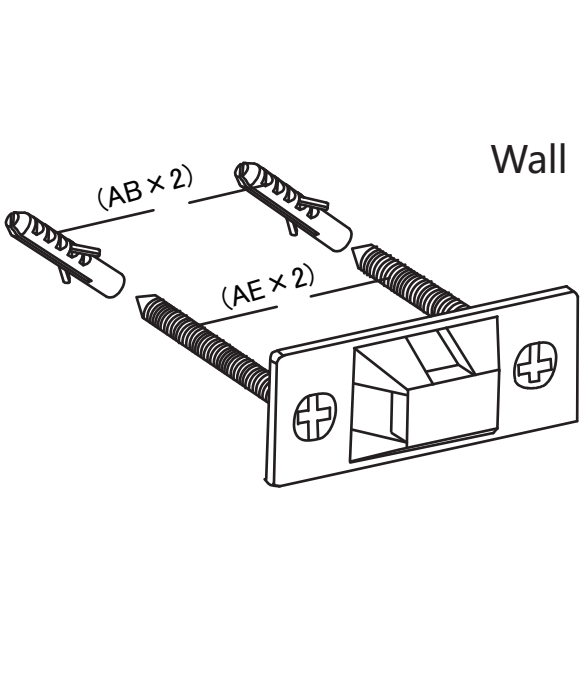

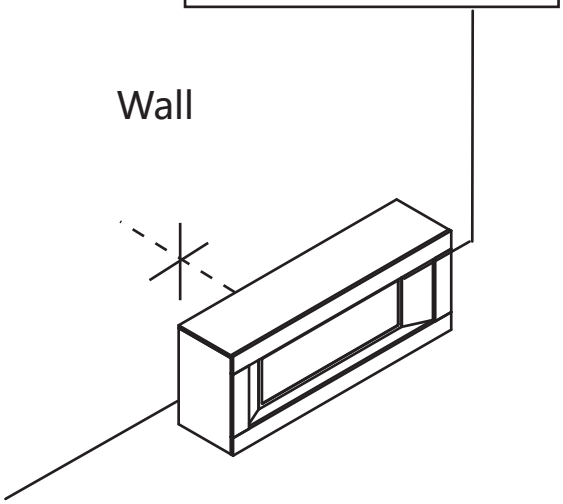

Determine the fireplace location before drilling.

STEP-03

Thread the nylon strap (AC) through both brackets (AA) and tighten.

AC X1

