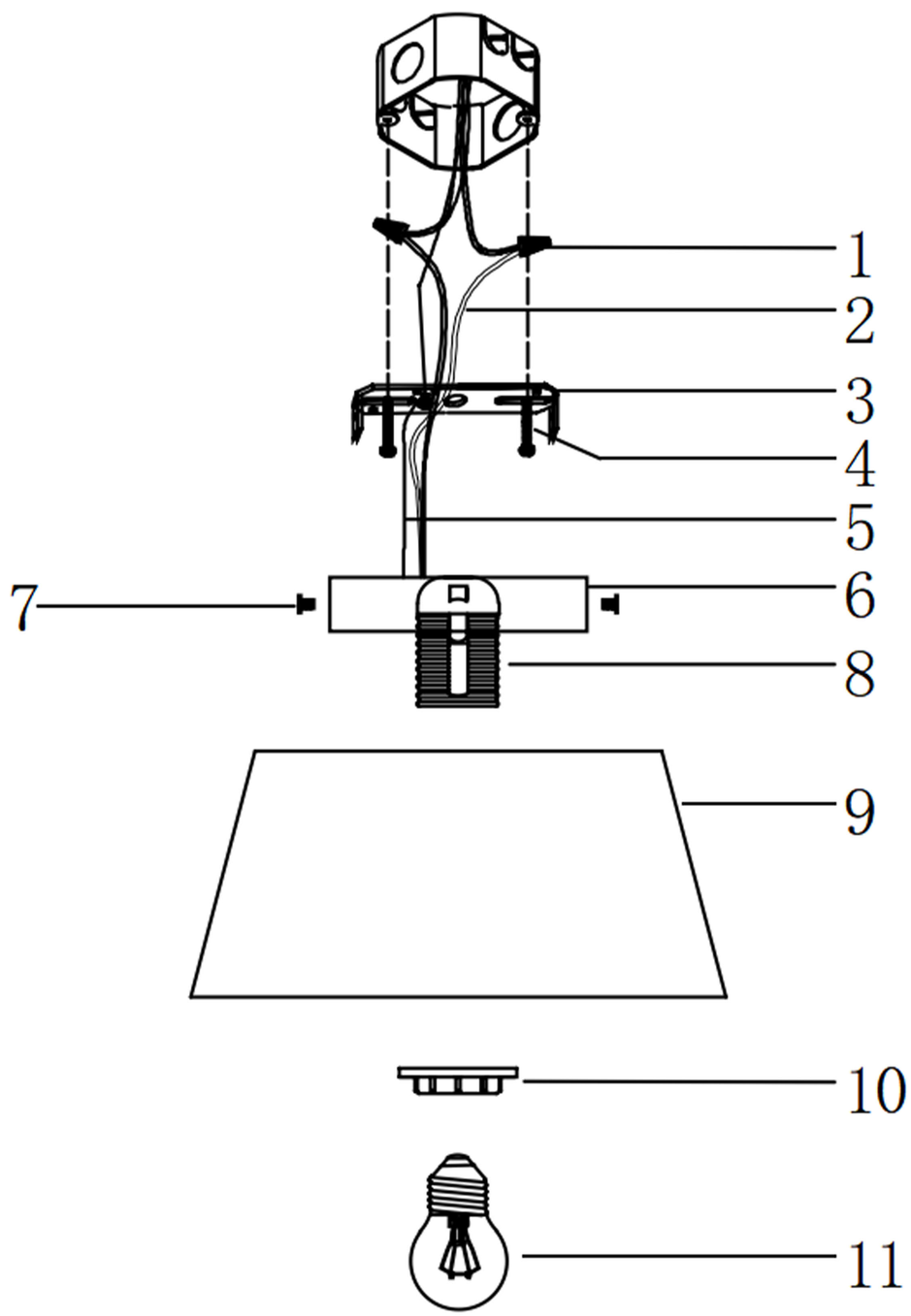

Installation Steps：

Step 1: Fix the mounting plate(3) to the junction box with screws (4).
Step 2: Connect the power cable (2) to the external power cable with the wiring cap (1) and the ground cable (5) with the green screw.
Step 3: Fix the straight-sided basin (6) to the mounting plate(3) with the screw (7)
Step 4: Lock the lampshade (9) to the lamp head (8) with the lamp holder ring (10).
Step 5: Fit the bulb (not included) (11) to the lamp head (8).

Accessories：

Part 3：Mounting Plate*1	
Part 4：Mounting Screw*2	
Part 7：Mounting Screw*2	
Part 1：Wiring cap*2	
Part 10：Lampholder ring*1	

Notice： This light fixture should be installed in accordance with all applicable, local installation codes, and by a person familiar with the construction and operation of it, as well as the hazards involved. Inspect items and contents carefully. If any damage or defect is found, do not install it.