Storage Cabinet

Assembly Instructions - Please keep for future reference

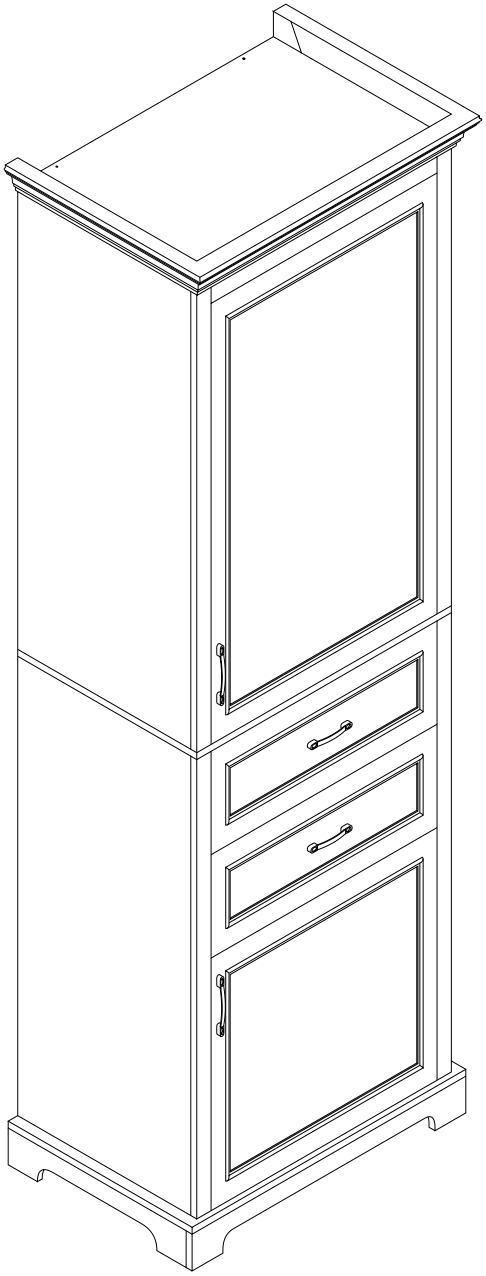

⚠ WARNING	
CSU	This product is NOT a Clothing Storage Unit (CSU). DO NOT use it for clothing storage. Improper use may cause furniture tipover.

Important – Please read these instructions fully before starting assembly

Safety and Care Advice

Important – Please read these instructions fully before starting assembly

• Check you have all the components and tools listed on the following pages.

• Remove all fittings from the plastic bags and separate them into their groups.

• Keep children and animals away from the work area, small parts could choke if swallowed.

• Make sure you have enough space to layout the parts before starting.

• During assembly do not stand or put weight on the product, this could cause damage.

• Assemble the item as close to its final position (in the same room) as possible.

• Assemble on a soft level surface to avoid damaging the unit or your floor.

• Parts of the assembly will be easier with 2 people.



• To reduce the likelihood of damaging your product please ensure that your power drill is set on a low torque setting.

Care and maintenance

• Only clean using a damp cloth and mild detergent, do no use bleach or abrasive cleaners.

• From time to time check that there are no loose screws on this unit.

• This product should not be discarded with household waste. Take to your local authority waste disposal centre.

Handy Hints

• Assemble all parts and bolts loosely during assembly, only once the product is complete should you fully tighten the bolts

• Regularly check and ensure That all bolts and fittings are tightened properly.

WARNING
In order to help prevent overturning – please follow these instructions

To help prevent product toppling over please follow the below steps:-

Use the anti tip stap or wall fixing method provided (if applicable)
Do not allow children to climb or hang on the furniture
Do not open more than one drawer at a time
Do not place heavy items in the top drawers
Do not place heavy items on top of the furniture, unless the furniture has been designed for this purpose

Using Camlocks

Step 1

Connect the male camlock as diected in the assembly instructions using a scewdriver.

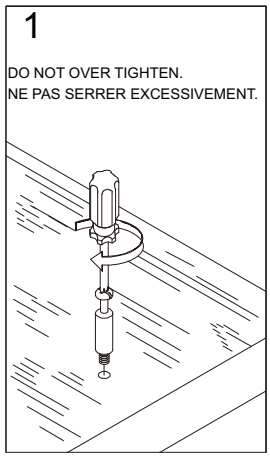

Step 2

Push the male camlock into the entry hole.

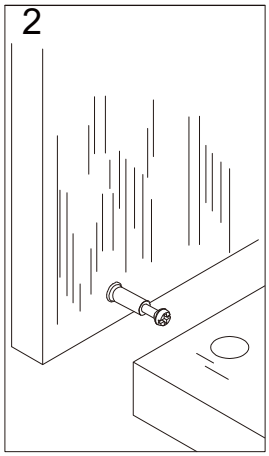

Step 3

Insert the female camlock as shown in the instruction.

Note：ensure that the arrow on the top of the camlock points towards the entry hole for the male camlock.

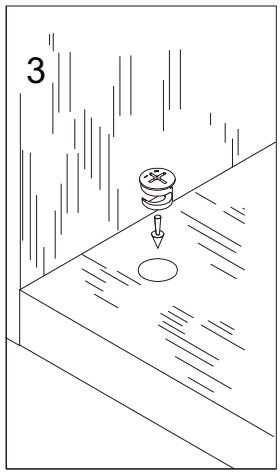

Step 4

Turn the female camlock clockwise with a screwdriver.

You should feel a click when the camlock is locked in place.

The joint is now secure.

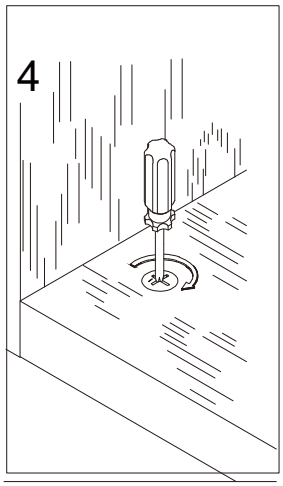

Assembly Instruction

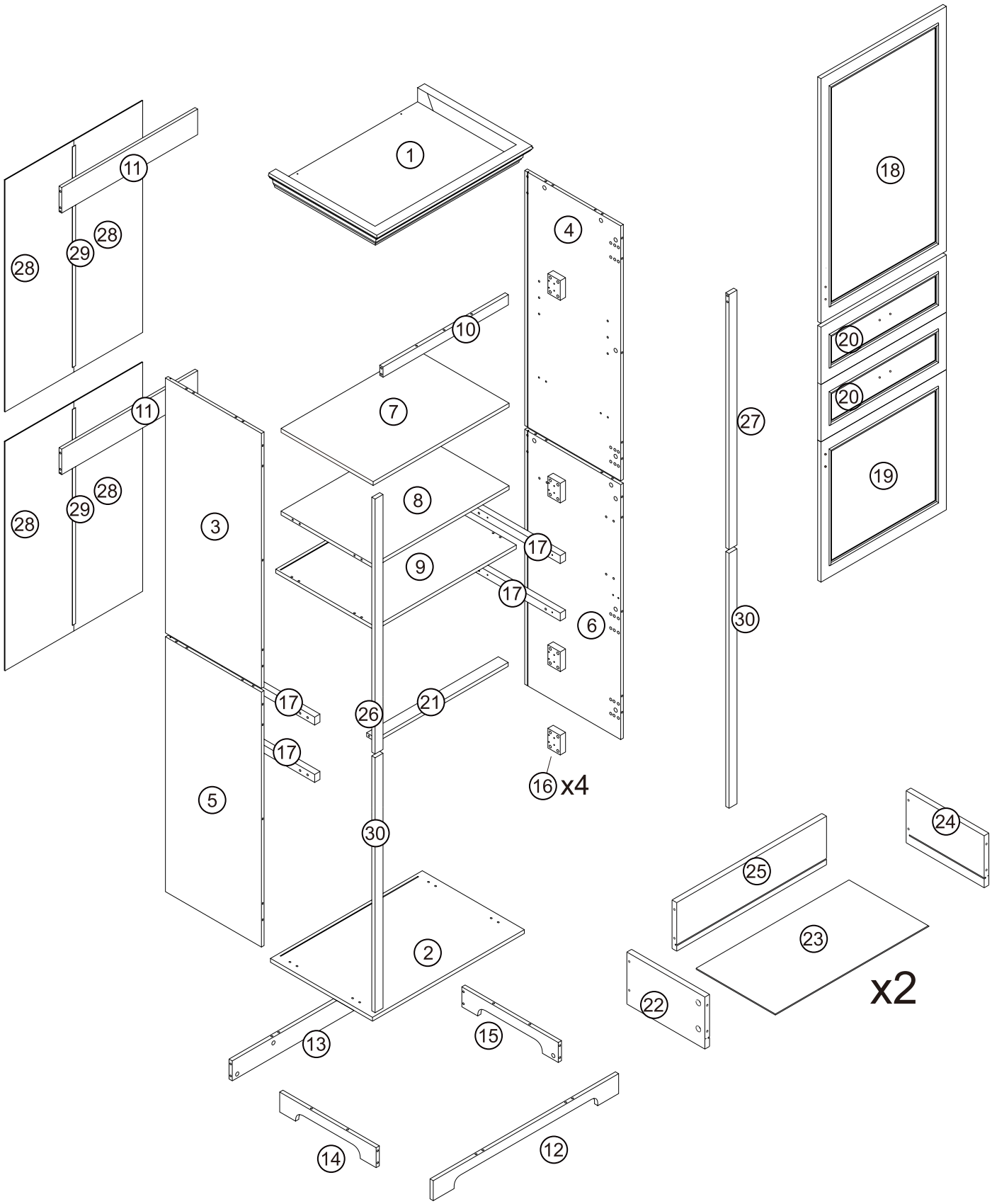

1 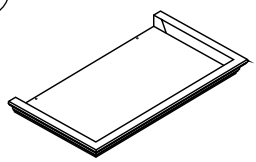 1PC	2 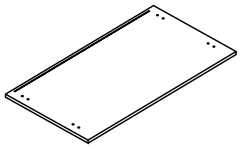 1PC	3 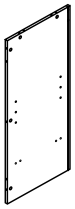 1PC
4  1PC	5 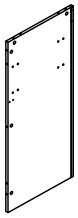 1PC	6  1PC
7 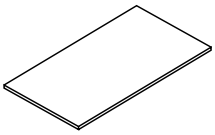 1PC	8 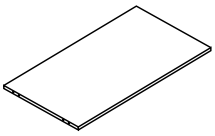 1PC	9 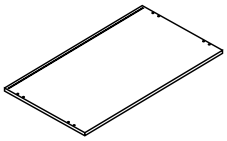 1PC
10 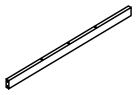 1PC	11 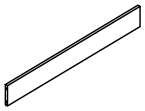 2PCS	12 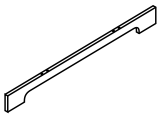 1PC
13 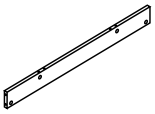 1PC	14  1PC	15  1PC
16  4PCS	17 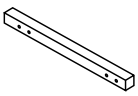 4PCS	18 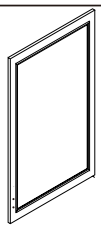 1PC
19 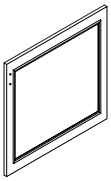 1PC	20 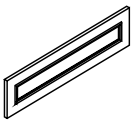 2PCS	21 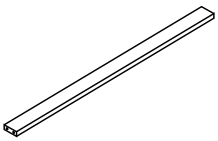 1PC

22 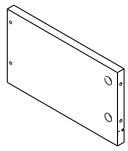 2PCS	23 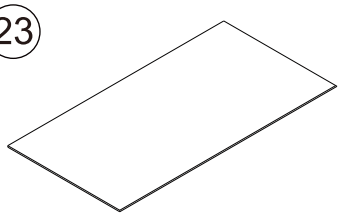 2PCS	24 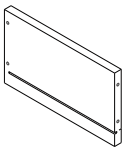 2PCS
25 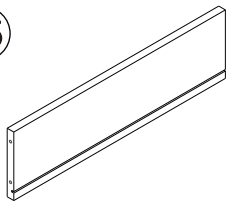 2PCS	26  1PC	27  1PC
28 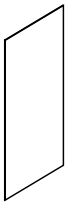 4PCS	29 2PCS	30  2PCS

Components - Fittings

Please check you have all the panels listed below

Note:The quantities below are the correct amount to complete the assembly. In some cases, more fittings may be supplied than required.

A 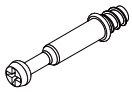 Cam Bolt x 48	B 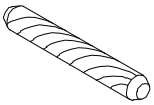 6*30mm Dowel x 49	C  Cam lock x 48	E  6*50mm Dowel x 4
F 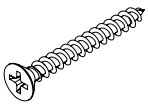 5*40mm Screw x 10	G  4*20mm Handle x 2SET	H  3*12mm Screw x 24	I 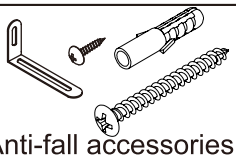 Anti-fall accessories x2
J  Shelf support pin x 4	K 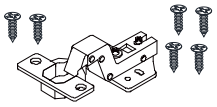 4*14mm Straight bend hinge x 4set	L  4*10mm Handle x 2SET	M 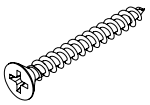 4*30mm Screw x 36
CR 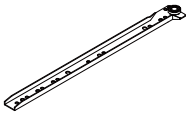 300mm runner x 2	DR 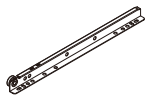 300mm runner x 2	DL 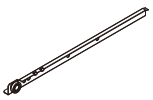 300mm runner x 2	CL 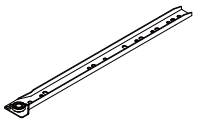 300mm runner x 2
N 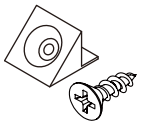 3x16mm screw x 8	O  x 8		

Step 1

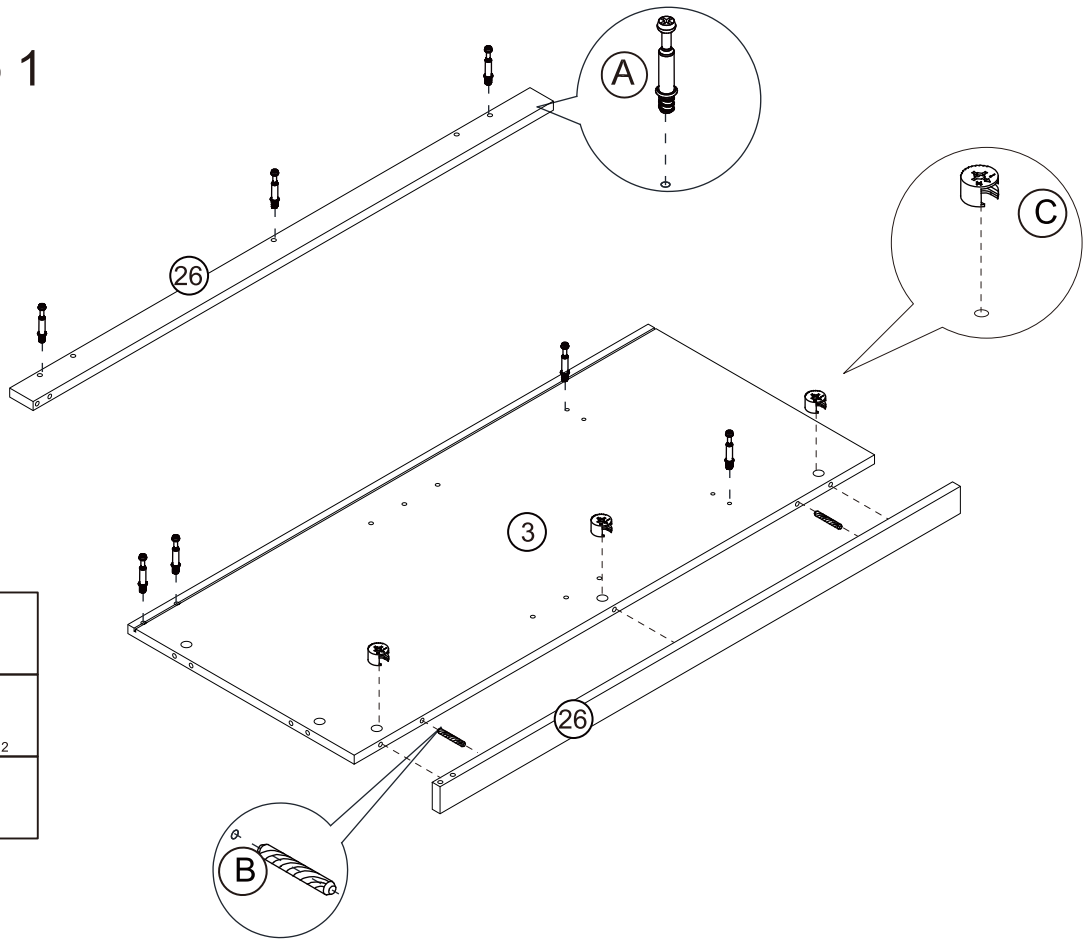

- A — Cam Bolt x 7
- B — 6*30mm Dowel x 2
- C — Cam lock x 3

Step 2

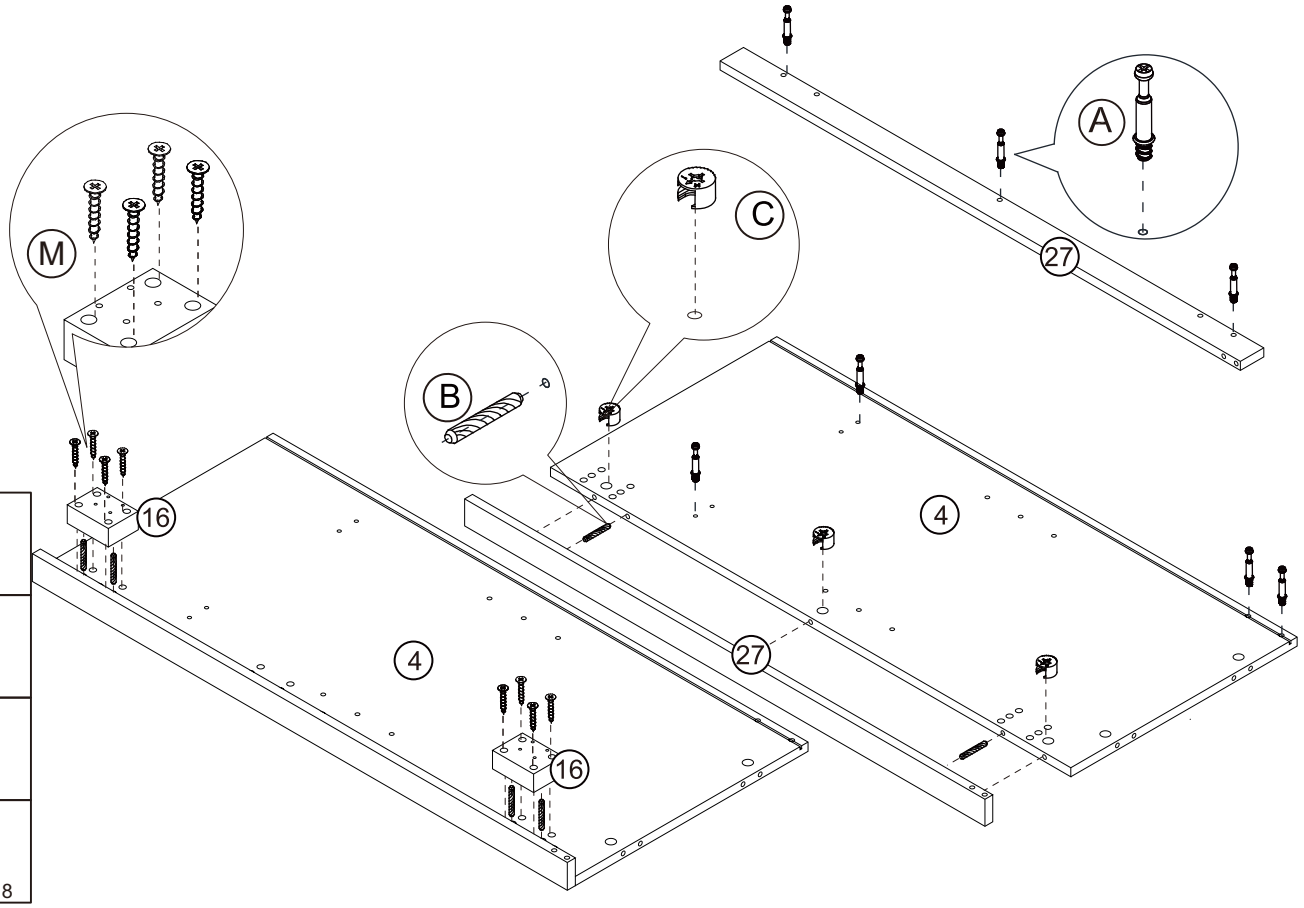

- A — Cam Bolt x 7
- B — 6*30mm Dowel x 6
- C — Cam lock x 3
- M — 4*30mm Screw x 8

Step 3

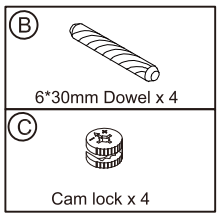
B
6*30mm Dowel x 4
C
Cam lock x 4

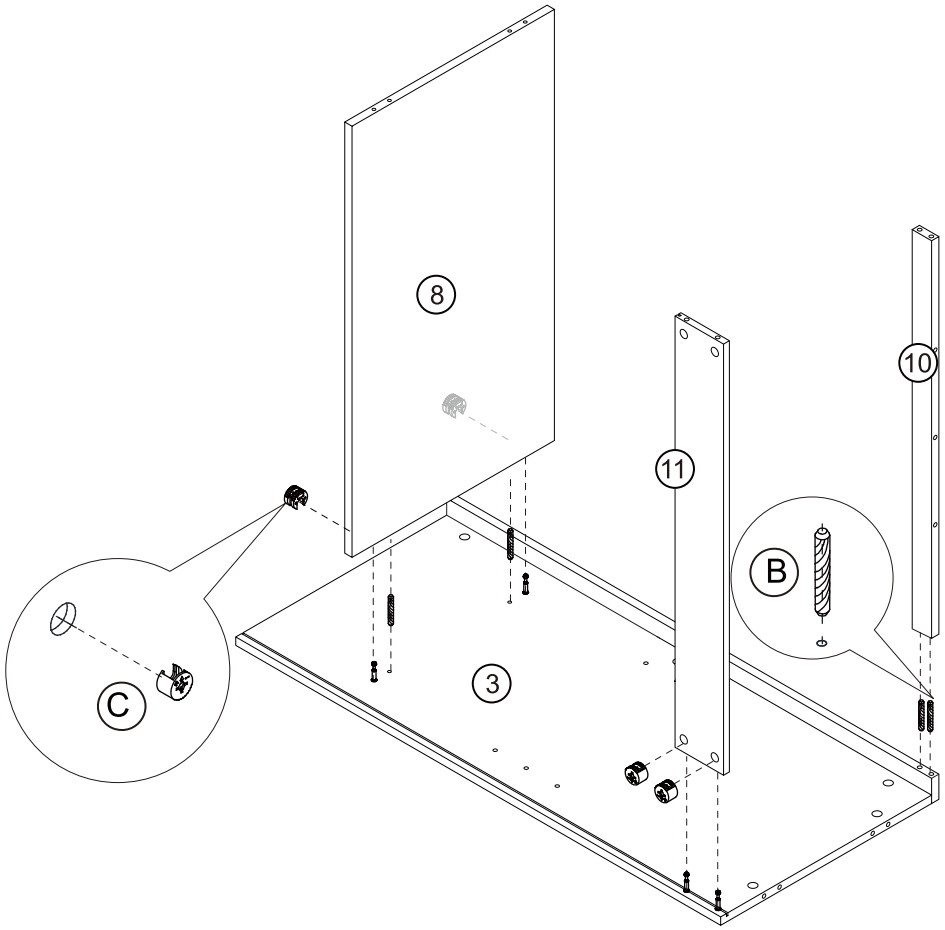
8
10
11
B
C
3

Step 4

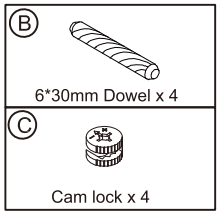
B
6*30mm Dowel x 4
C
Cam lock x 4

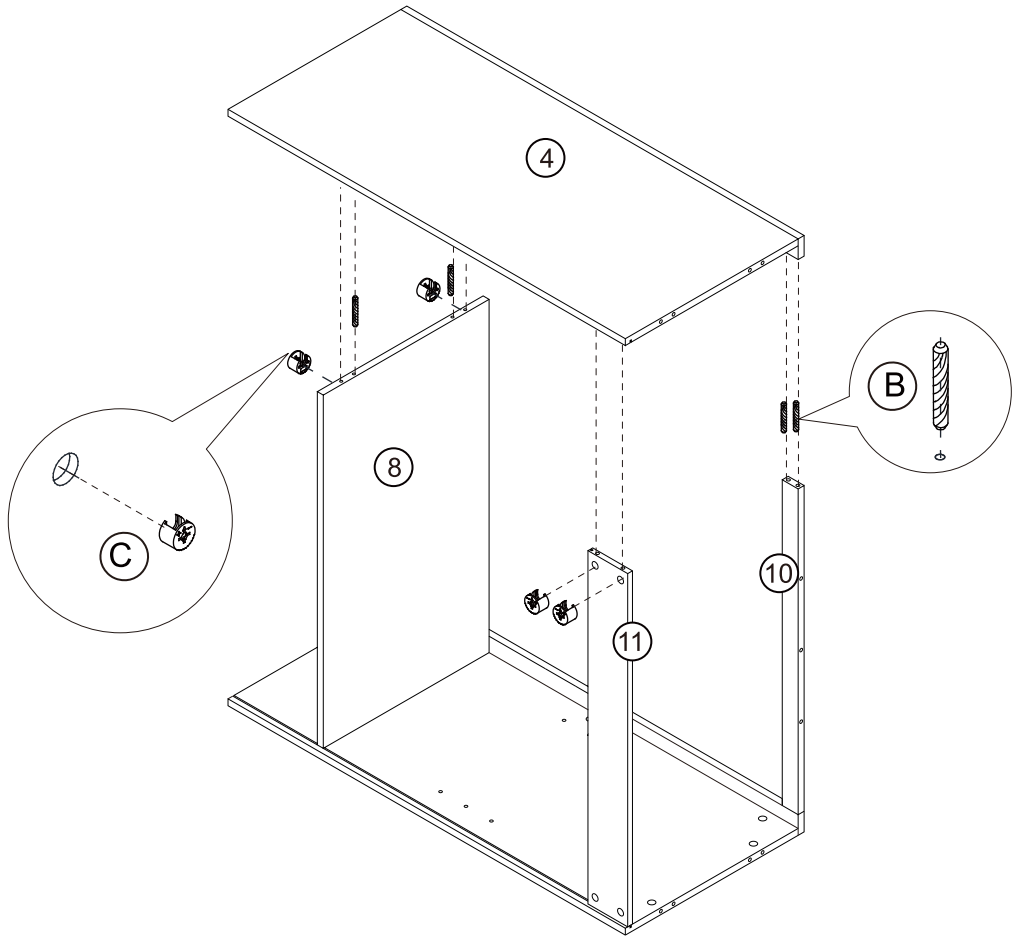
4
8
B
C
10
11

Step 5

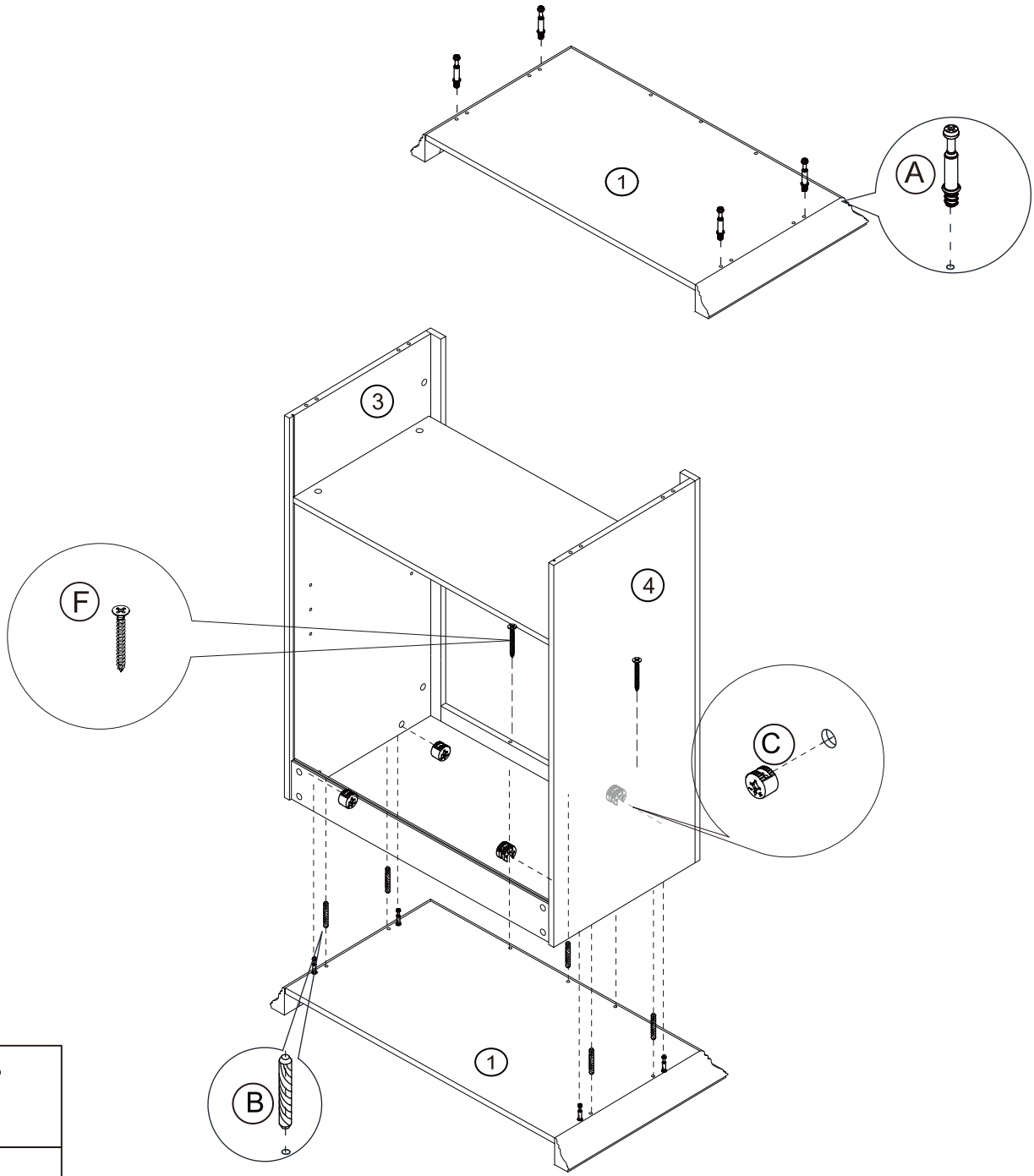

A	Cam Bolt x4
B	6*30mm Dowel x 5
C	Cam lock x 4
F	5*40mm Screw x 2

Step 6

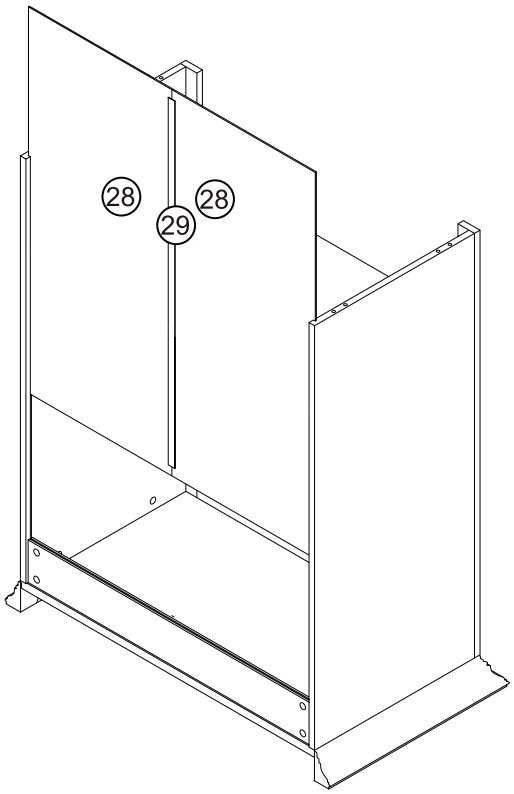

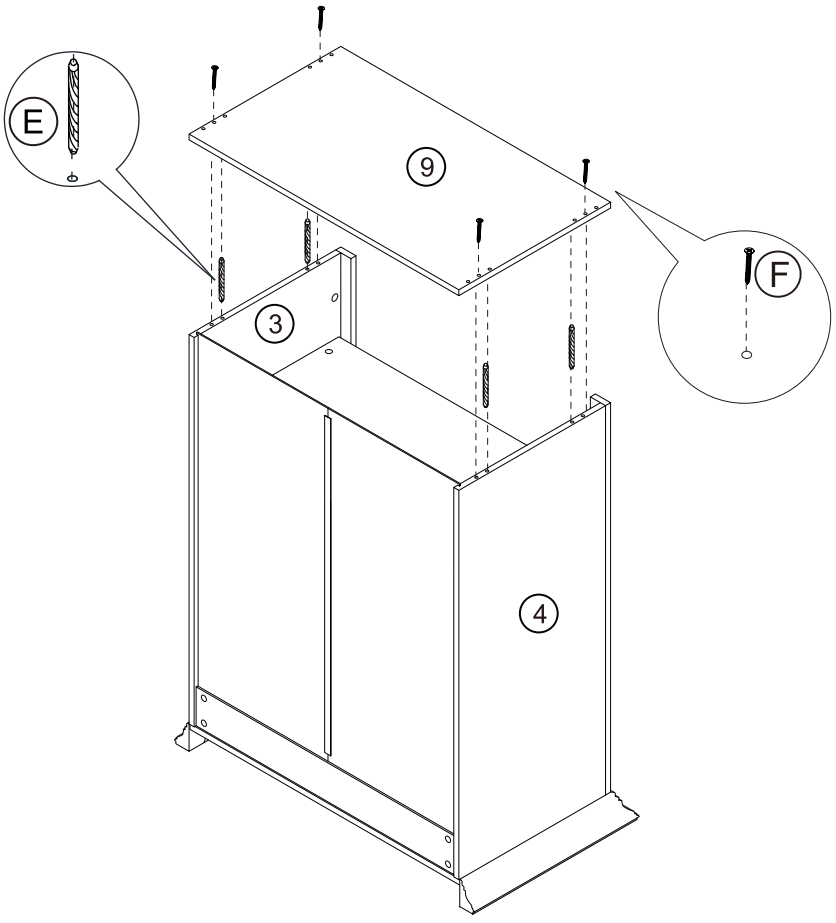

Ⓕ

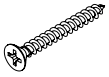

5*40mm Screw x 4

Ⓔ



6*50mm Dowel x 4

Step 7

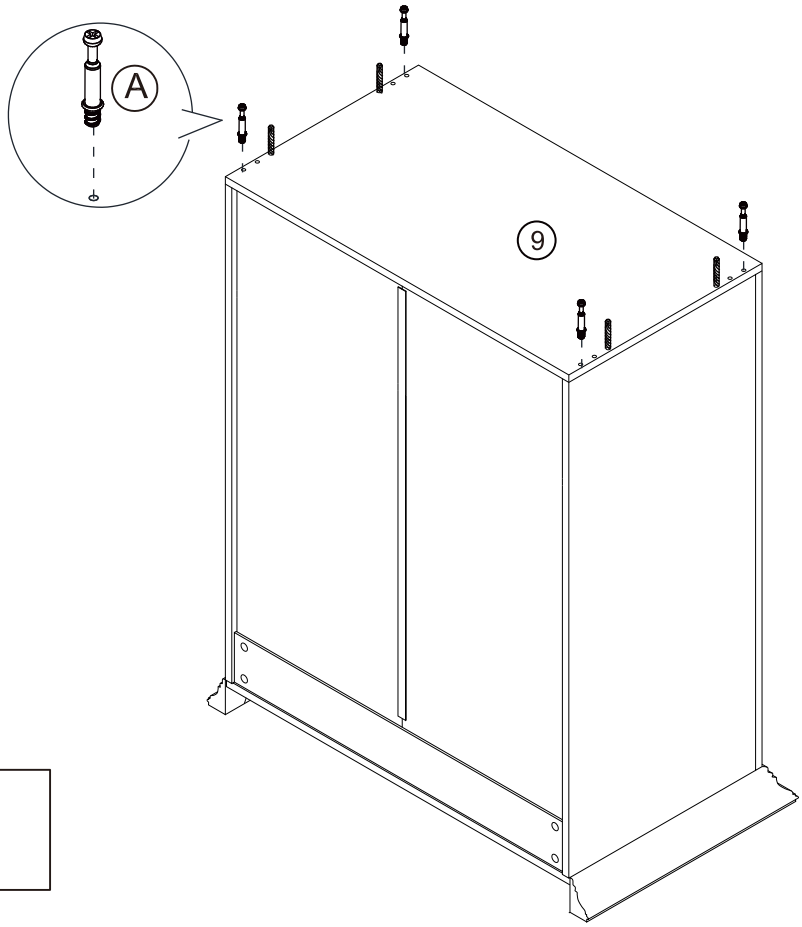

A

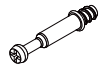

Cam Bolt x4

Step 8

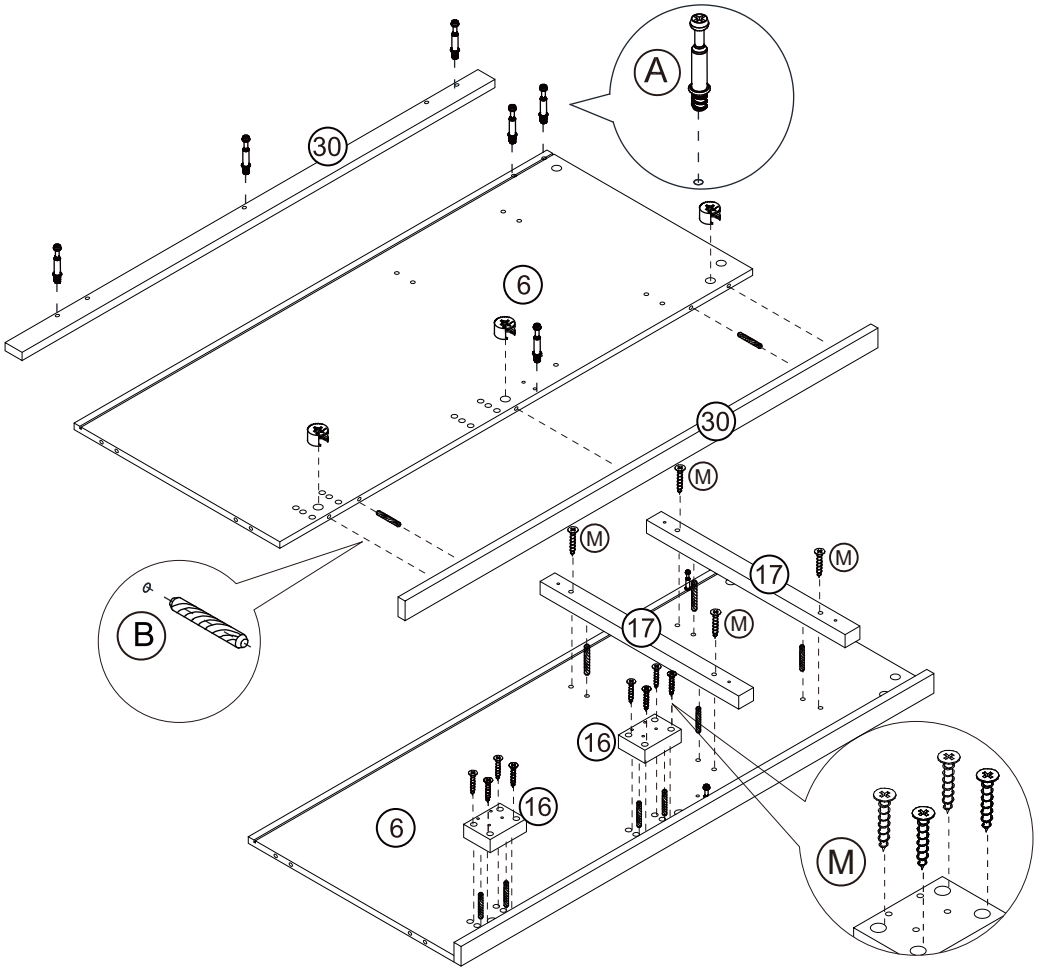

A



Cam Bolt x 6

B



6*30mm Dowel x 10

C



Cam lock x 3

M



4*30mm Screw x 12

Step 9

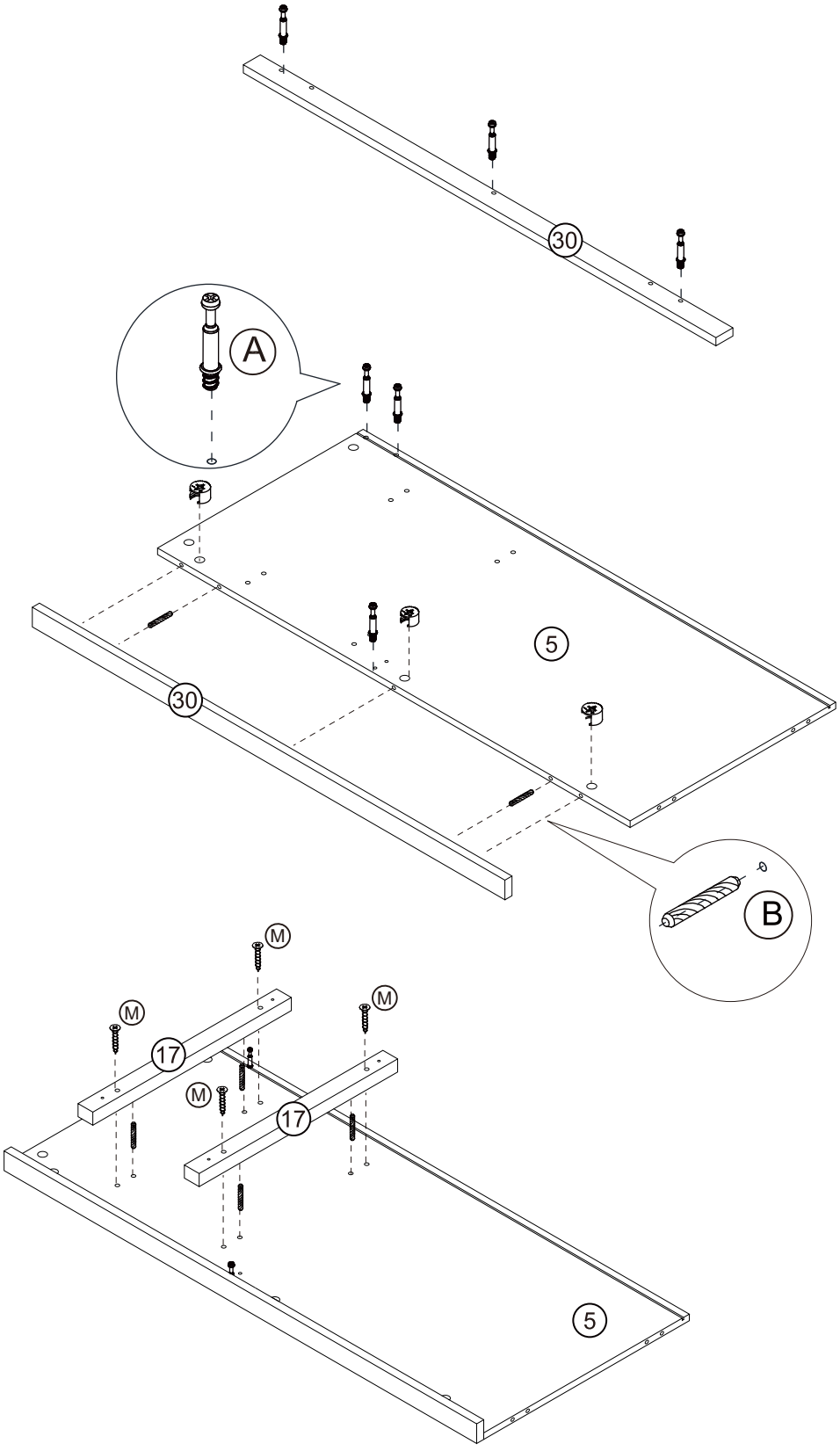

A	Cam Bolt x 6
B	6*30mm Dowel x 4
C	Cam lock x 3
M	4*30mm Screw x 4

Step 10

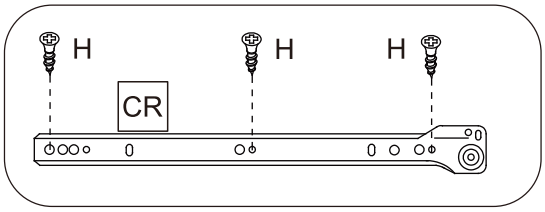

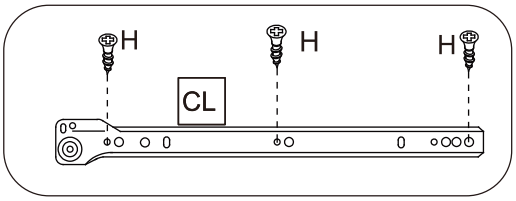

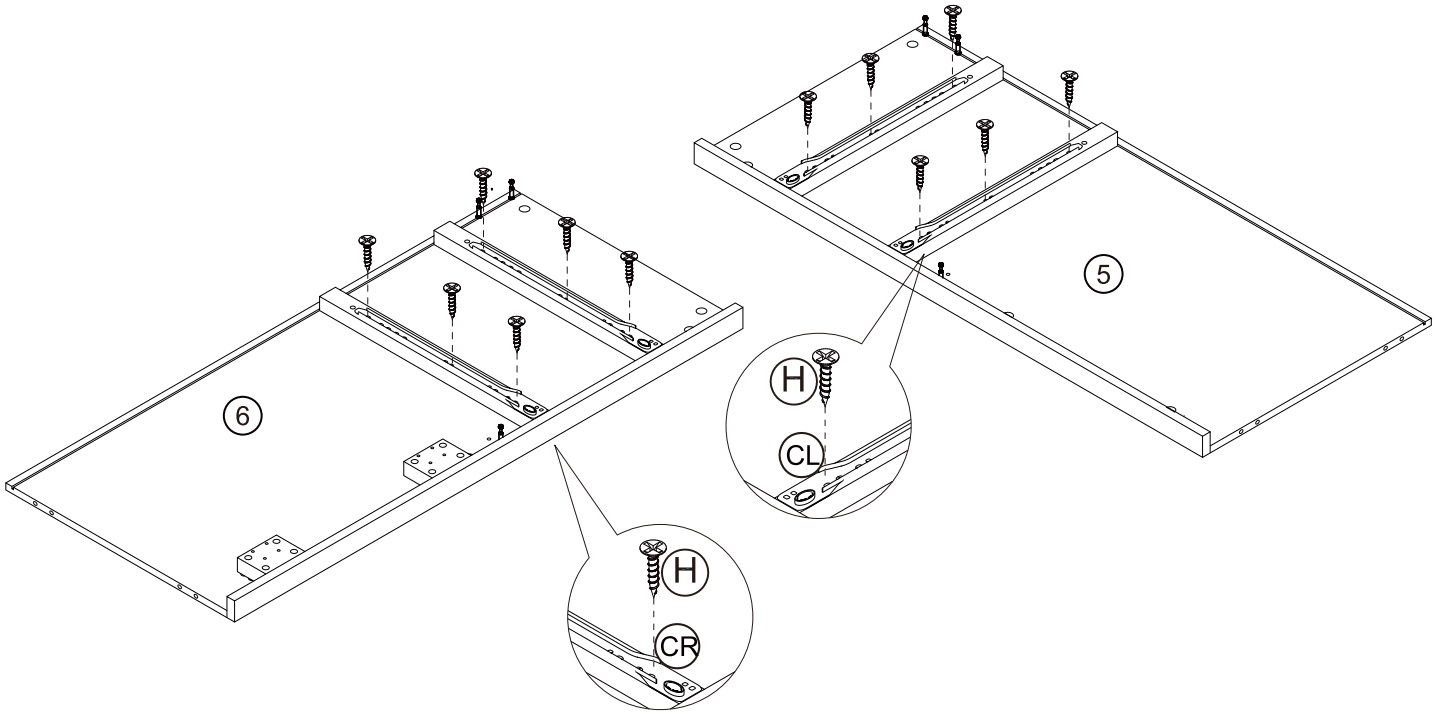

H	3*12mm Screw x 12
CR	300mm runner x 2
CR	300mm runner x 2
B	6*30mm Dowel x 1
C	Cam lock x 3

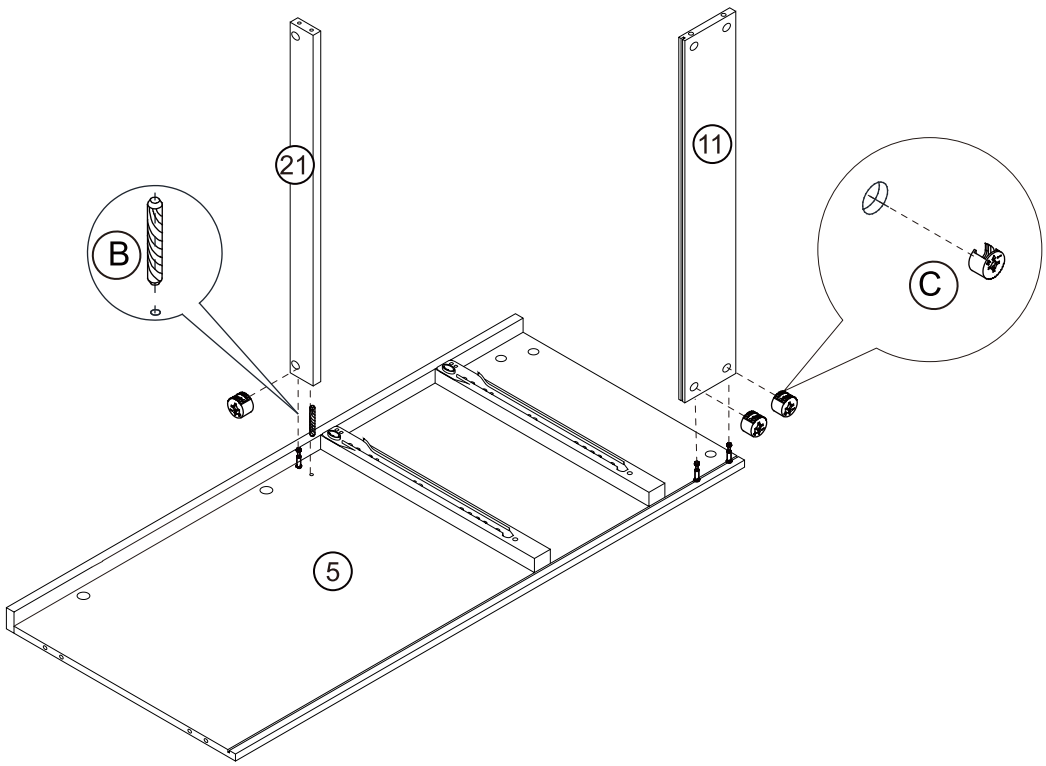

Step 11

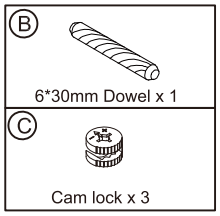

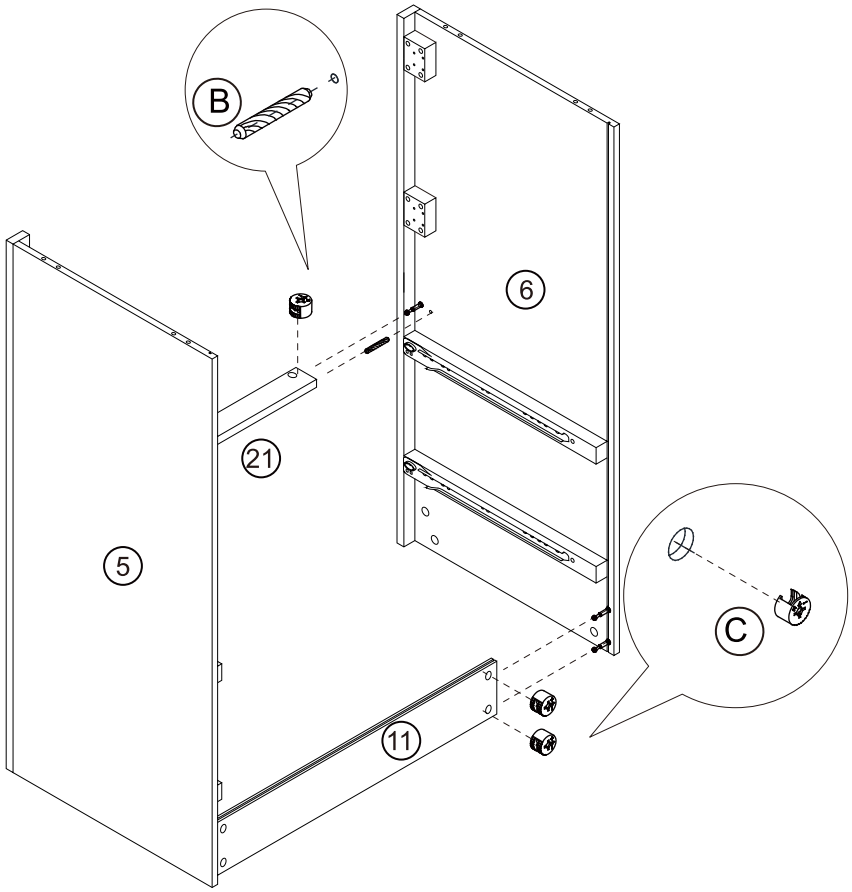

Step 12

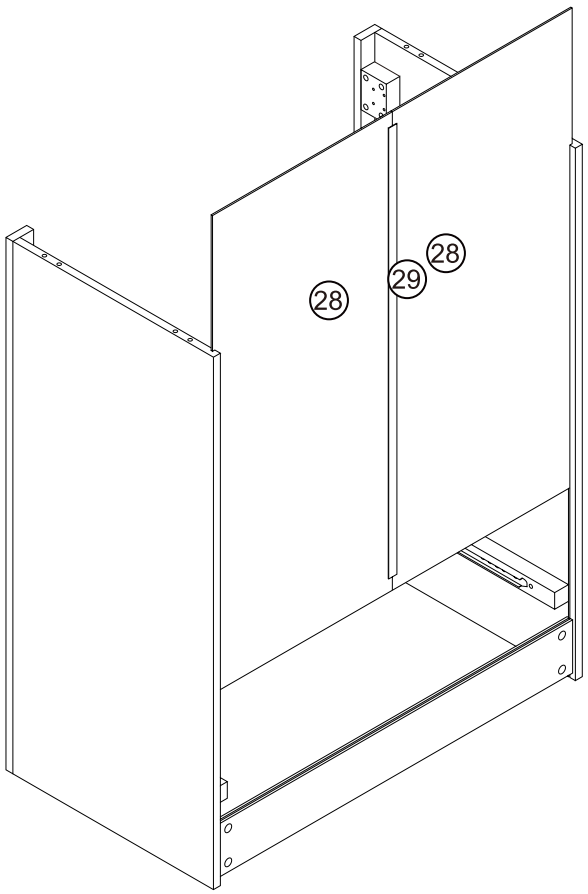

Step 13

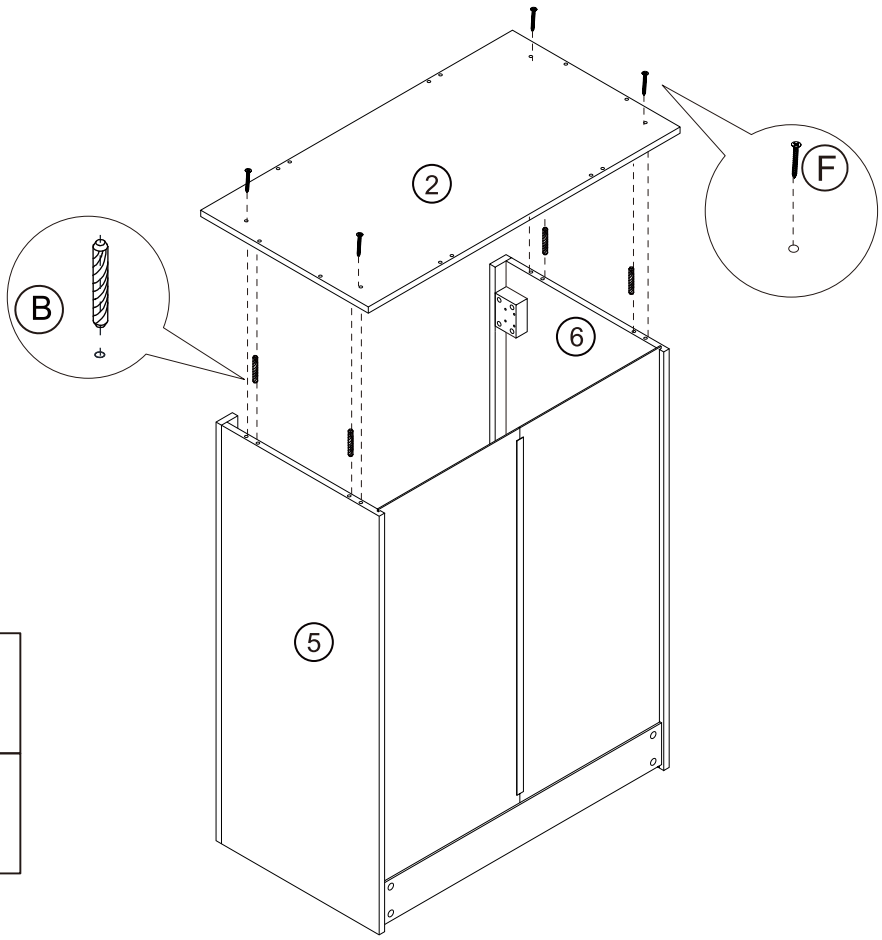

F

5*40mm Screw x 4

B

6*30mm Dowel x 4

Step 14

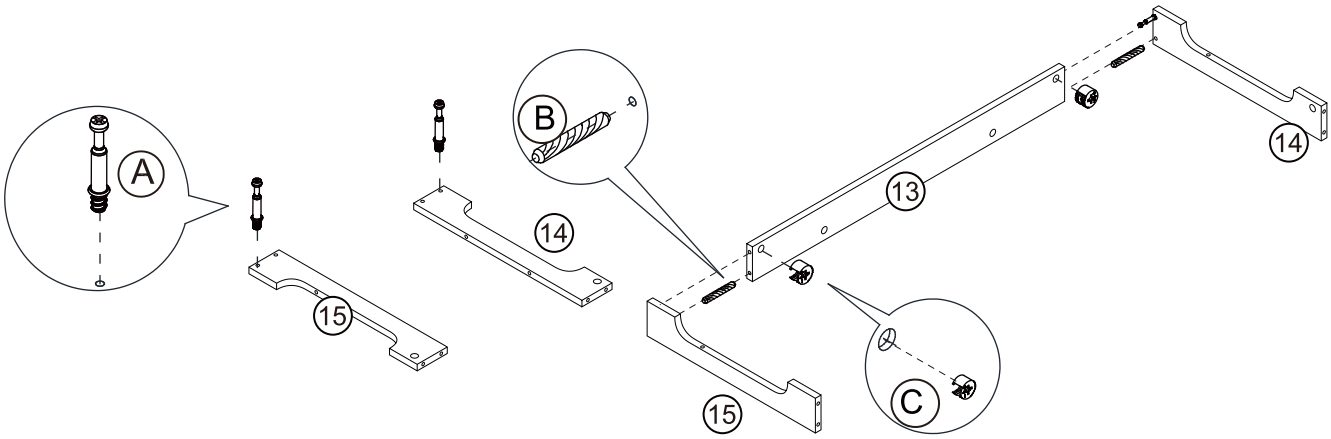

A

Cam Bolt x4

B

6*30mm Dowel x 4

C

Cam lock x 4

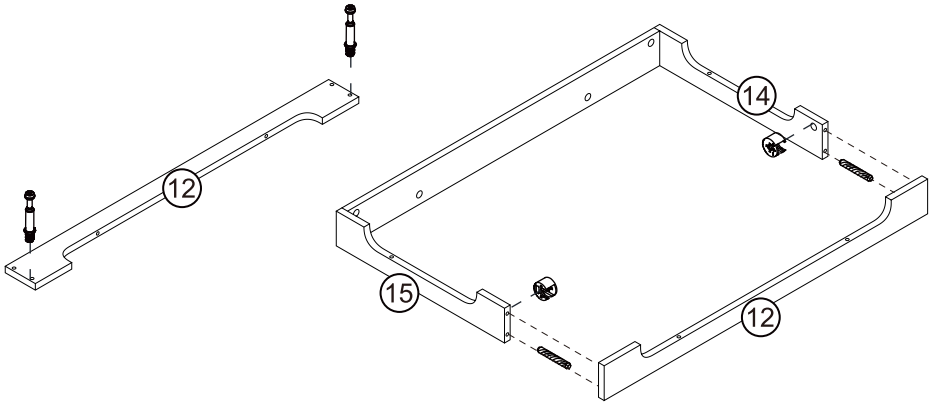

Step 15

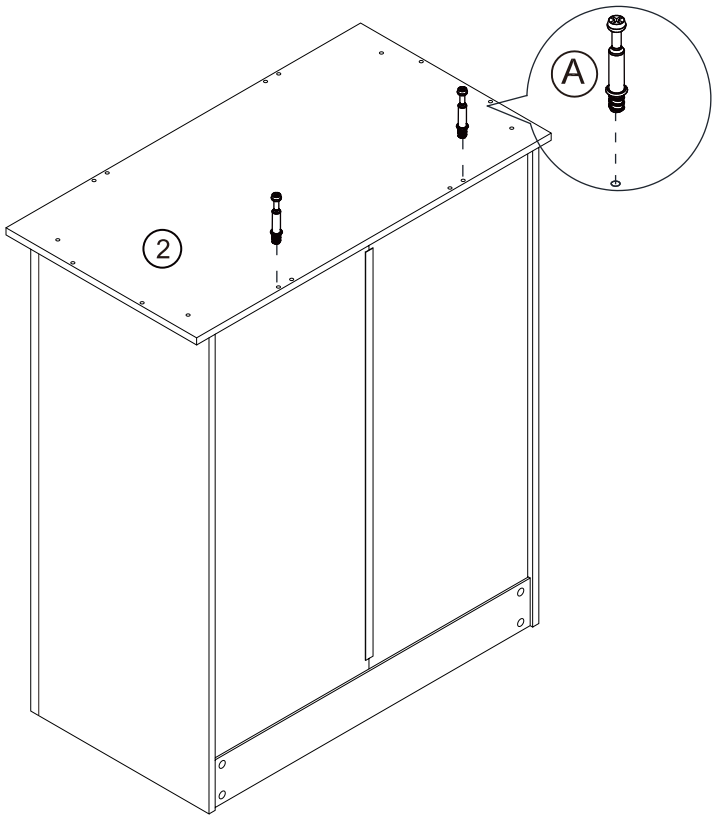

Ⓐ



Cam Bolt x2

Step 16

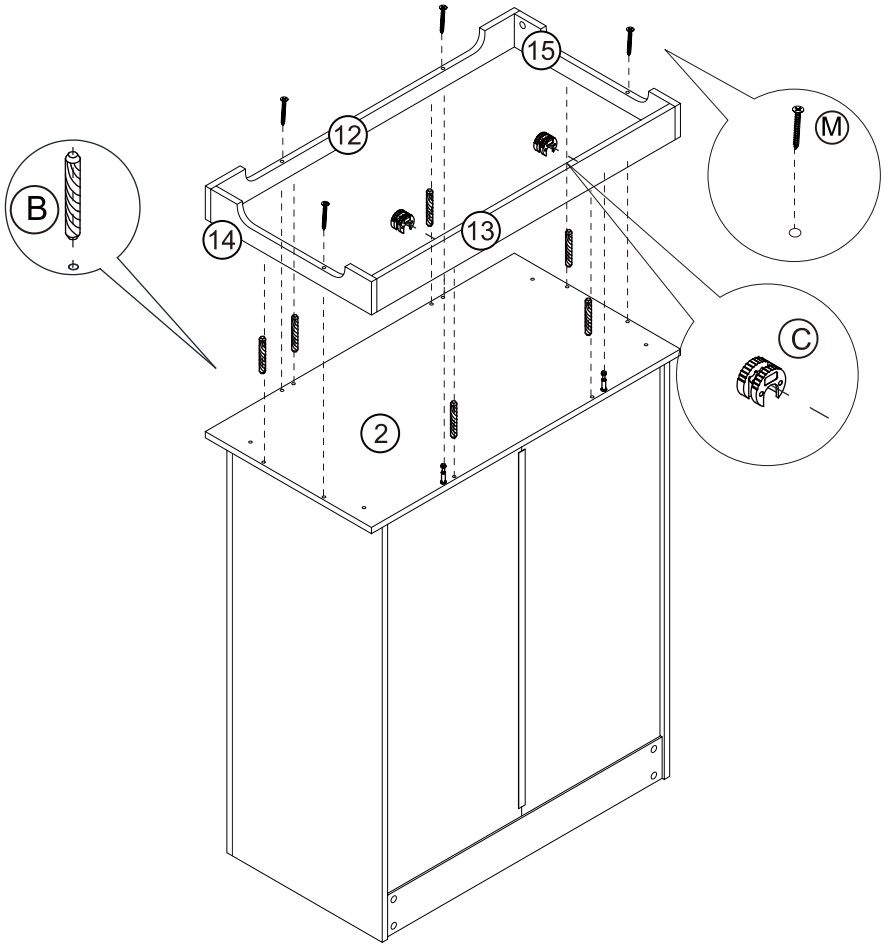

Ⓑ

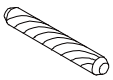

6*30mm Dowel x 6

Ⓒ



Cam lock x 2

Ⓜ

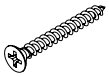

4*30mm Screw x 4

Step 17

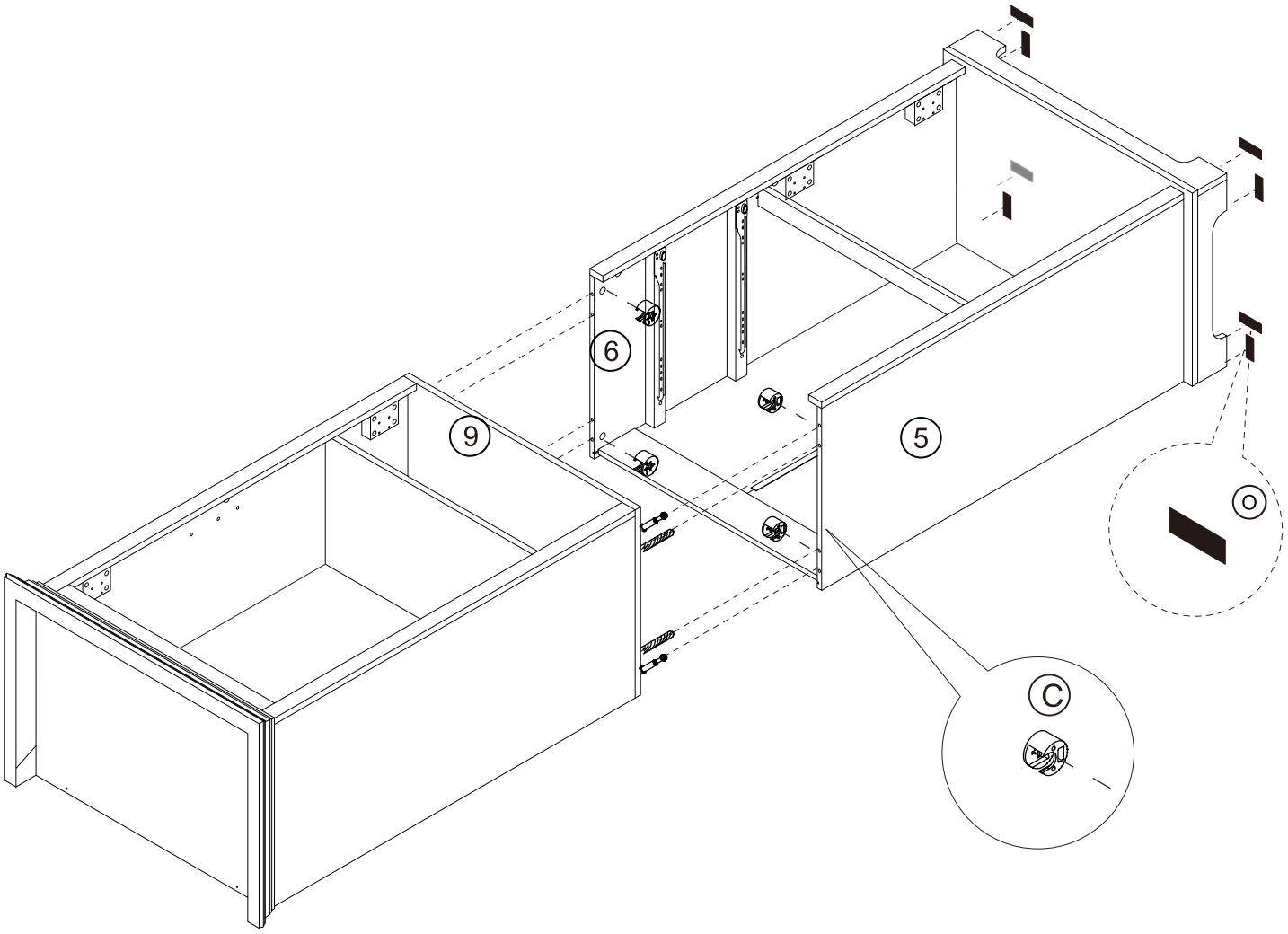

O	x 8
C	Cam lock x 4

Step 18

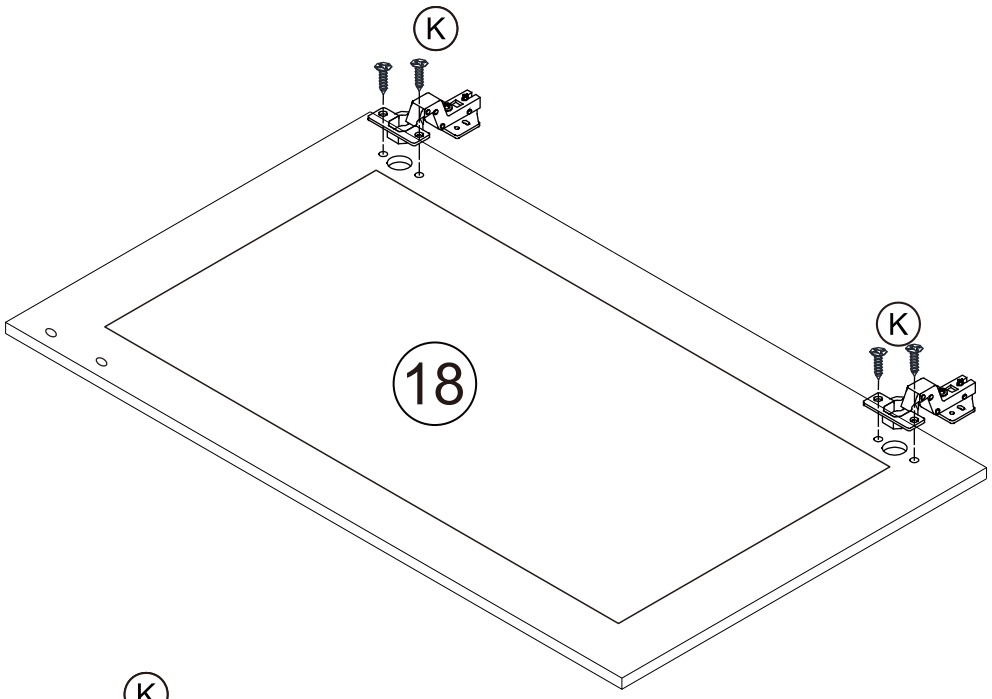

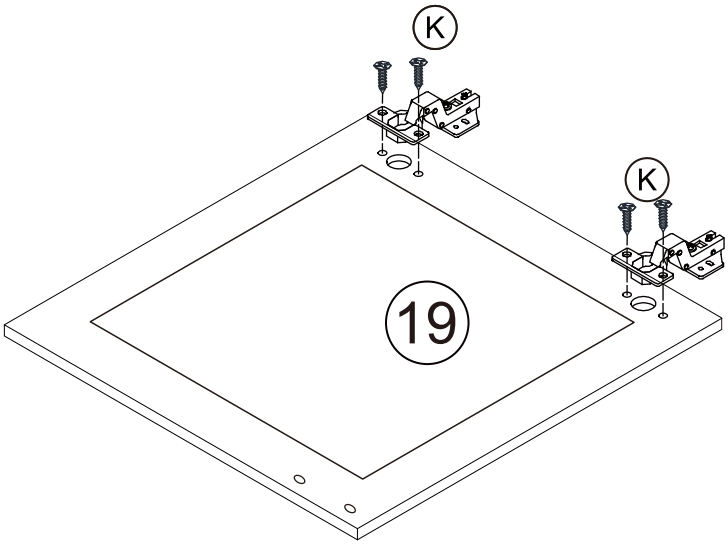

K

4*14mm Straight bend hinge
x 4set

Step 19

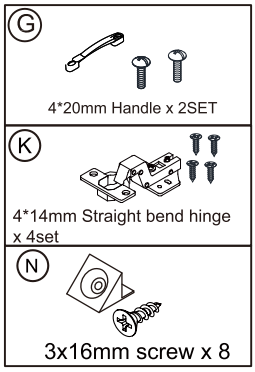

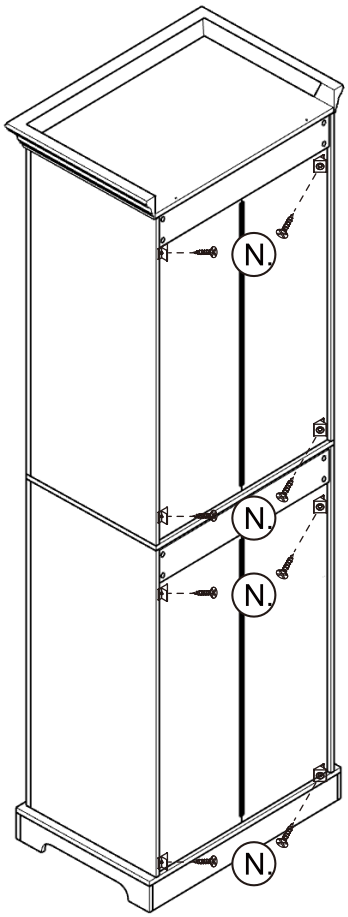

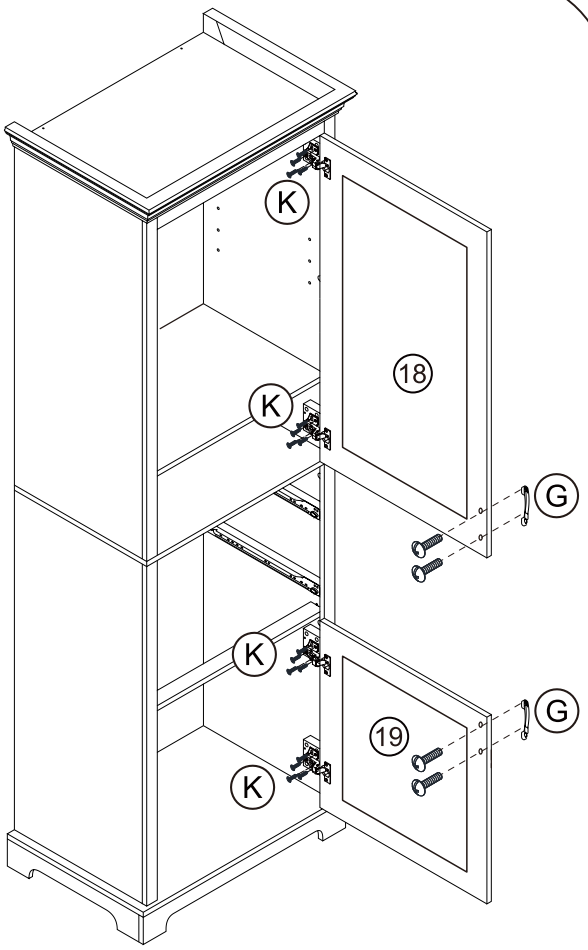

Step 20

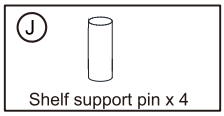

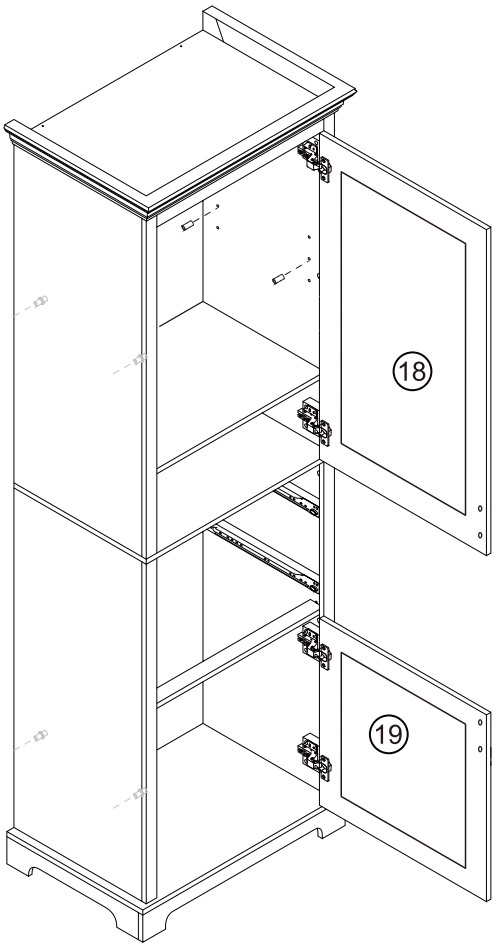

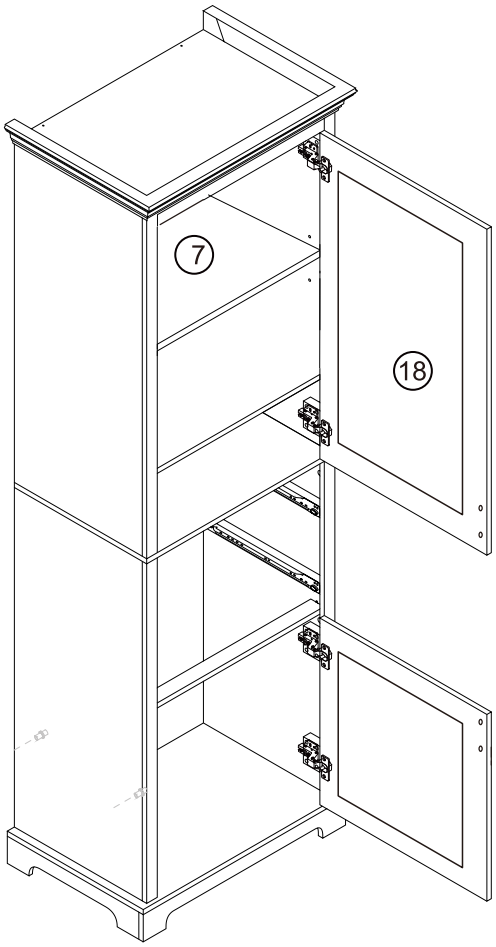

Step 21

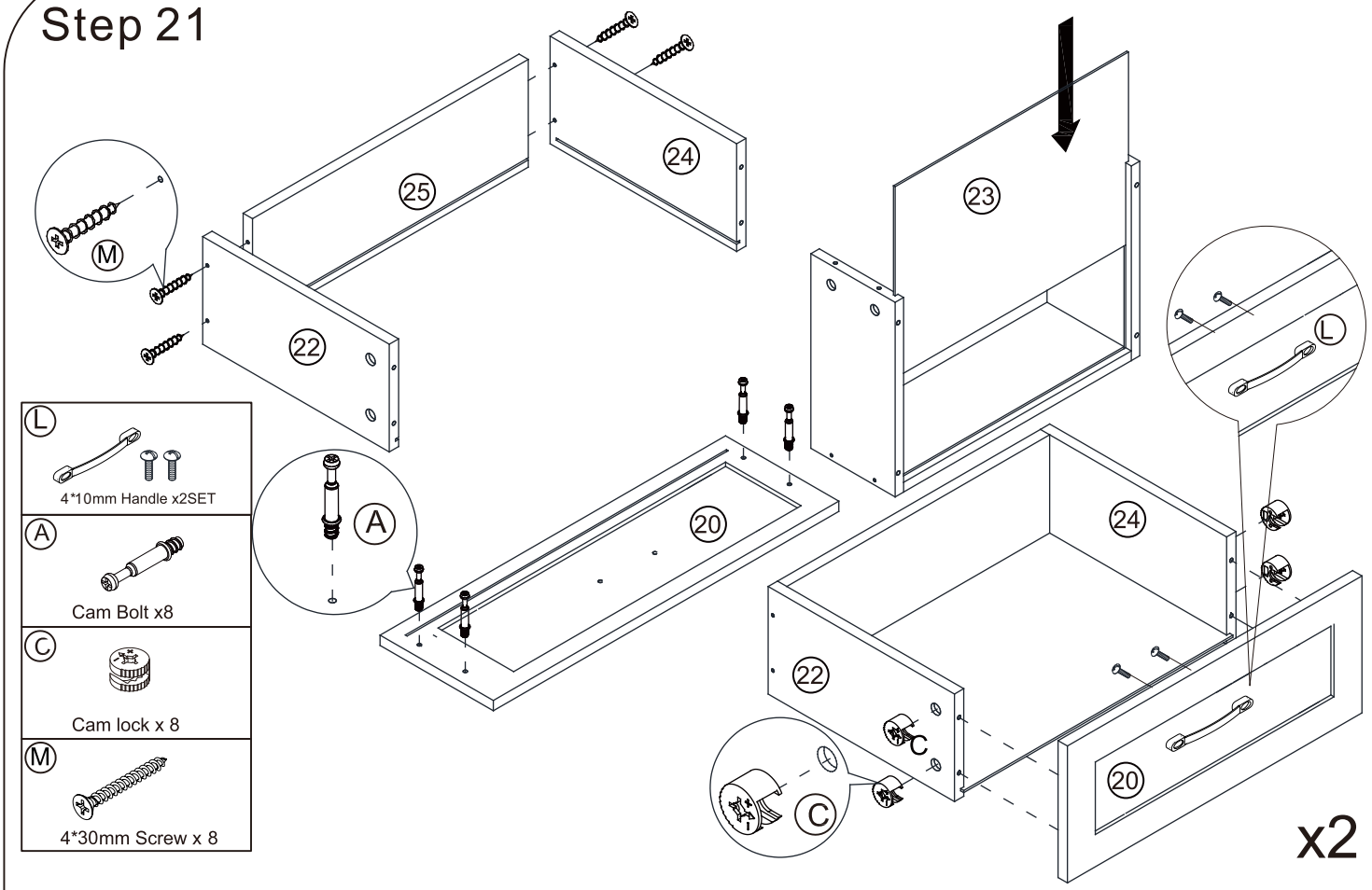

L	4*10mm Handle x2SET
A	Cam Bolt x8
C	Cam lock x 8
M	4*30mm Screw x 8

Step 22

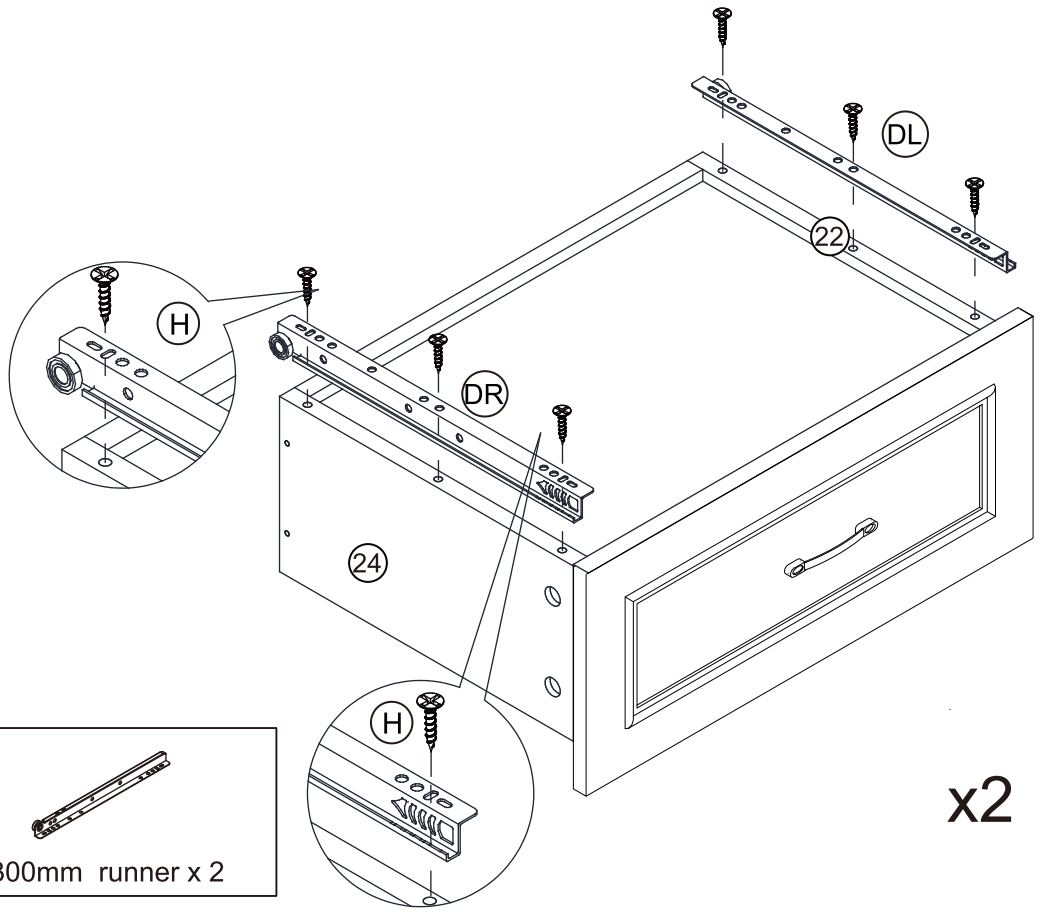

H		
3*12mm Screw x 12		
DL	DR	
300mm runner x 2	300mm runner x 2	

Step 23

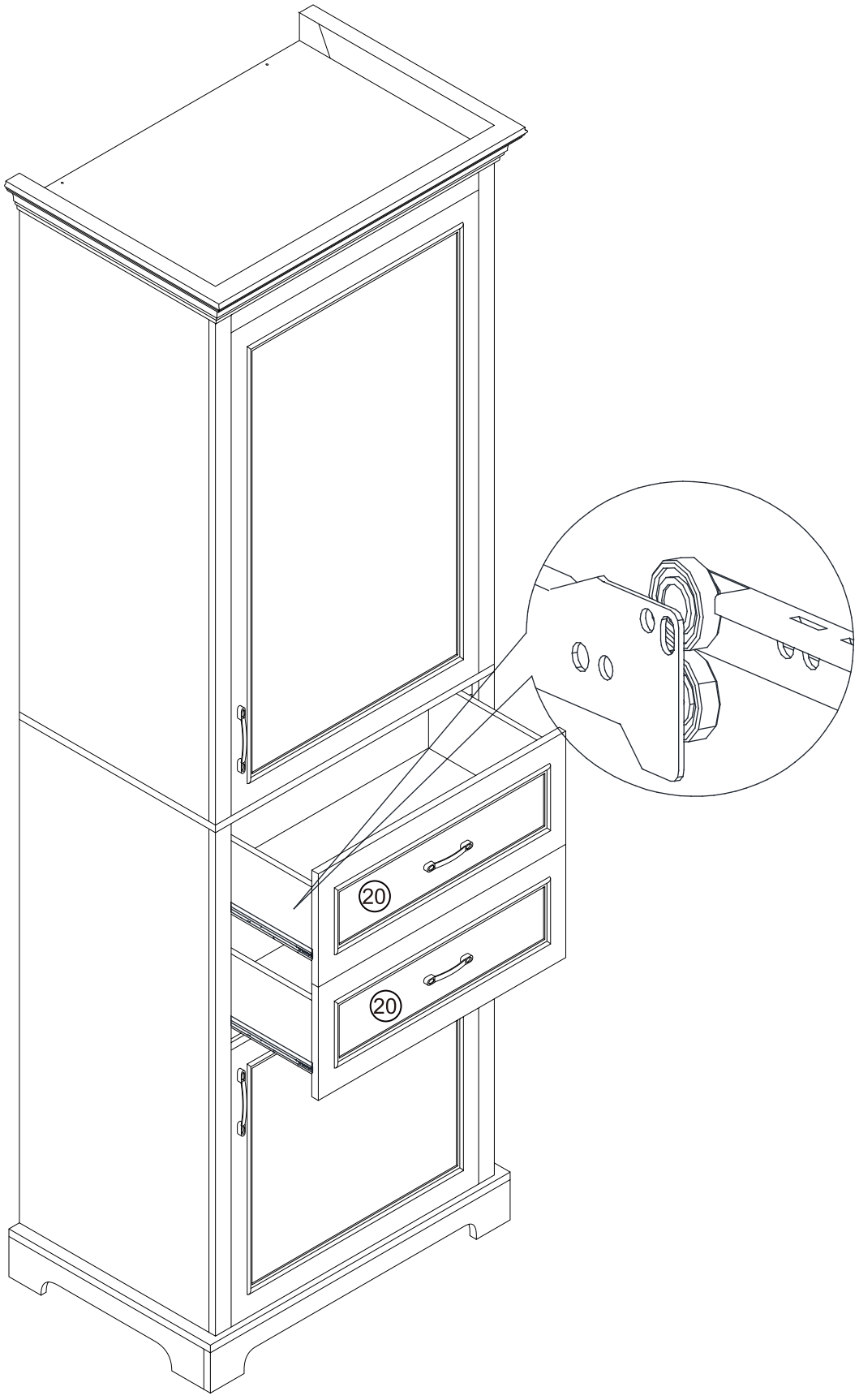

Step 24

