10FT X 12FT GARDEN STORAGE SHED

ASSEMBLY MANUAL

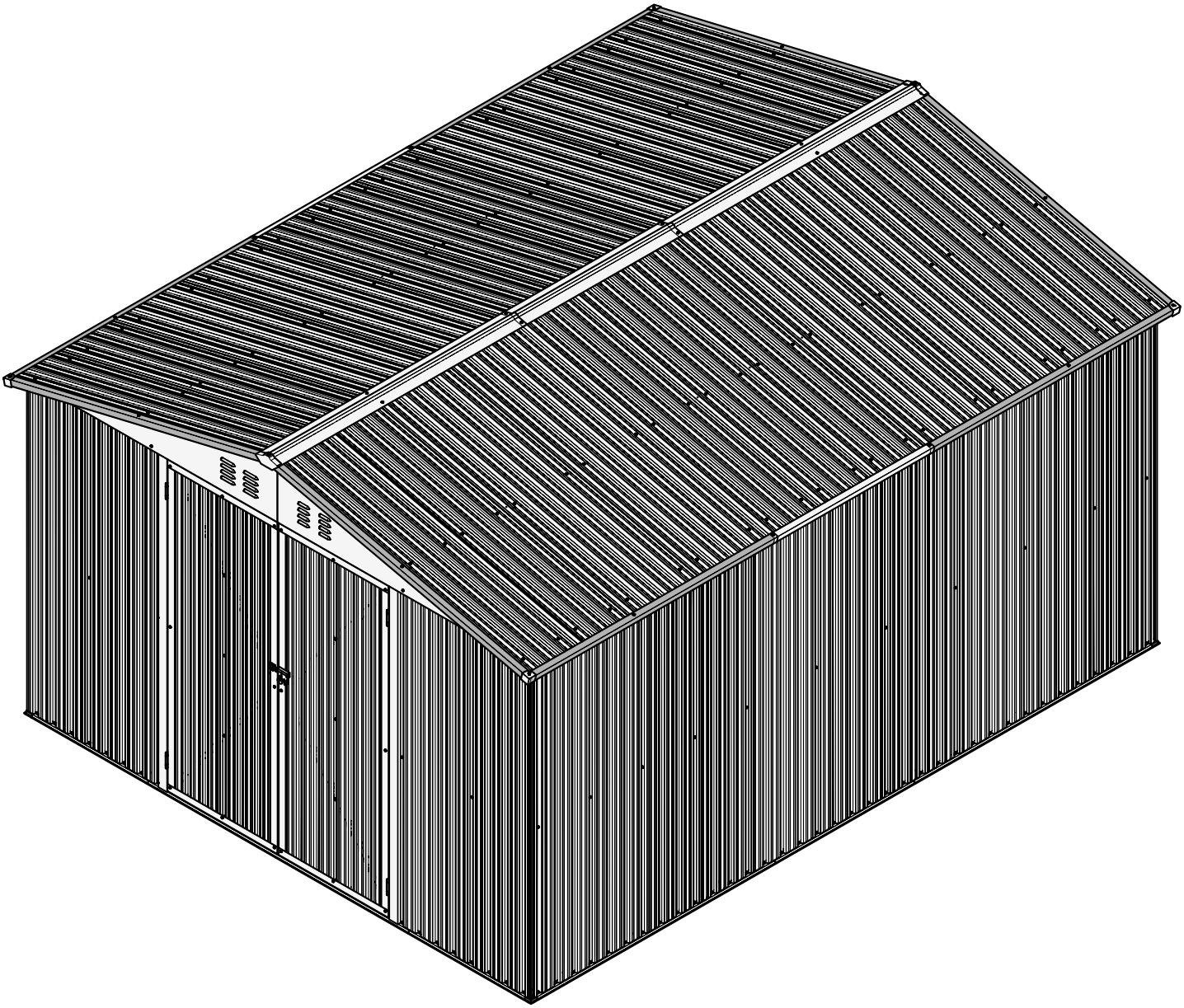

INSIDE CARTON 1

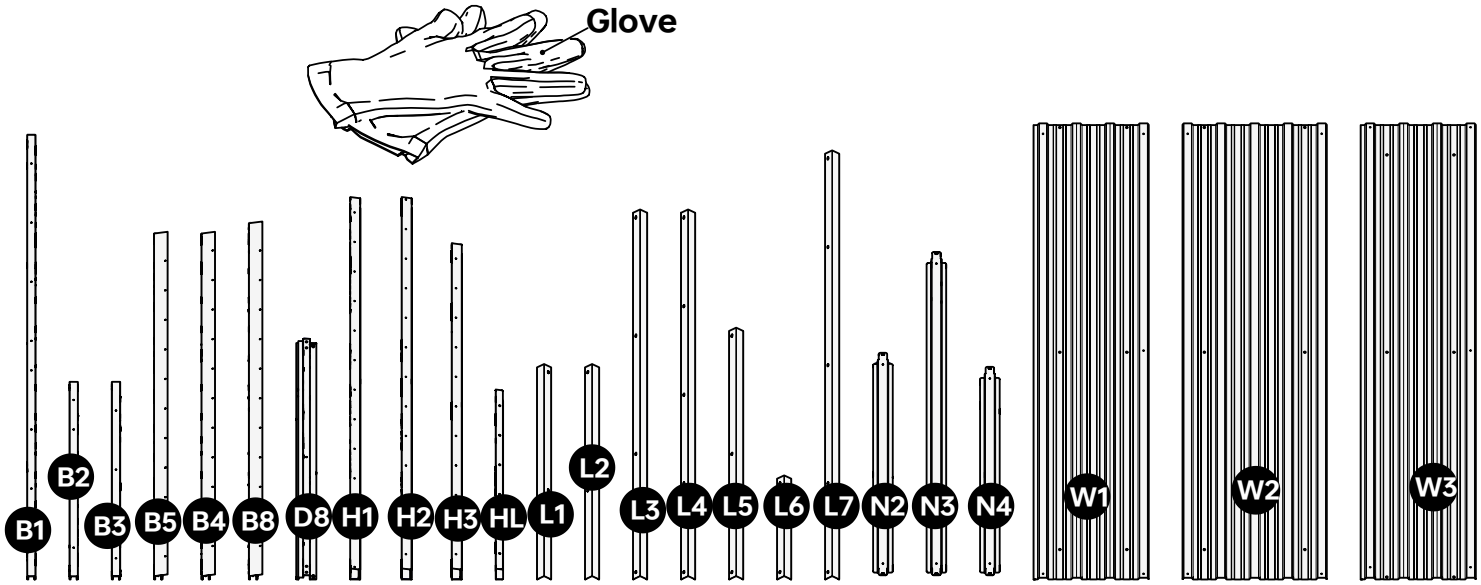

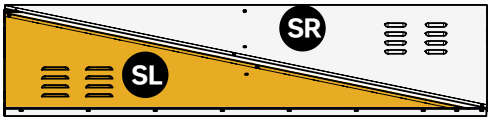

INSIDE BOX 1

INSIDE BOX 2

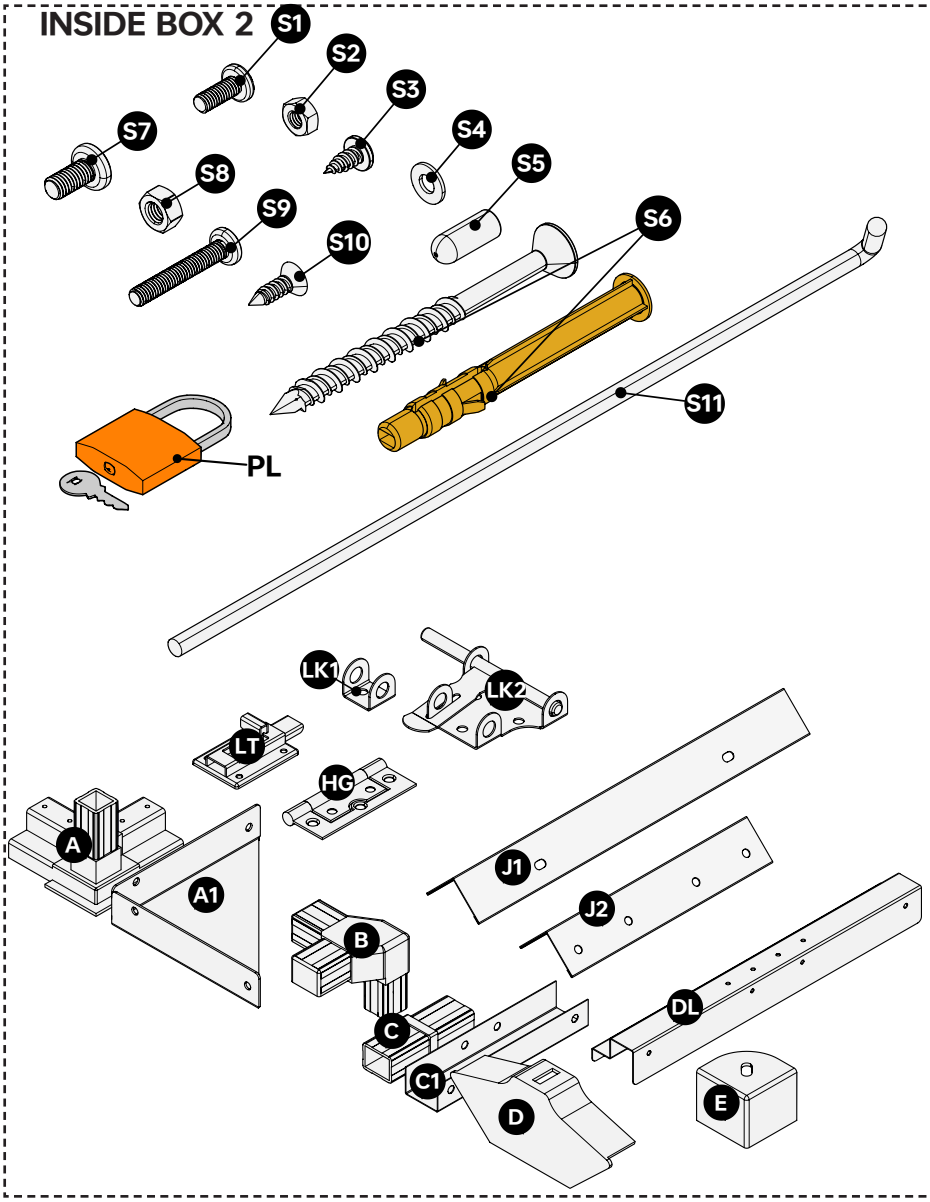

Part	Qty
B1	2
B2	2
B3	2
B4	2
B5	2
B8	2
D8	2
H1	4
H2	4
H3	4
HL	8
L1	2
L2	2
L3	2
L4	2
L5	2
L6	2
L7	1
N2	6
N3	4
N4	4
W1	12
W2	8
W3	2
SL	2
SR	2
GLOVE	2
S1	51

S2	67
S3	591
S4	464
S5	39
S6	4
S7	60
S8	60
S9	16
S10	4
S11	4
A	4
A1	4
B	4
C	8
C1	8
D	2
DL	7
E	4
HG	4
J1	4
J2	4
LK1	1
LK2	1
LT	2
PL	1

INSIDE CARTON 2

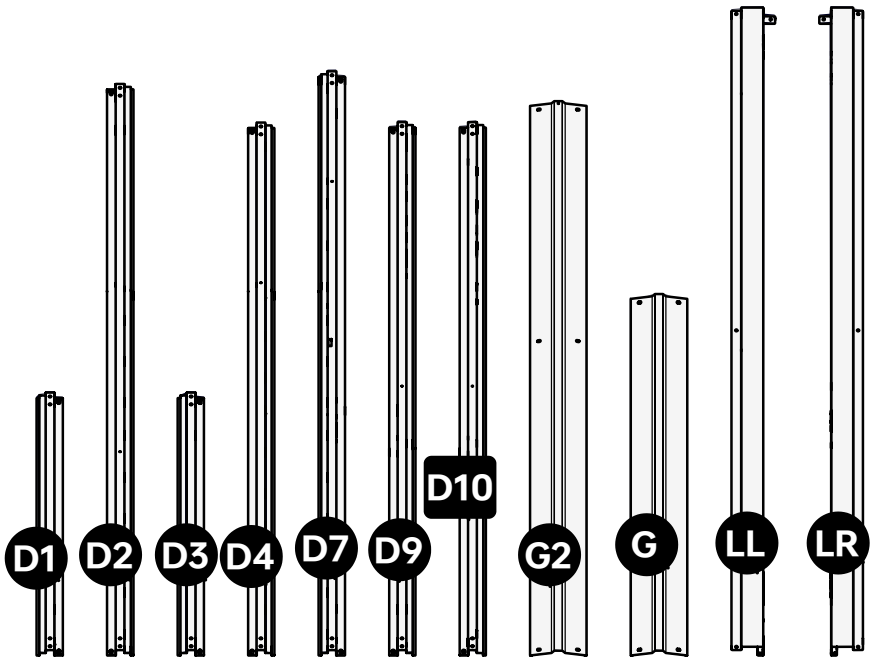

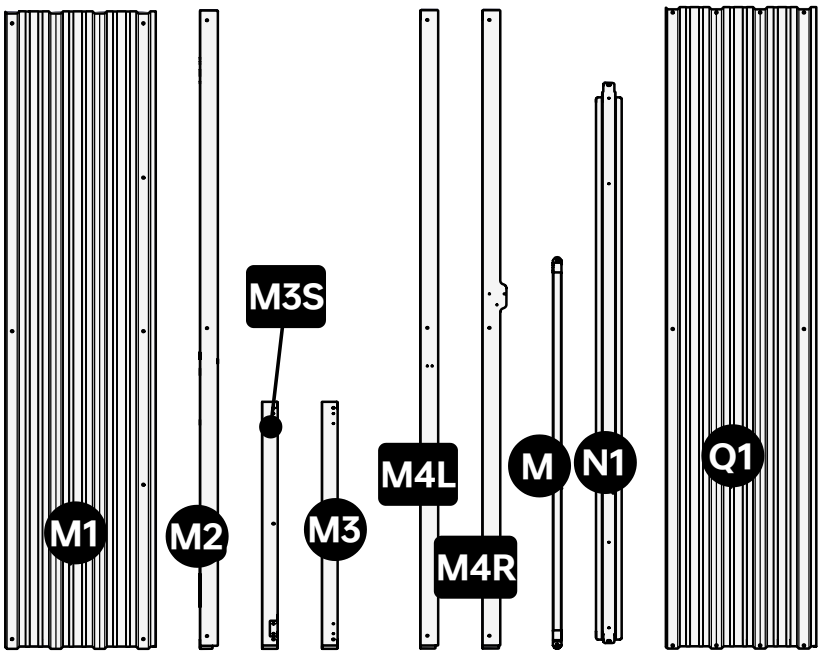

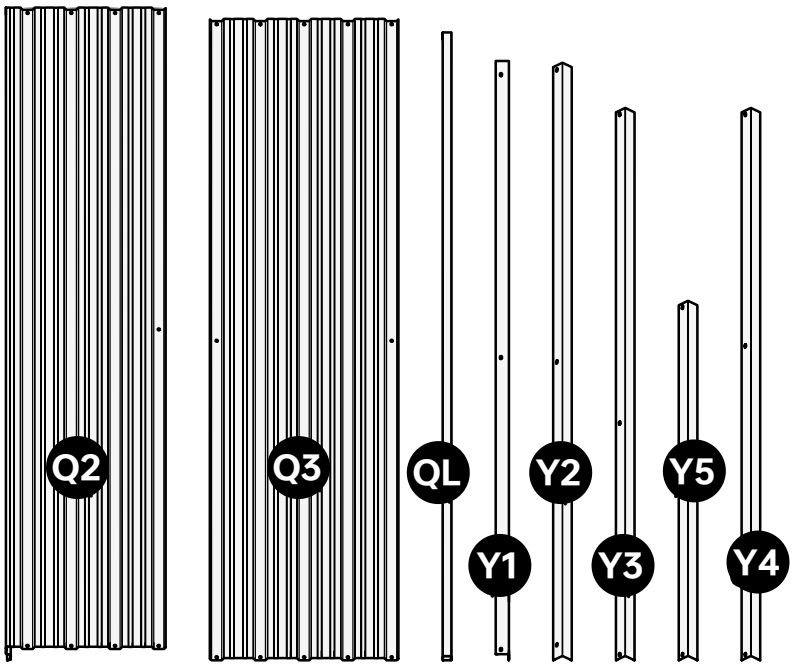

Part	Qty
D1	1
D2	1
D3	1
D4	1
D7	1
D9	2
D10	2
G2	2
G	1
LL	1
LR	1
M1	4
M2	2
M3S	1
M3	3
M4L	1
M4R	1
M	4
N1	3
Q1	12
Q2	4
Q3	16
QL	4
Y1	2
Y2	2
Y3	2
Y5	2
Y4	2

01 Getting Started

Thank you for buying our garden Shed. Please read the manual thoroughly before assembling the shed.

General Advice and Safety Guidelines

This product is designed for storing and sheltering items like tools, equipment and vehicles. It is not designed or intended for human or animal habitation.
It takes at least two people three hours to finish the assembly.
Assemble the shed when the weather is on your side. Avoid windy and rainy days.
Do not assemble the shed if you are tired, have taken drugs, or under the influence of alcohol.
Always wear work gloves, shoes, and safety goggles when assembling.
Keep children and pets away from the assembly site.
Watch out for overhead power cables.
Follow the instructions step by step.
Dispose of all plastic bags and protective films.
Do not climb or stand on the roof.
Do not lean against or push the unfinished shed.

Tools

Work Gloves, Safety Goggles, Tape Measure, Level, Carpenters Square, Marker Pen, Rubber Mallet, Philips head screw driver or Power tool, M4/M5 Wrench, Ladder, Plier.
Optional: Concrete Drill with M6 Drill Bit.

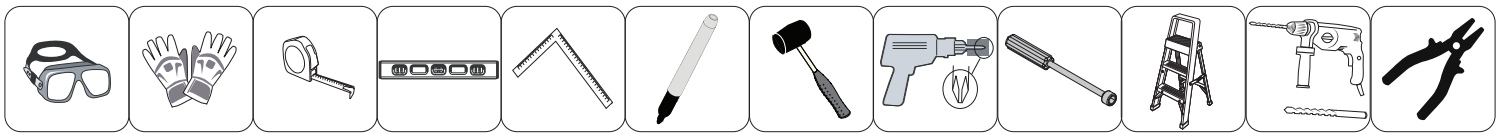

Part Checking

Put parts on a soft and clean surface, such as a blanket. This will prevent the parts from getting scratched or dented by the hard ground.
Compare the part list with the actual parts you received.
If you find any parts missing or damaged, do not assemble the shed. Contact the seller.

ABOUT THE PROTECTIVE FILM

Panels of the shed come with a thin layer of protective film. Remove the film before assembling.

ABOUT STACKED PARTS

There are cases where two parts are stacked firmly and may appear to be a whole part.

Care and Maintenance

Clean the shed once assembly is done.
Use warm water, mild detergent, and a soft sponge or cloth to clean the surface.
Clear snow from the roof top after each snowfall.
Do not store recently used grills, blowtorches, paint, etc in your shed.

02 Assembly Site

Location

This garden shed occupies an area of 11.1m² (119ft²) on the ground, with a length of 3.7m (12.1ft) and a width of 3m (9.8ft).
Additionally, the shed should have at least 0.91m (3ft) of clearance on all sides from any obstacles, such as trees, fences, or buildings. This allows for adequate ventilation, drainage, and access to the shed.
Make sure there are no hidden pipes, cables, or septic tank in the ground.

Two Foundation Options

This shed must be anchored to a level and solid foundation to increase its stability.
In the package there are bolts and parts to accommodate the following foundation options:
1. Anchored to a concrete foundation.
2. Anchored into the ground.

Details about the two foundation options will be discussed in later steps.

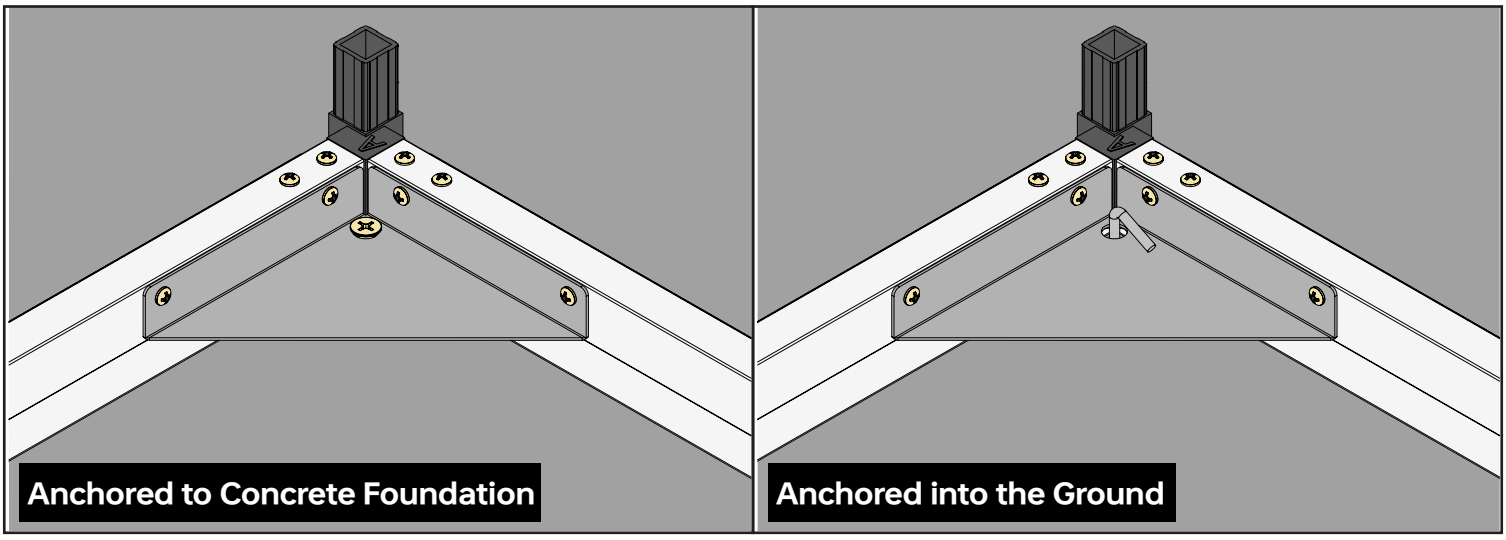

03 Base Frame

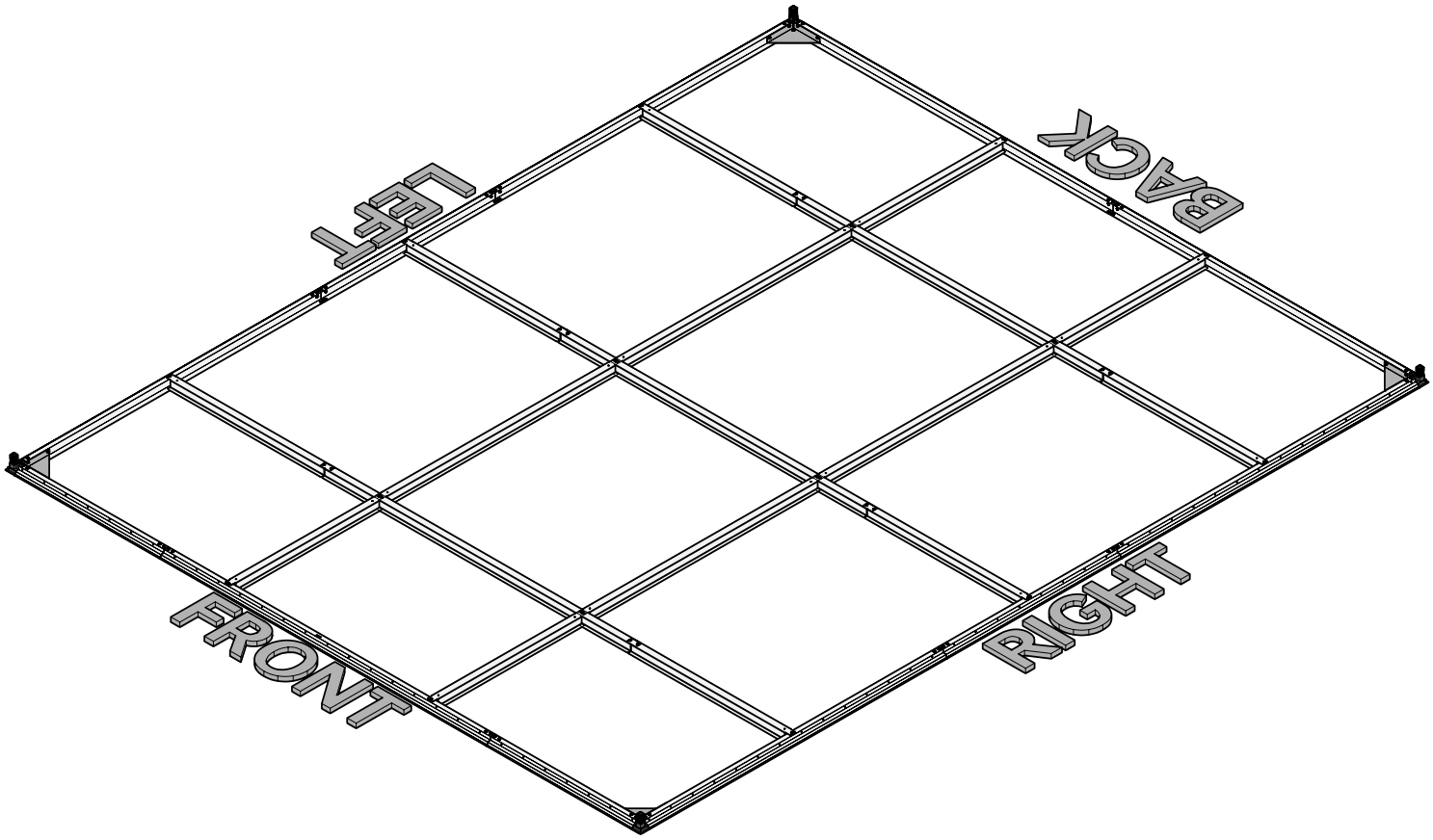

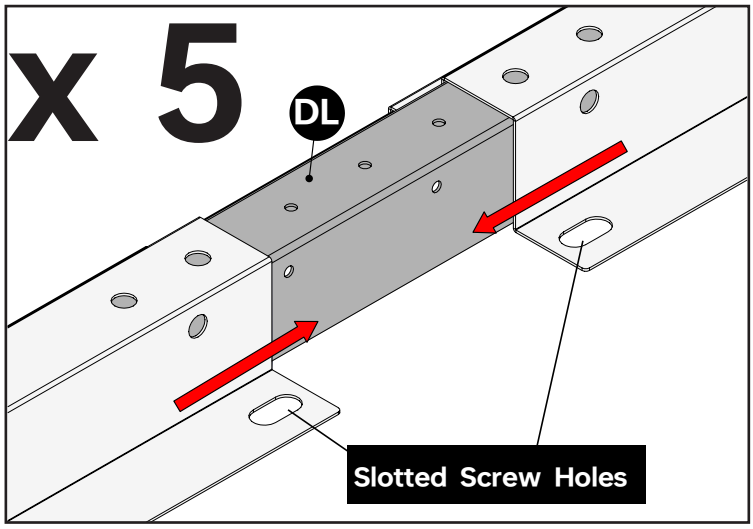

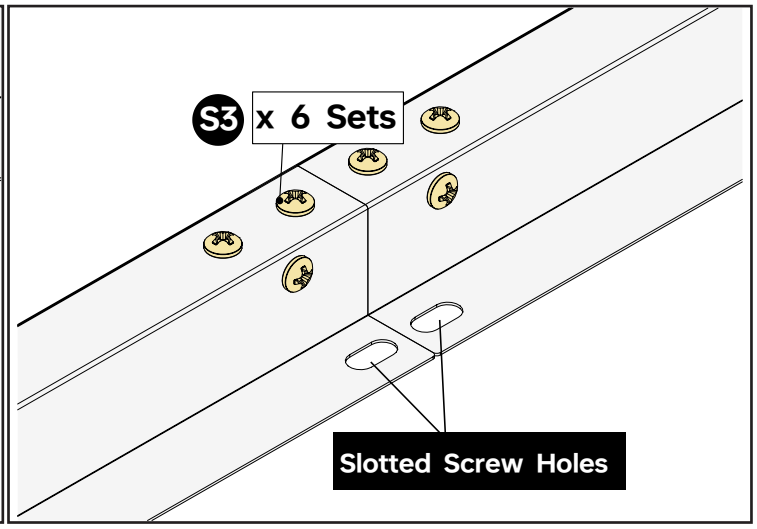

NOTE

In this manual, the bigger mark like x 5 means you will need to repeat this sub-step 5 times, and the smaller sign like S3 x 6 Sets means this sub-step uses 6 sets of S3.

Part	Qty
D1	1
D2	1
D3	1
D4	1
D10	2
D9	2
D7	1
D8	2
DL	7
S3	42

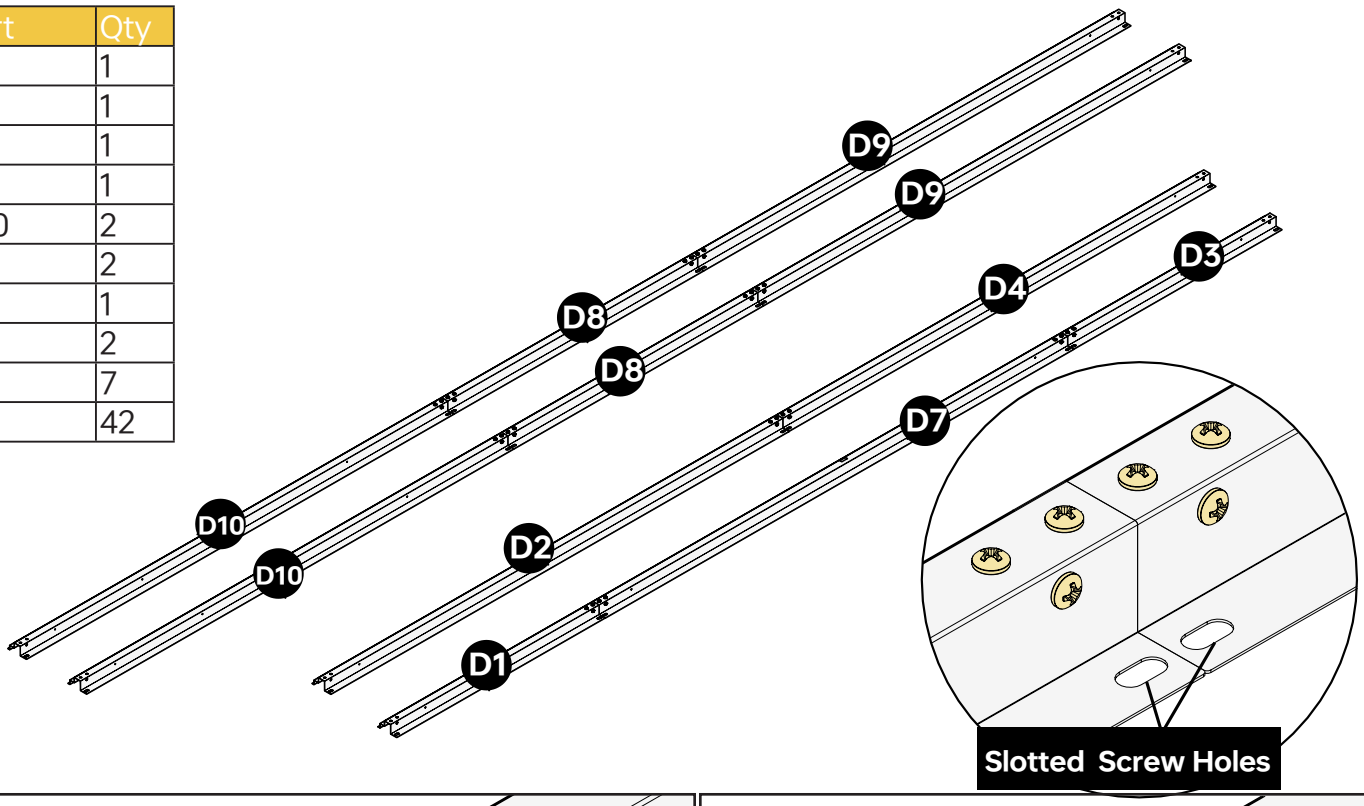

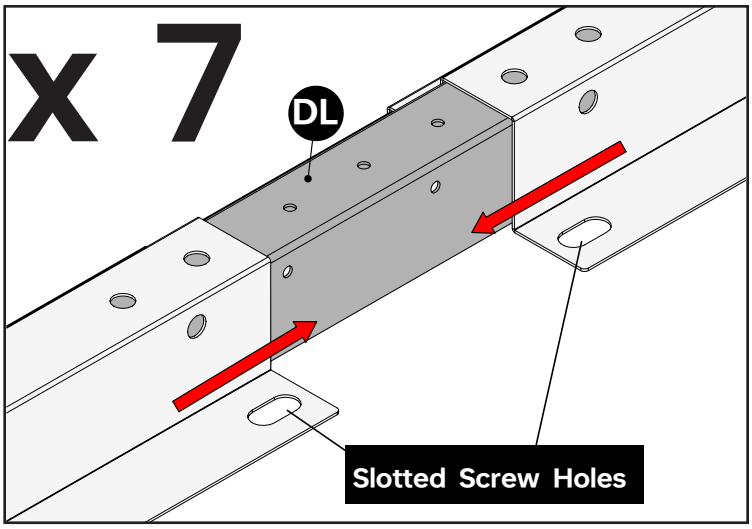

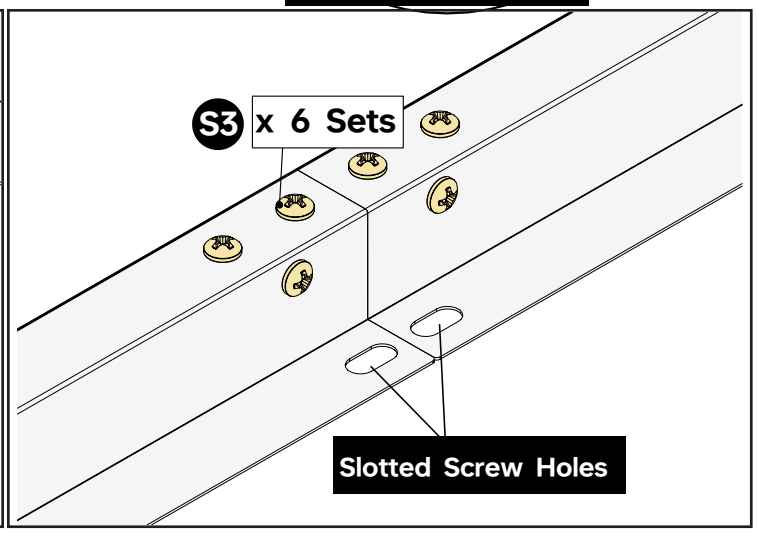

NOTE

When connecting D1~D10 frames, make sure
a) you are positioning them exactly the same as what's shown above and
b) the two slotted screw holes are in the front.
Two examples of incorrect layouts are shown below. Note that for the second mistake, even though D10 is placed on the left, the slotted screw holes are not in the front, so the placement is also incorrect.

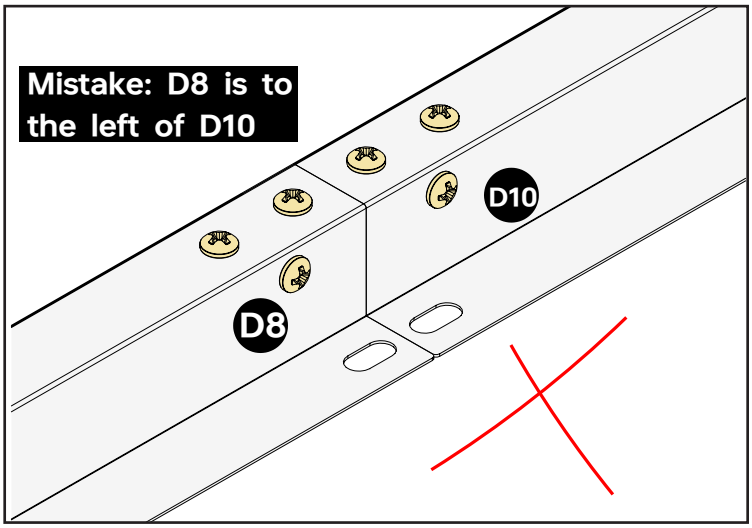

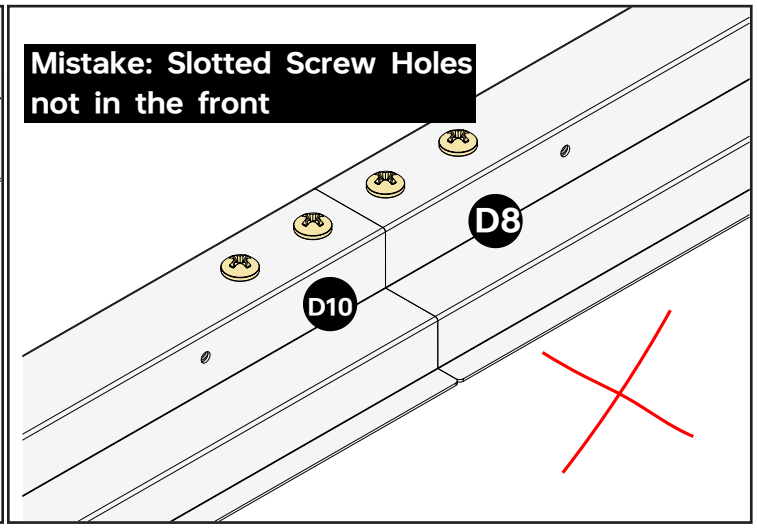

2

Part	Qty
A	4
A1	4
S3	32

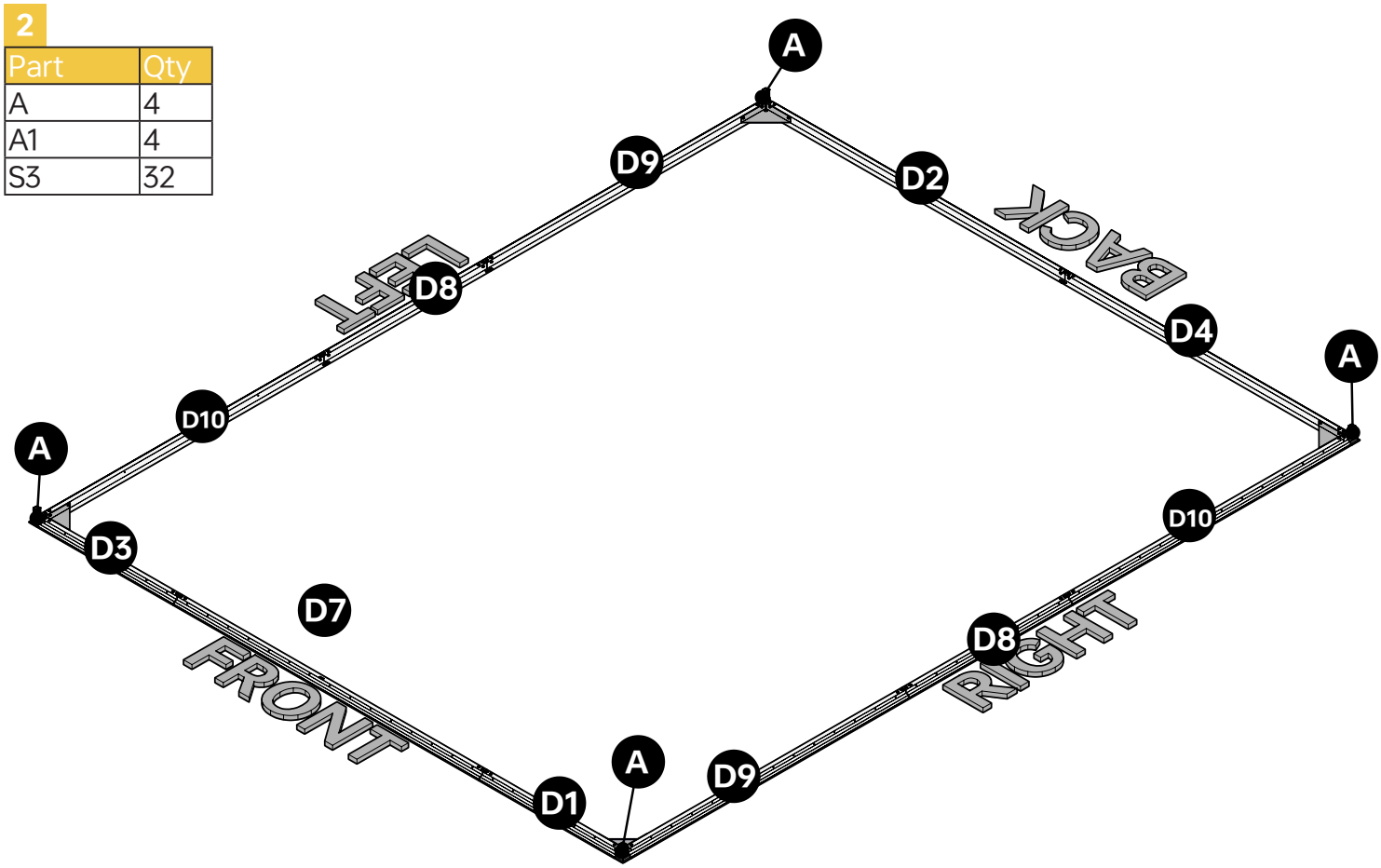

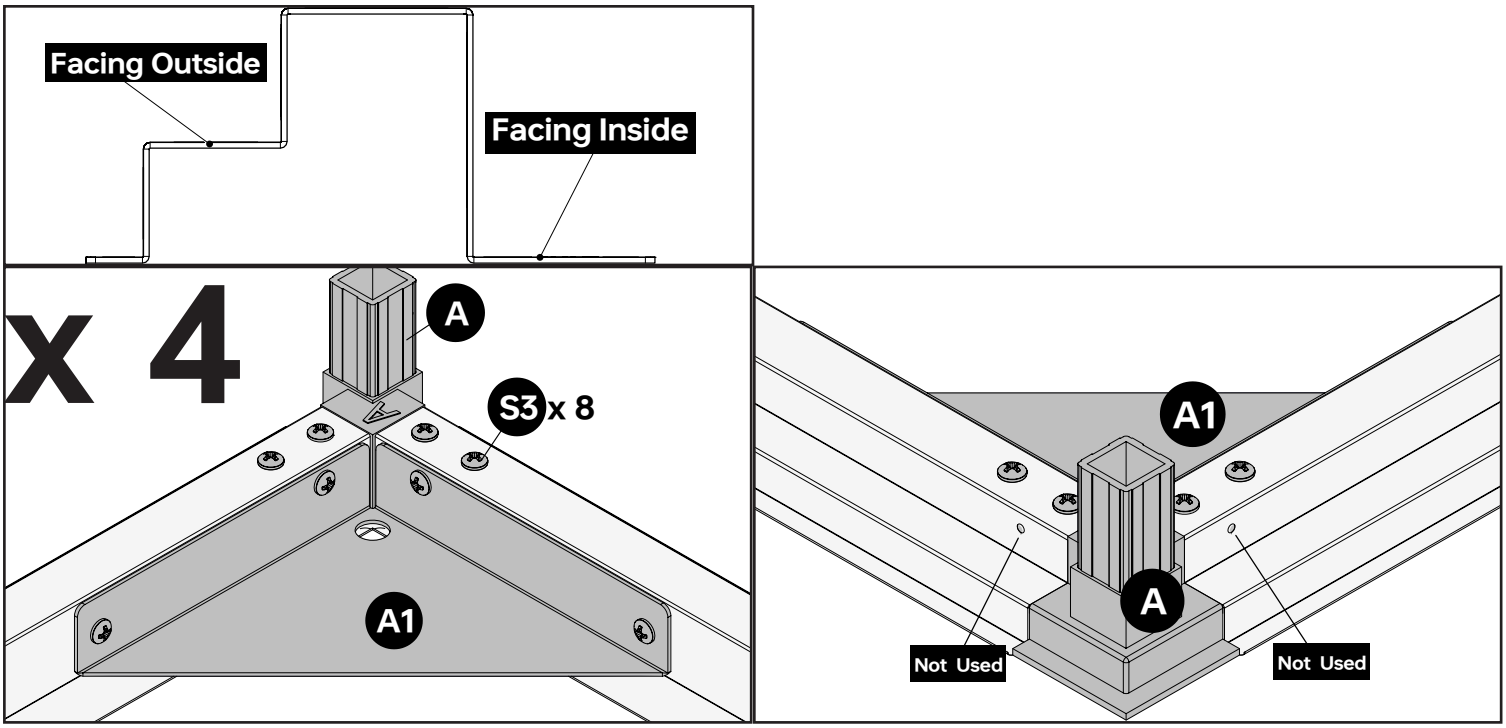

NOTE

When placing D1~D10, note that they have a side that should always be facing outside. If you have problems positioning the frames like what's shown above, it's very likely that step 1 was not correctly followed.

When screwing S3 into part A, do not use the two screw holes that are facing outside. They will be used in later step.

3

Part	Qty
N1	3
N2	6
S3	18

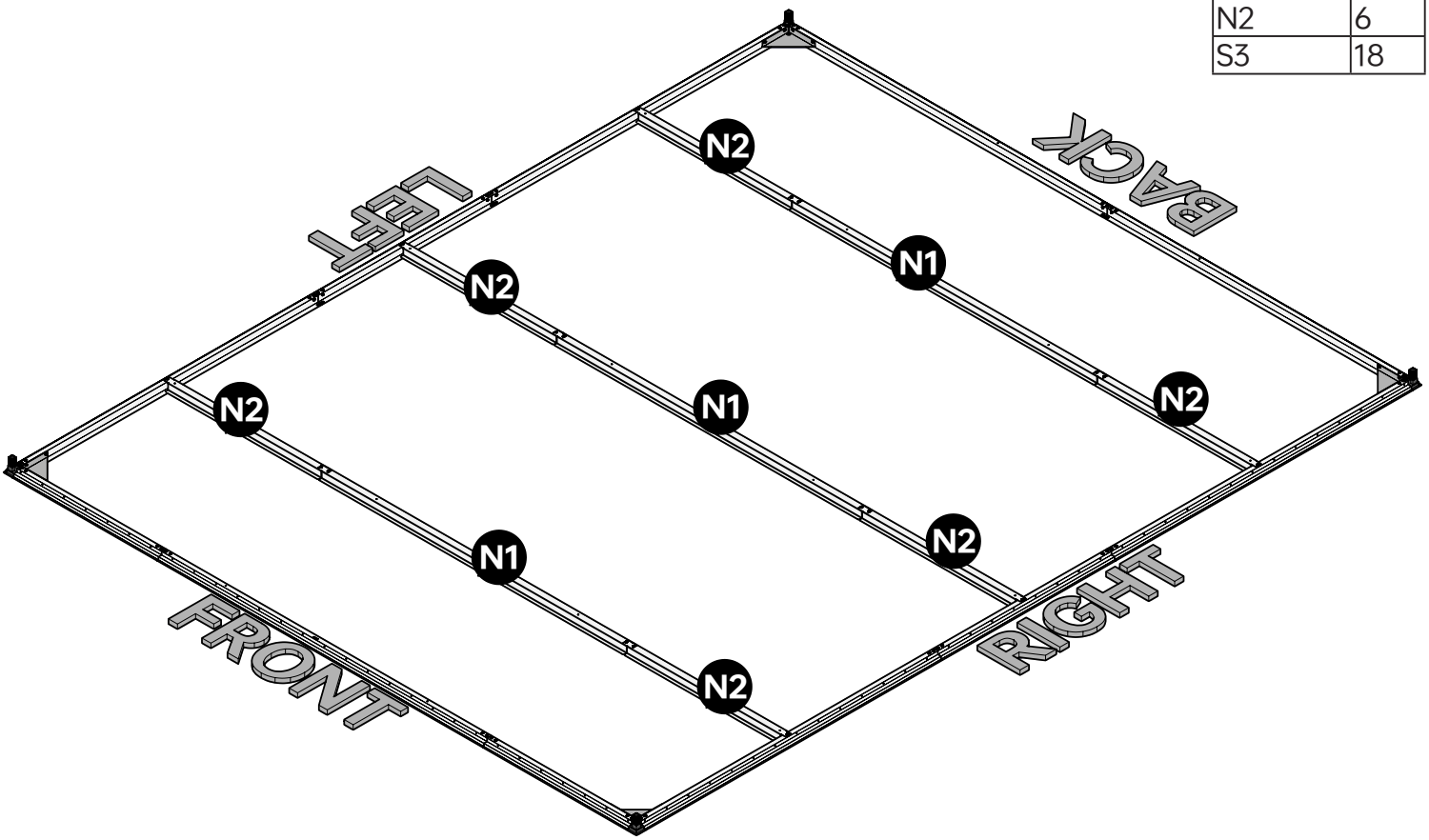

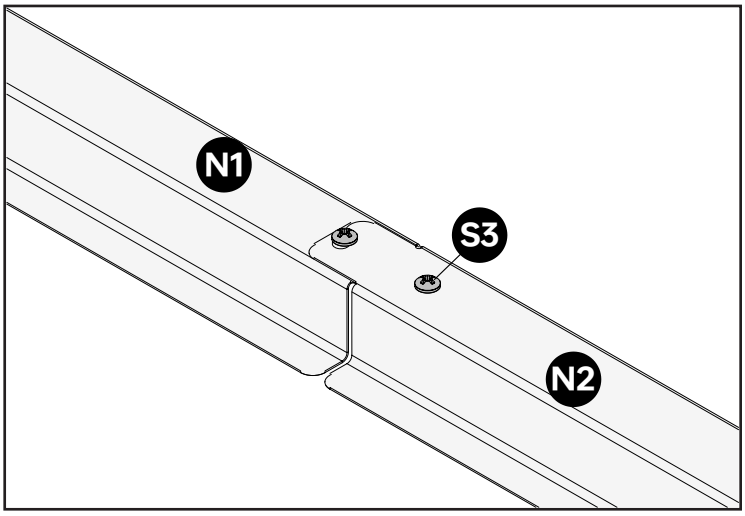

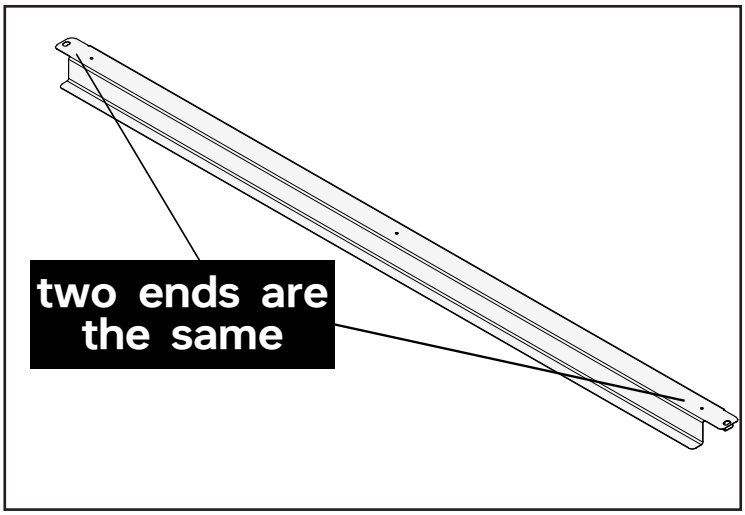

NOTE

Frames like N1N2 are symmetrical and you can use either end to attach to frames D1~D10.
When N1 and N2 are stacked together, it does not matter which one is on top.

4

Part	Qty
N3	4
N4	4
S3	10

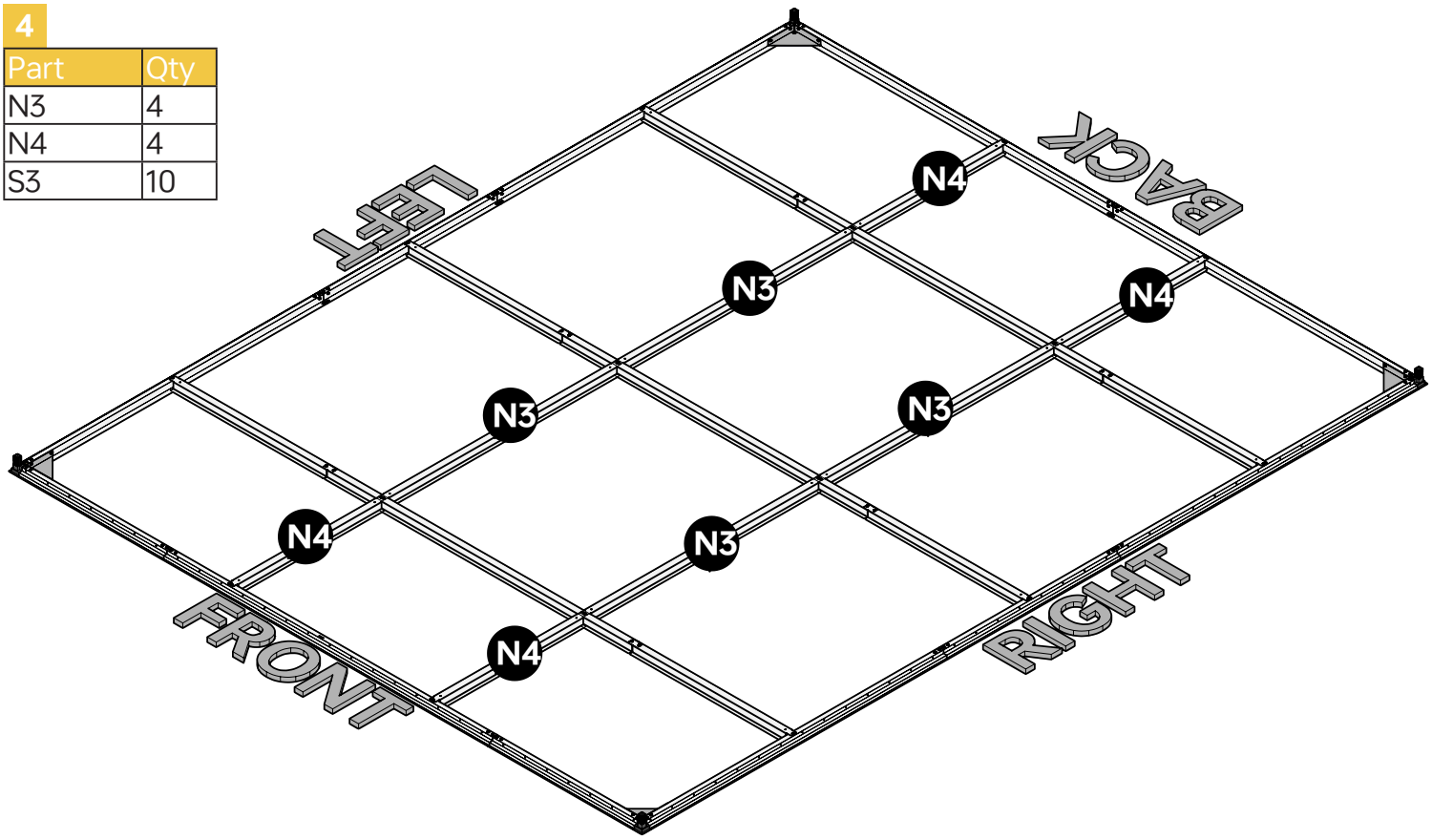

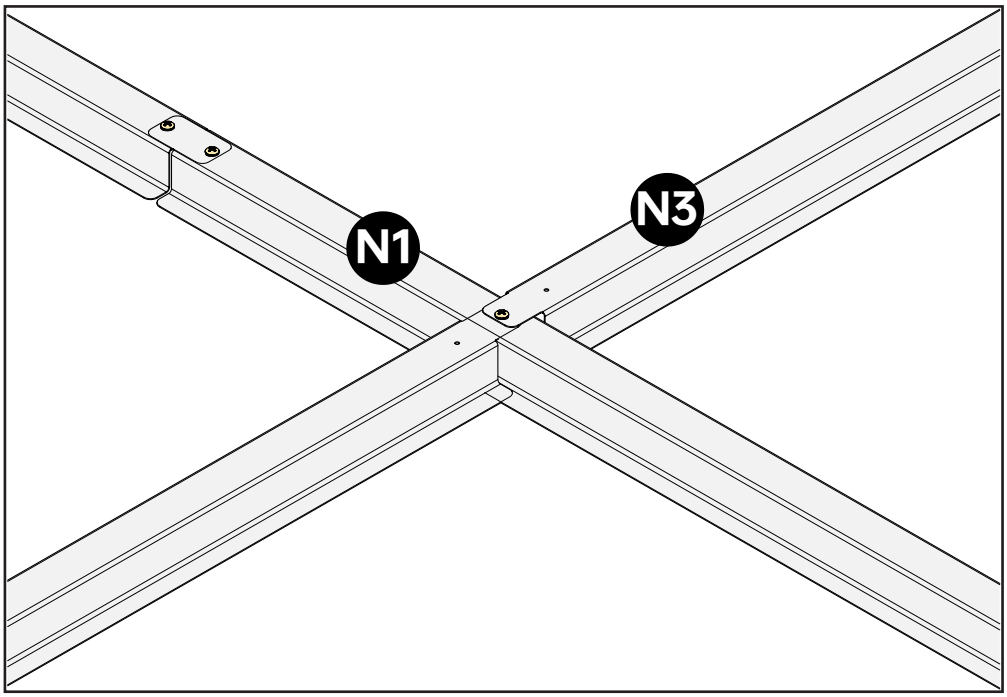

NOTE

Similar to last step, when N3 and N4 are stacked together, it does not matter which one is on top. There will be some screw holes left unused on N1~N4.

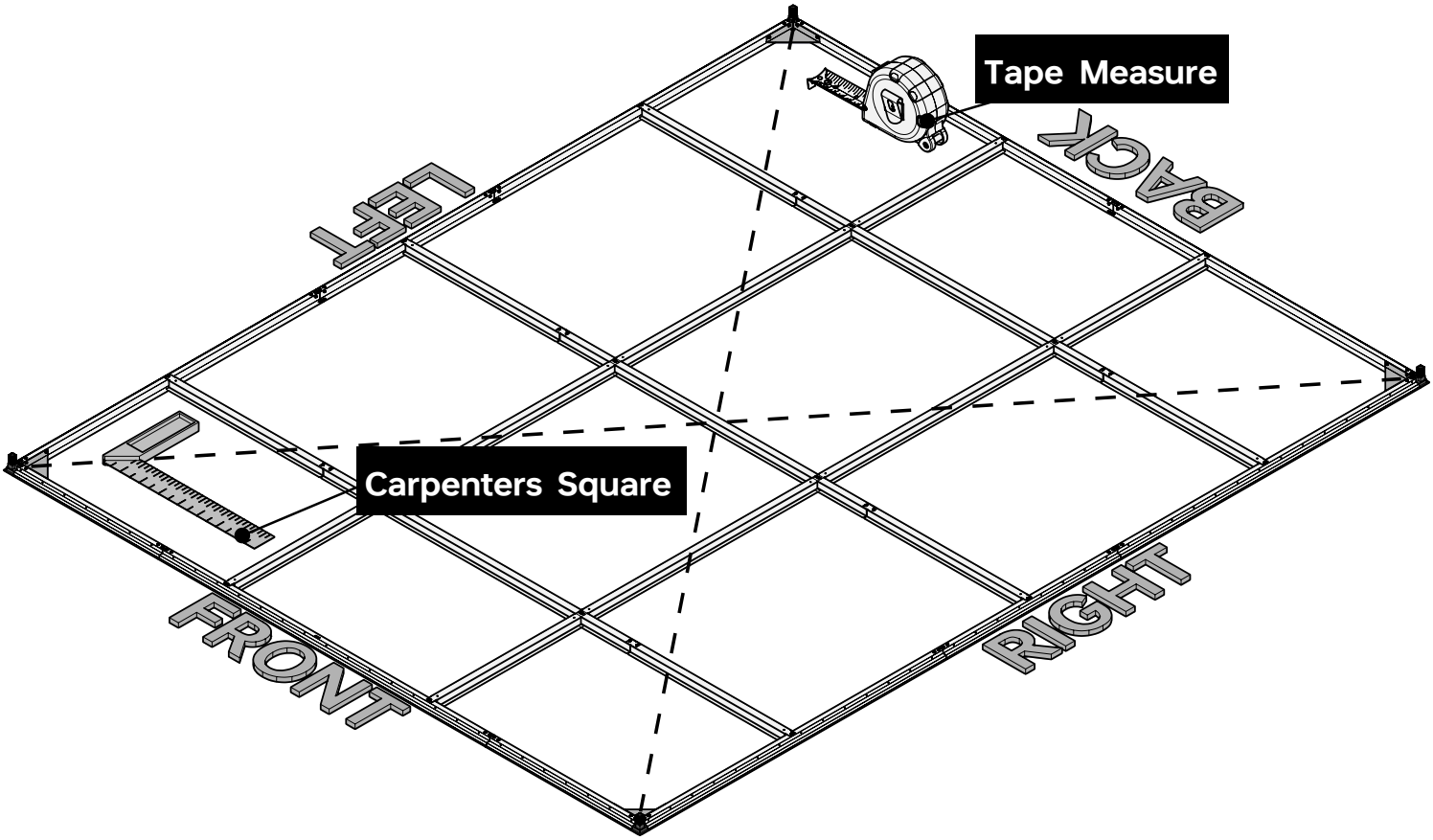

IMPORTANT

After the base frames are fully assembled, use a carpenter square to check that the four corners are square. Use a tape measure to check that the two diagonal lines of the frames are of the same length. Adjust the connection between D1~D10 and N1~N4 if the two diagonal lines have different lengths.

OPTION 1 ANCHORED TO CONCRETE FOUNDATION

6

Part	Qty
S6	4

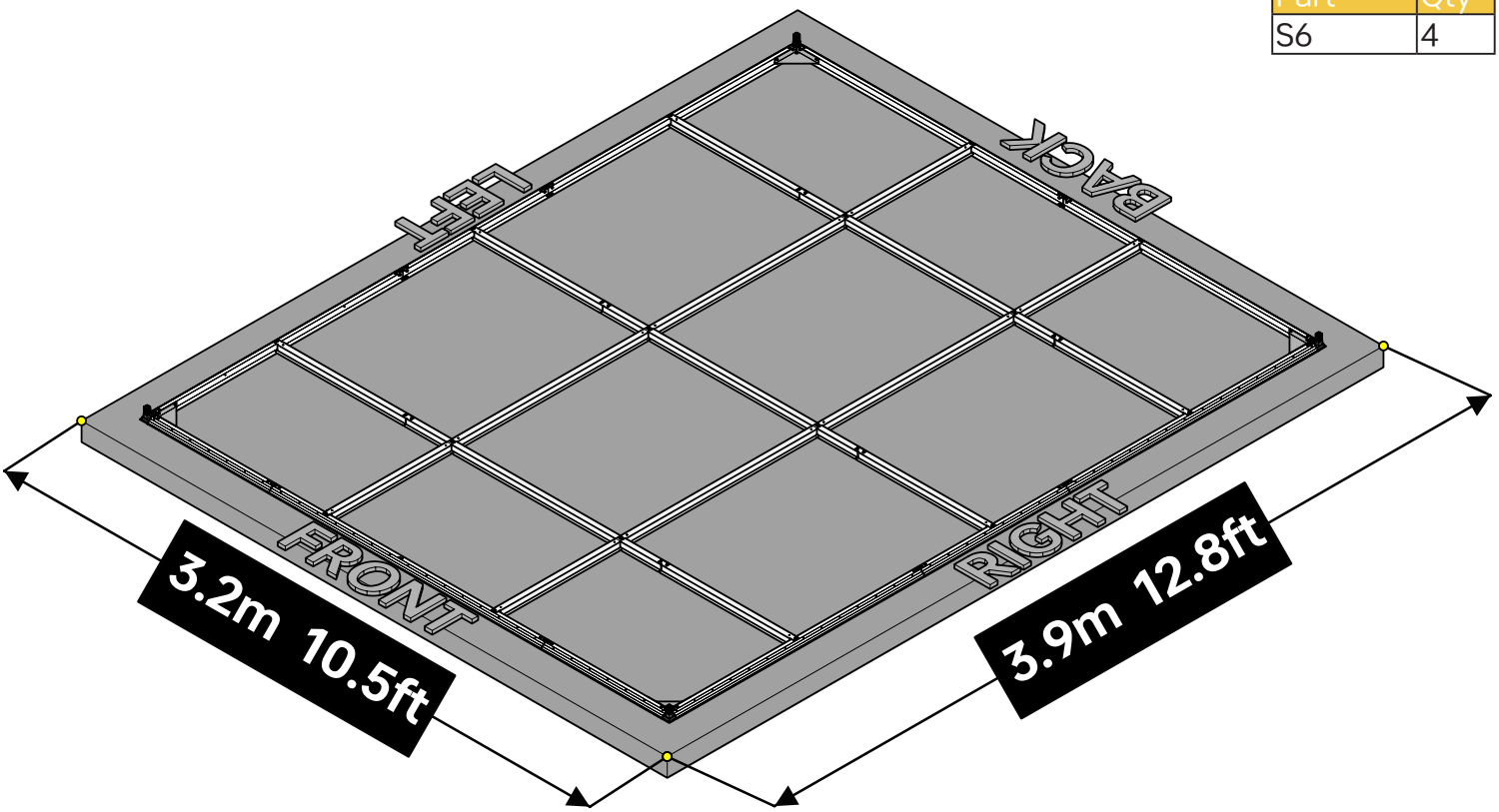

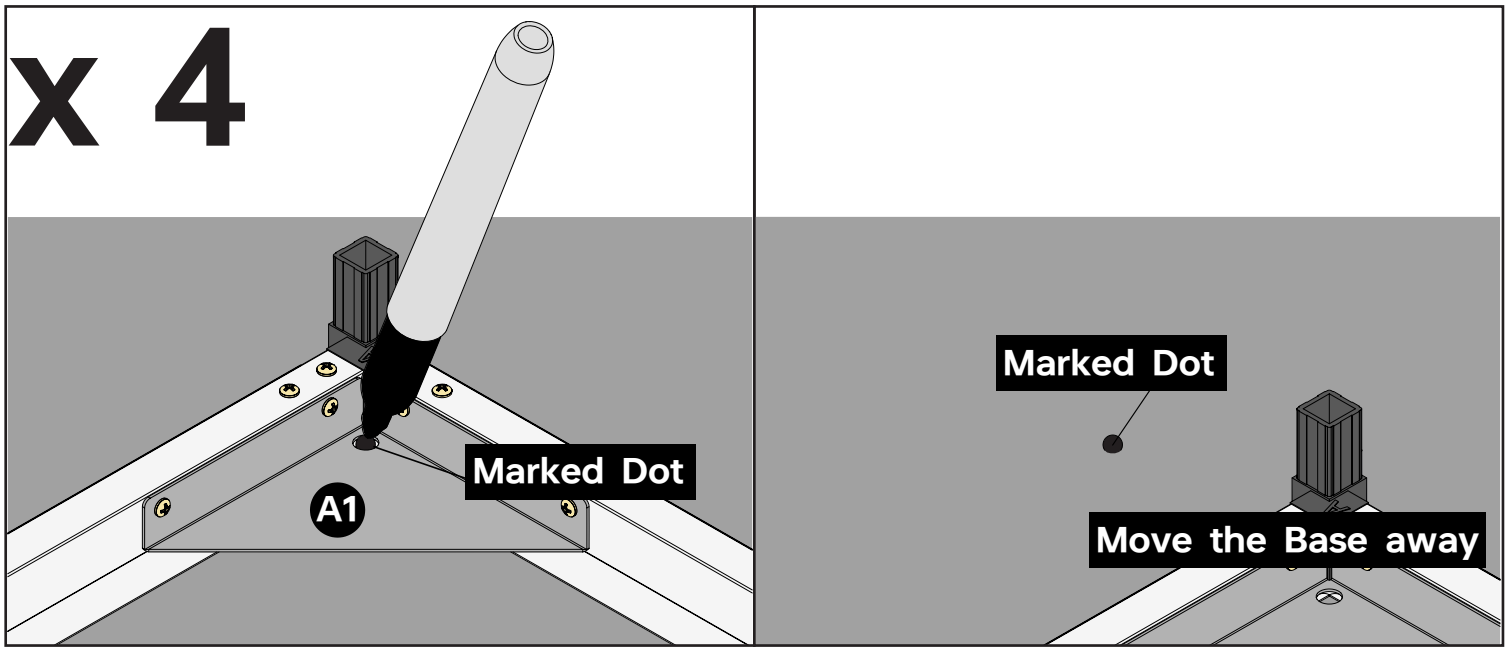

NOTE

In each corner you will find a part A1 with a screw hole on it. Use a marker pen to mark a dot through the hole onto the foundation. Then move the base away.

Continued on next page for this step.

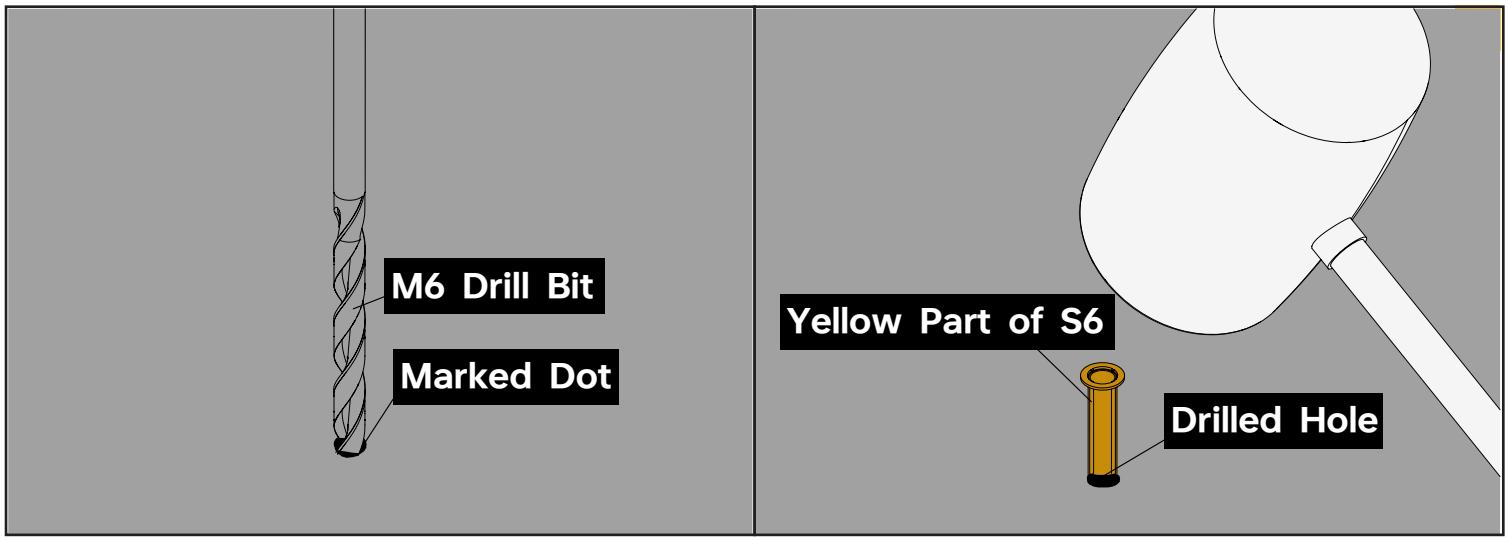

NOTE
Use a concrete drill with M6 drill bit to drill through the four marks. The drilled depth is 8cm (3.15inches). Use a rubber mallet to hammer the yellow plastic part of S6 into the drilled holes. Only use the yellow plastic part of S6 in this step. Do not use the screws of S6.

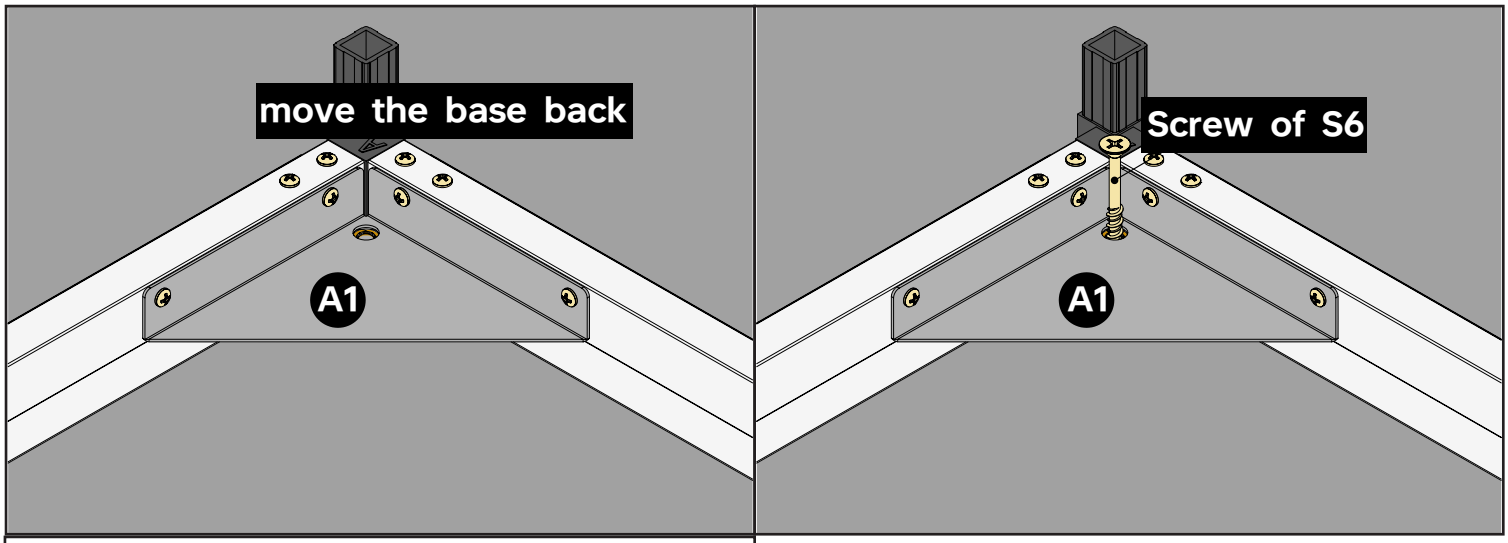

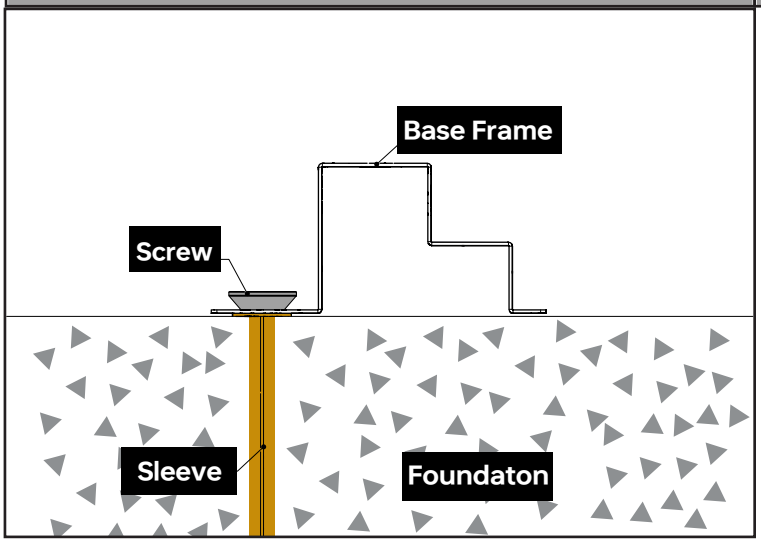

NOTE
Move the assembled base back onto the foundation and use the screw part of S6 to secure the frame to the foundation.

This concludes option 1.

7 OPTION 2 ANCHORED INTO GROUND

Part	Qty
S11	4

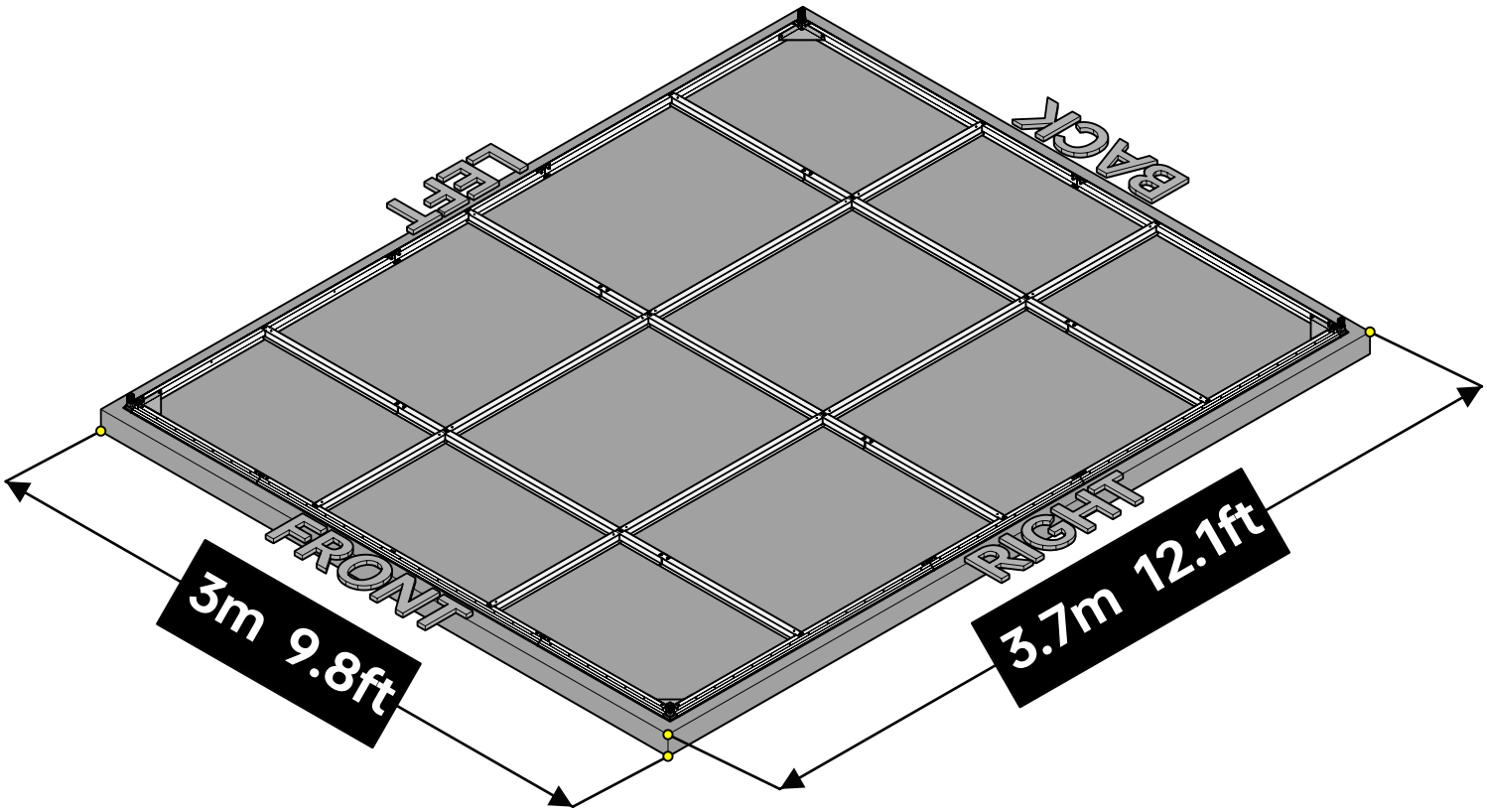

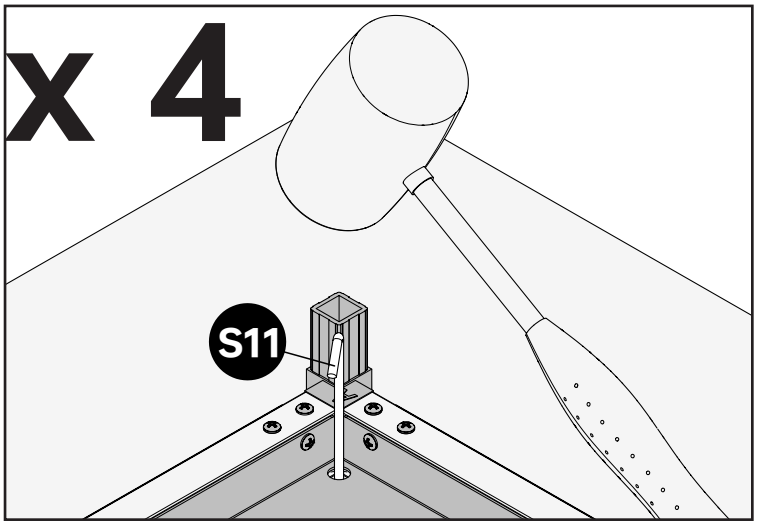

NOTE

This garden shed occupies an area of 11.1m² (119ft²) on the ground, with a length of 3.7m (12.1ft) and a width of 3m (9.8ft).

This is the size of the roof and is larger than the size of the base frame.

You will still need a 0.91m (3ft) of clearance on all sides from walls or fences.

For this foundation option, all you need to do is use a mallet to hammer the S11 anchor to the ground.

This concludes the base chapter.Starting from next chapter, we will be demonstrating how to assemble the rest of the shed without showing the foundation.

04 Wall

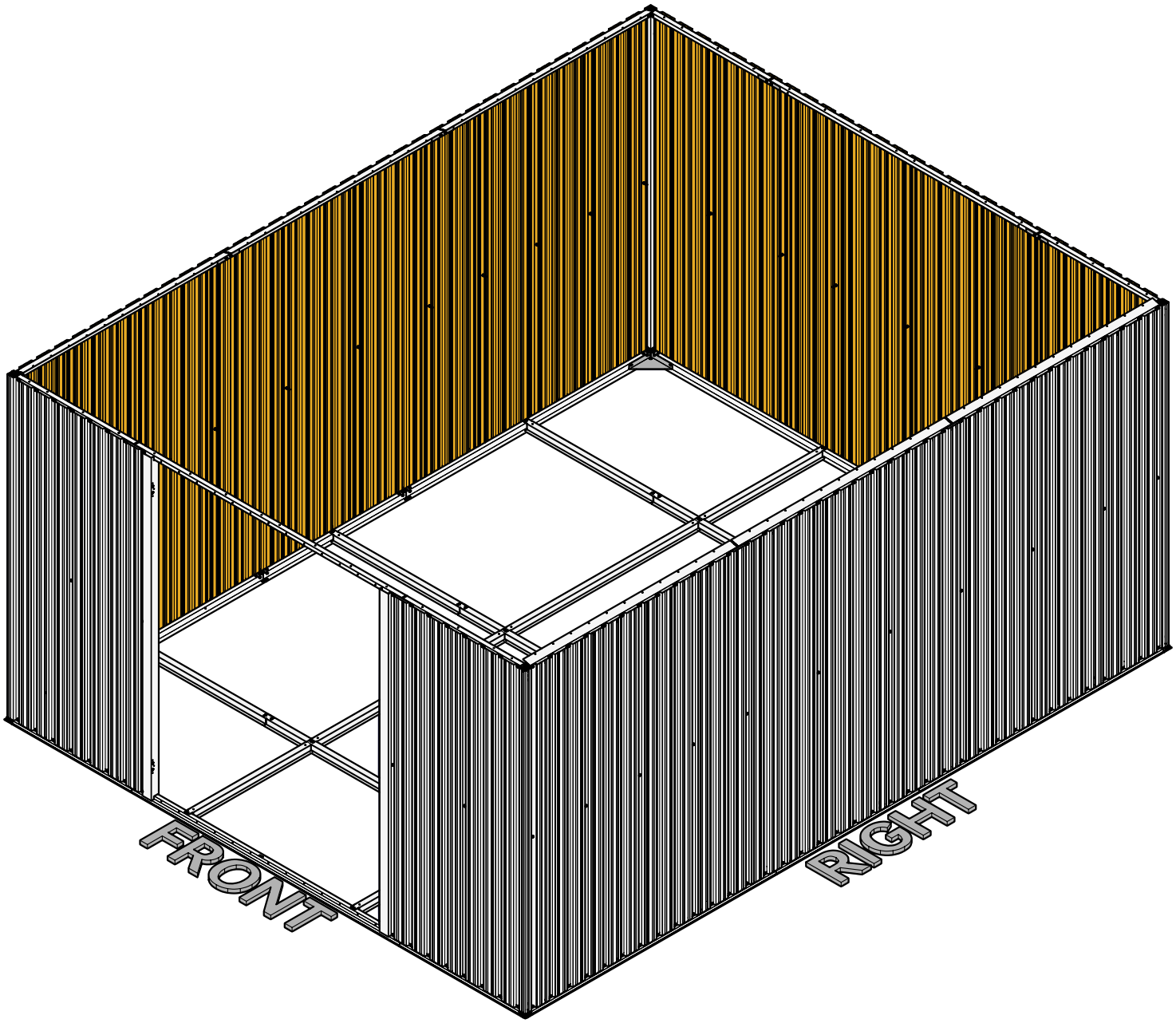

1

Part	Qty
QL	4

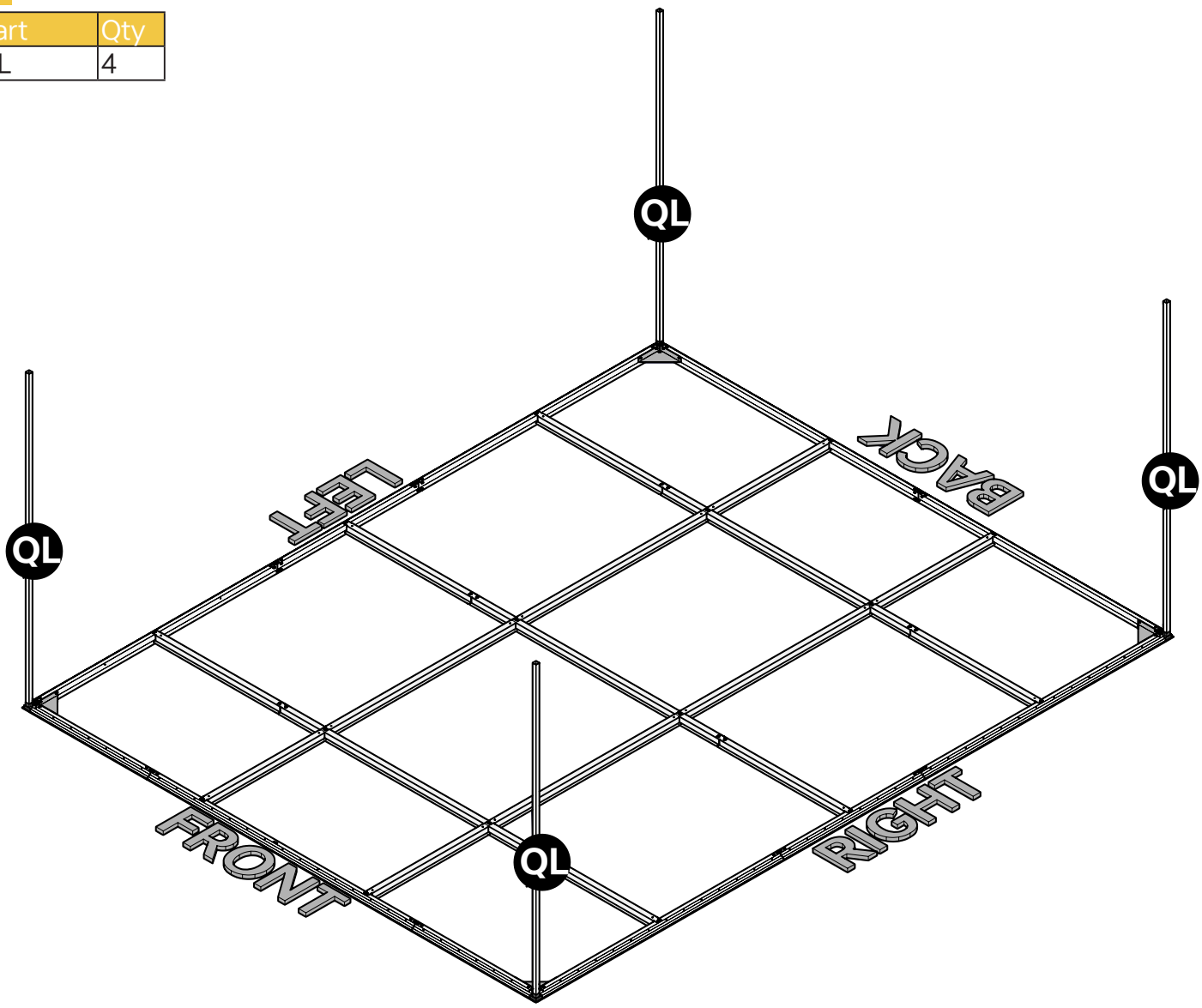

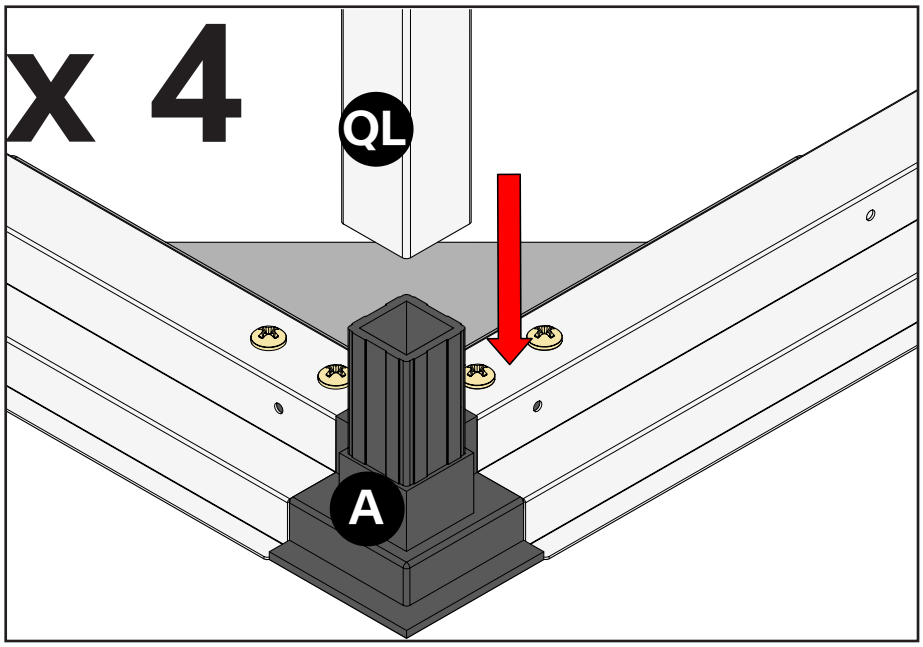

NOTE

No screws are used when attaching QL to A. Also, you can attach either end of QL to A.

2

Part	Qty
B1	2
B2	2
B3	2
B4	2
B8	2
B5	2
C	8
C1	8
S3	16

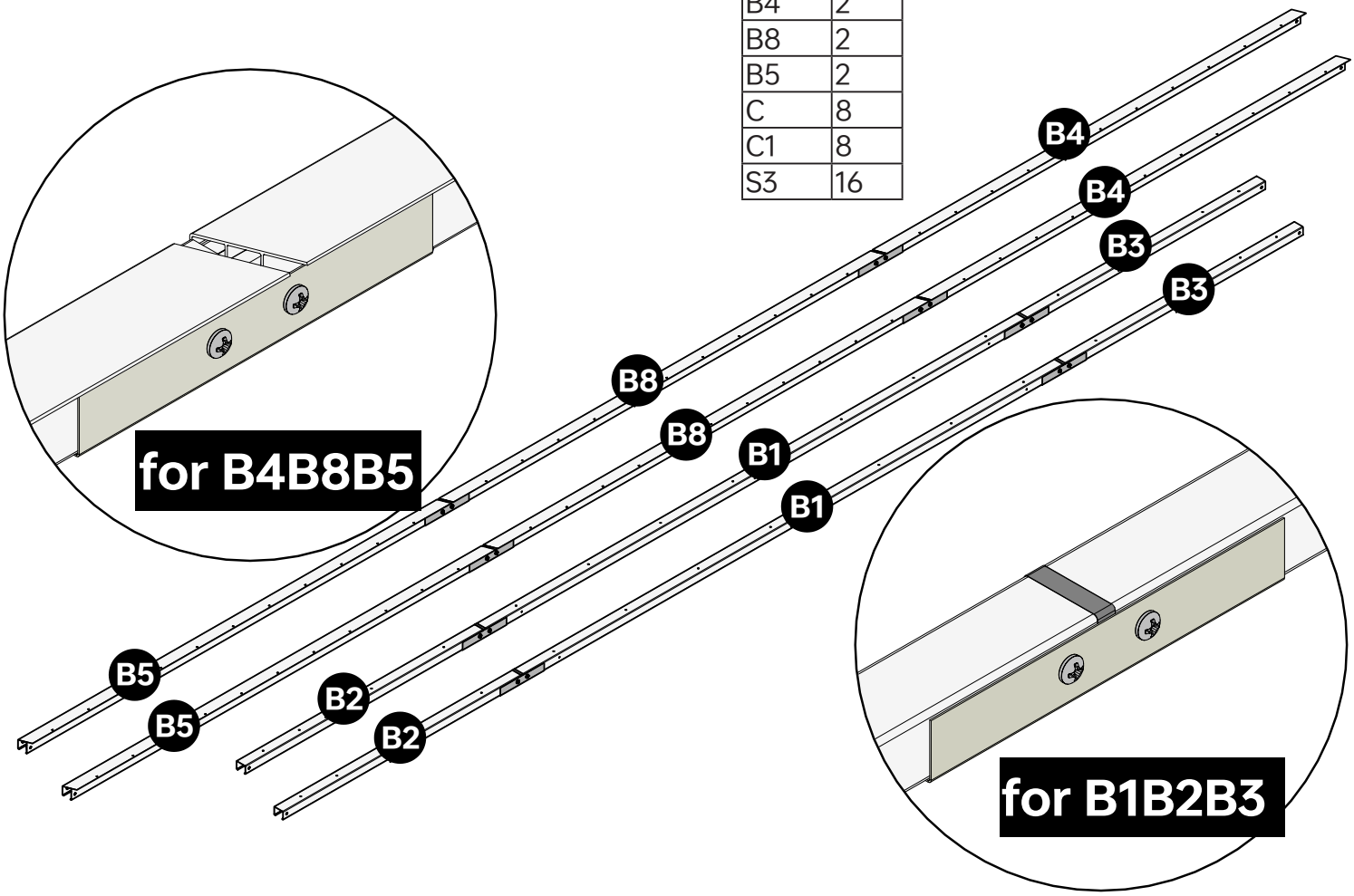

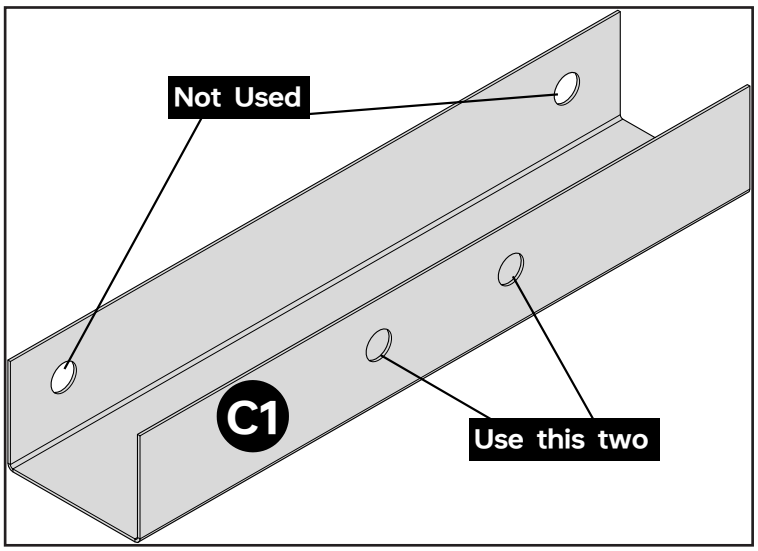

NOTE

Continued on next page for this step.

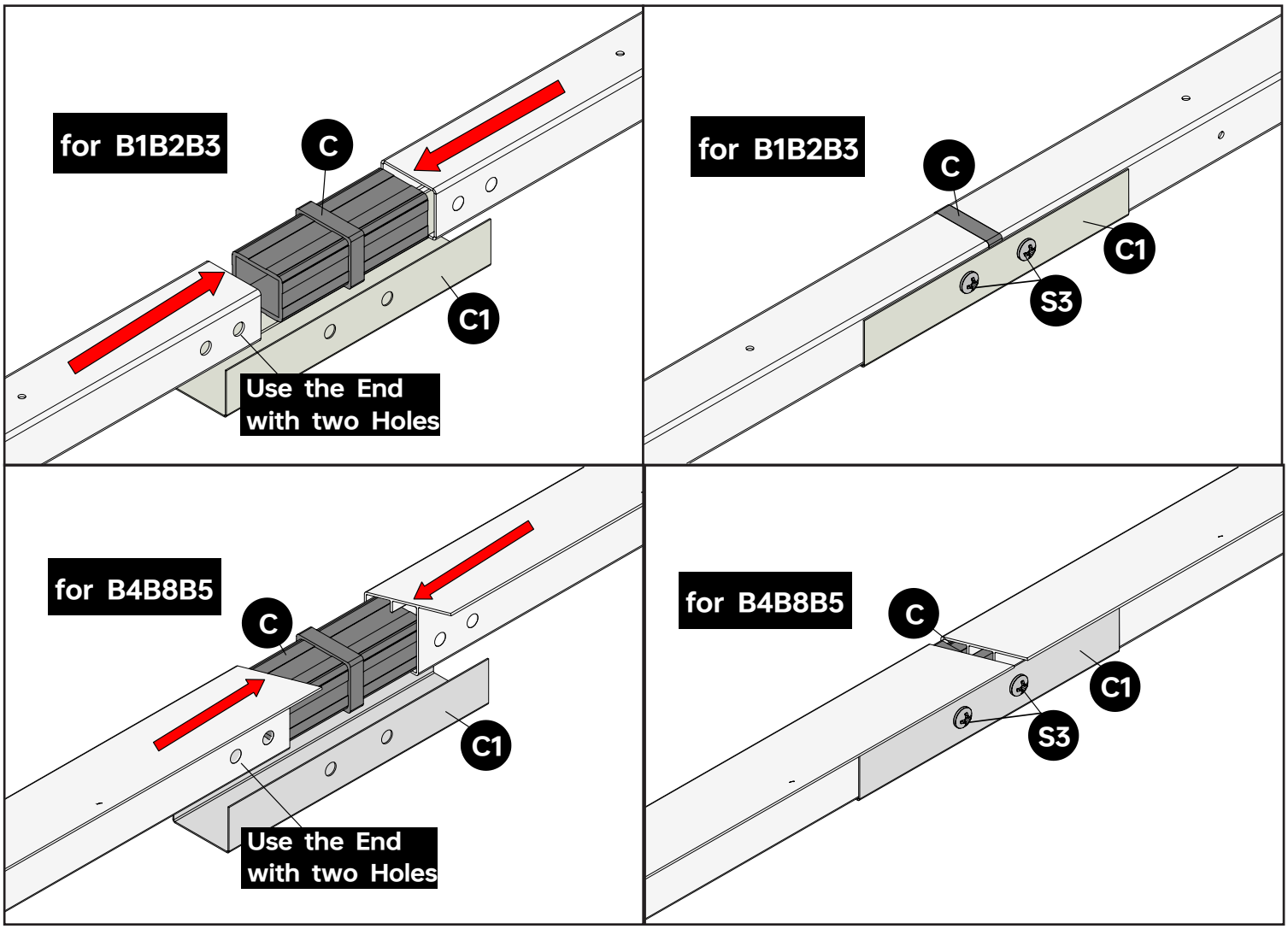

NOTE

Similar to step 1 in the base chapter, what's shown above is the only correct layout of connecting B1B2B3 and B4B8B5.

When connecting, use the end of B1~85 with two screw holes.

For C1, only use the two screws on one side. The two screw holes on the other side will be used later.

3

Part	Qty
B	4
S3	8

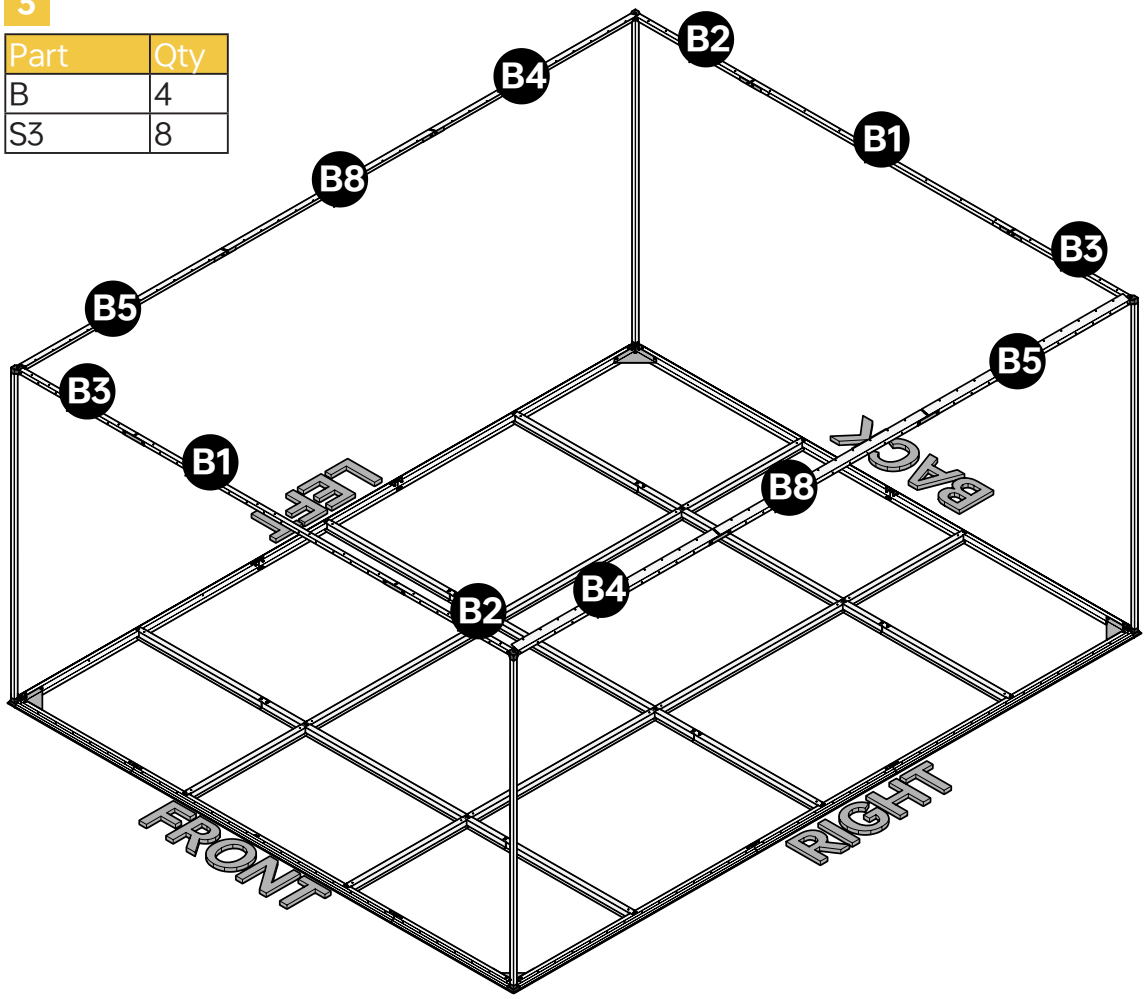

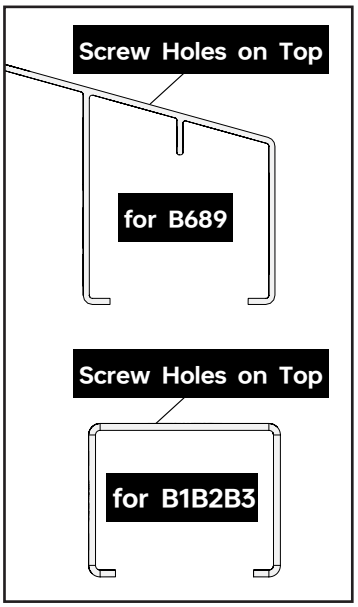

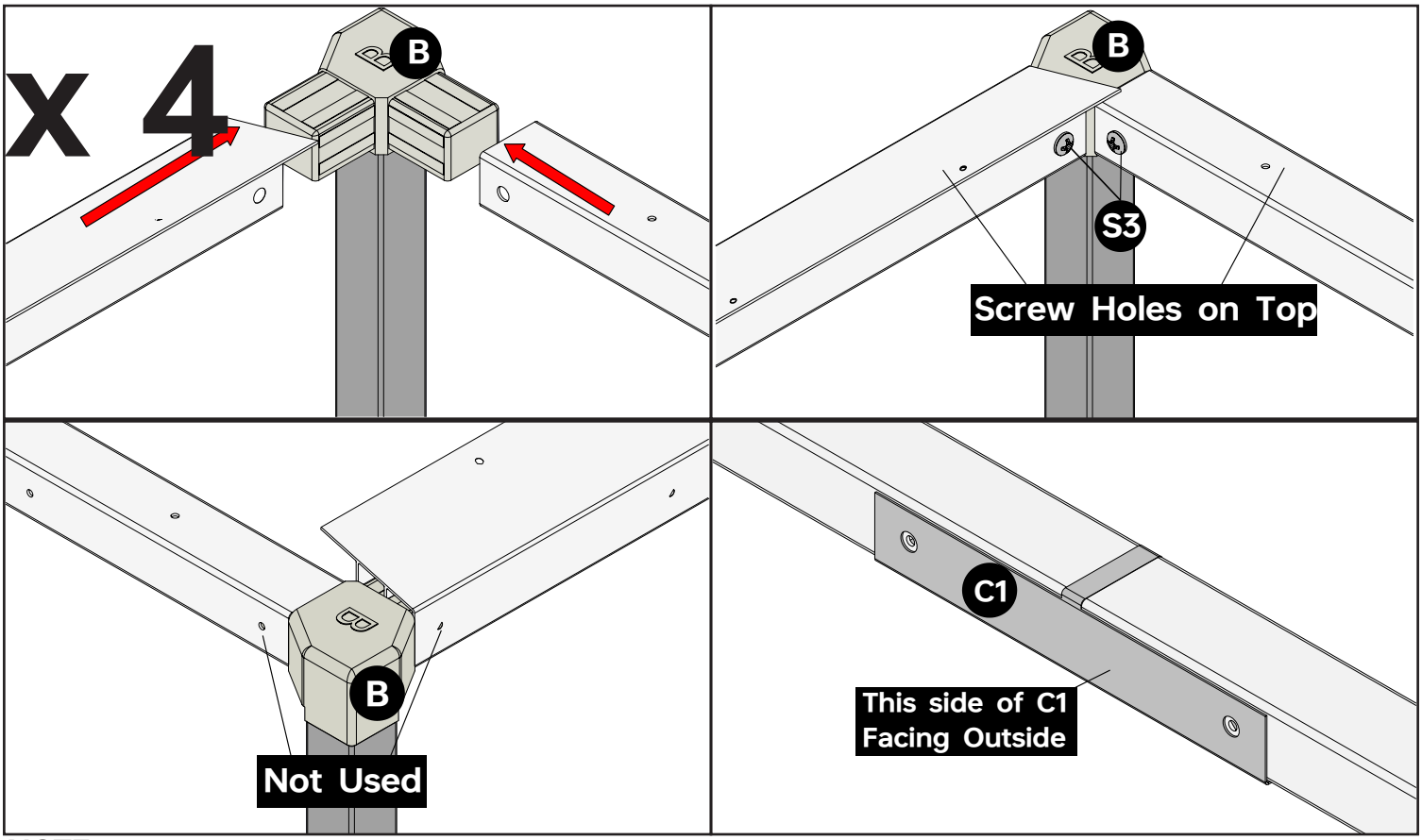

NOTE

When positioning B1~B8, make sure that the sides with no screws on C1 are facing outside and screw holes on top of B1~B8 are visible to you.

For part B, do not use the two screw holes that are facing outside.

4

Part	Qty
Q2	4
S3	24
S4	24

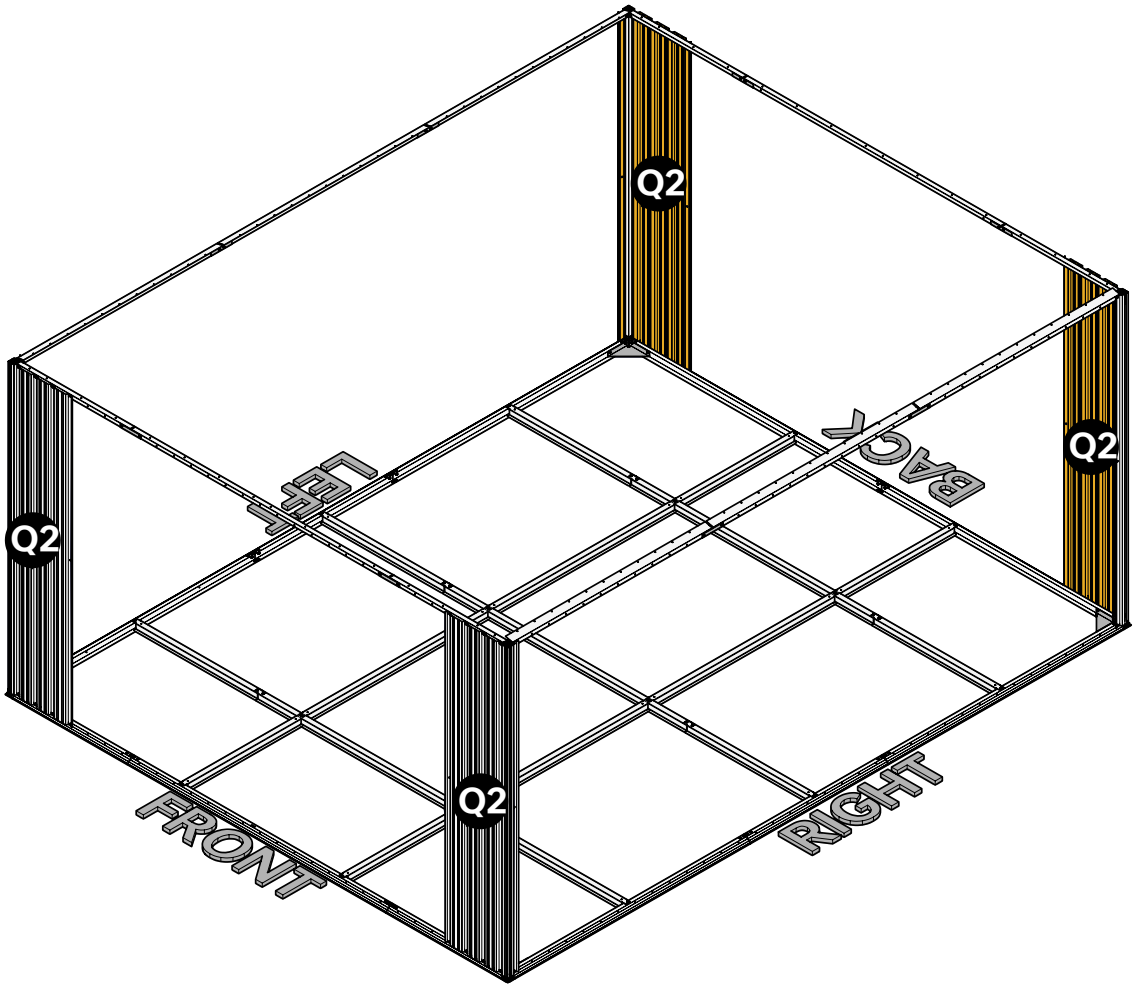

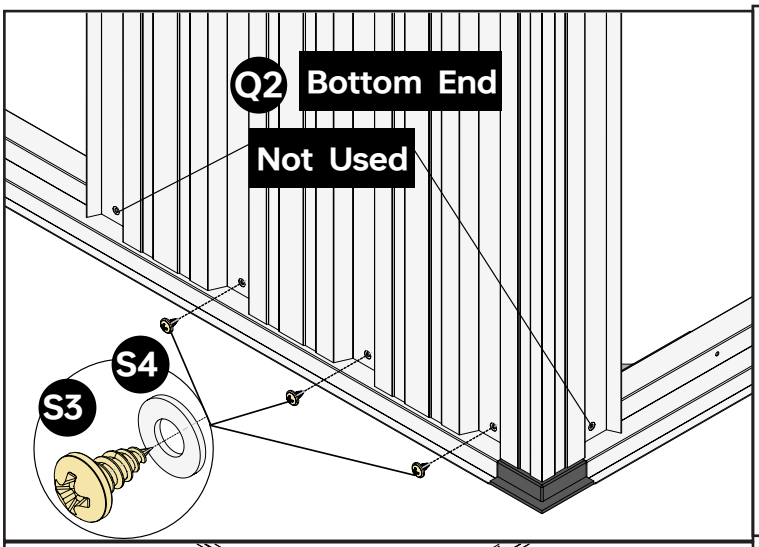

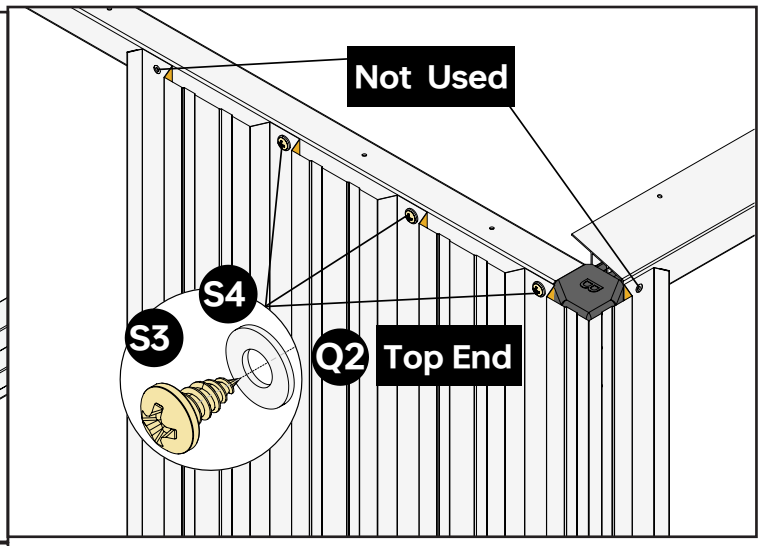

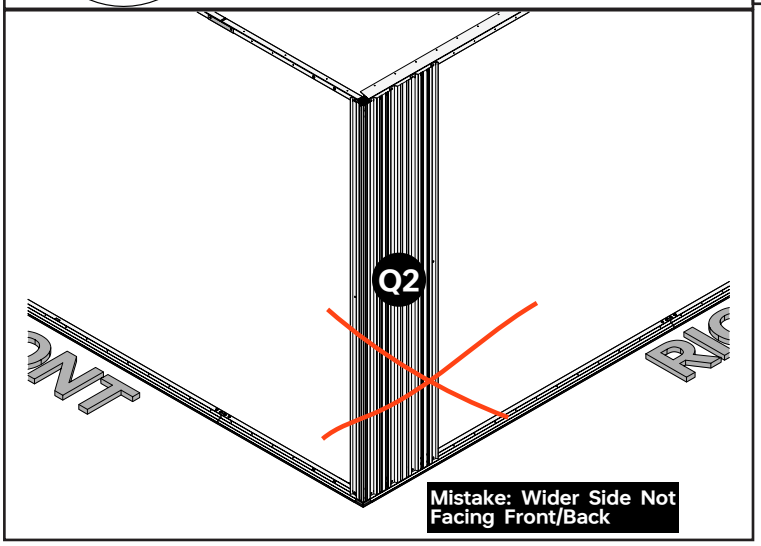

NOTE

When attaching Q2 to frames, make sure the wider side of the panel is facing front/back.
The screw holes closer to the edge of each Q2 are not used in this step.

ABOUT THE PLASTIC WASHER S4

Use S4 with S3 to protect panels and rainproof the shed.

5

Part	Qty
Q1	5
Q3	5
S3	72
S4	72

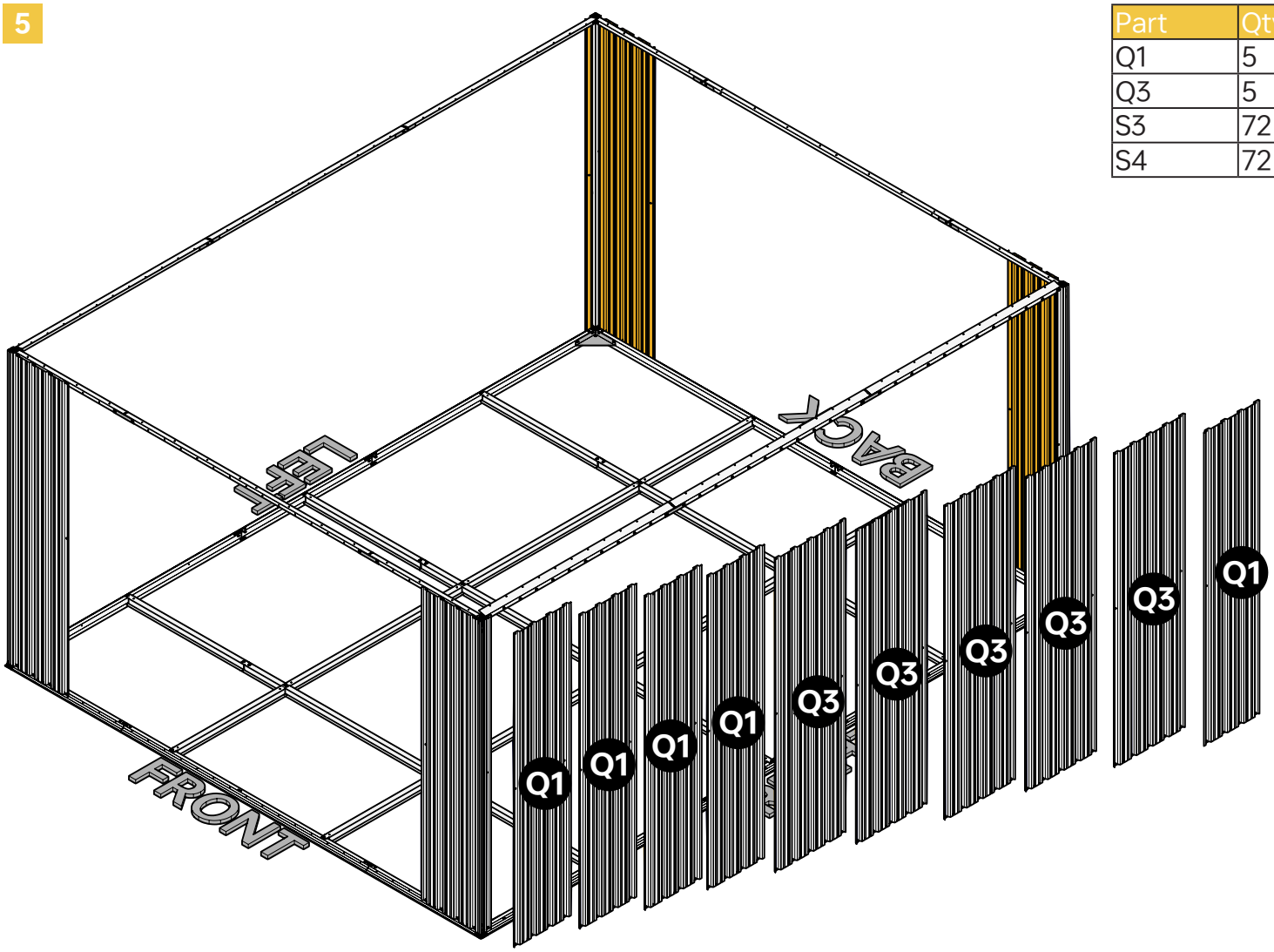

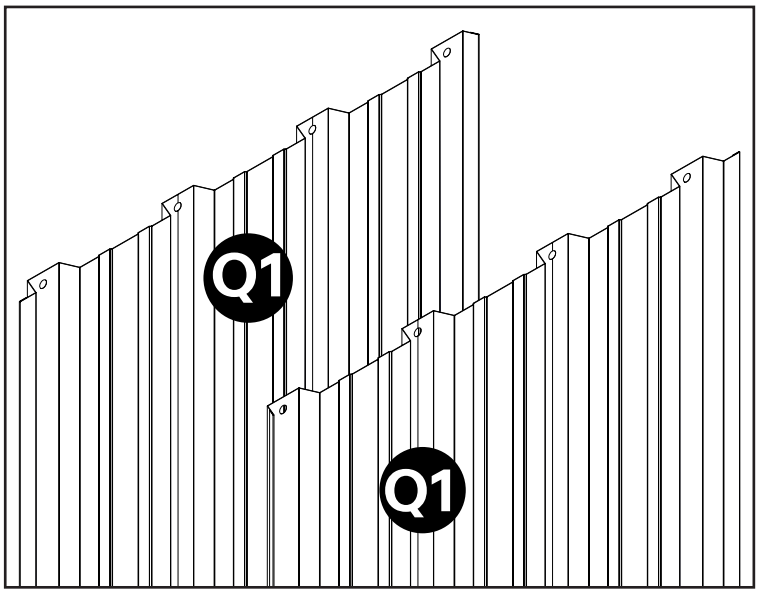

This is to avoid cluttering the manual with unnecessary drawings.

NOTE

WALL PANEL ASSEMBLY: Q1 AND Q3
For wall panel Q1, refer to the illustration on the left for two valid setup options. Don't worry about which end is up—Q1 works either way. Panel Q3 is symmetrical, so top and bottom ends are interchangeable as well.

QTY OF HOW MANY SCREWS WILL BE USED
From this step, the quantity of S3+S4 screws to be used on wall panels will not be shown in the illustrations. It will still be shown in the part/qty table.

Continued on next page for this step.

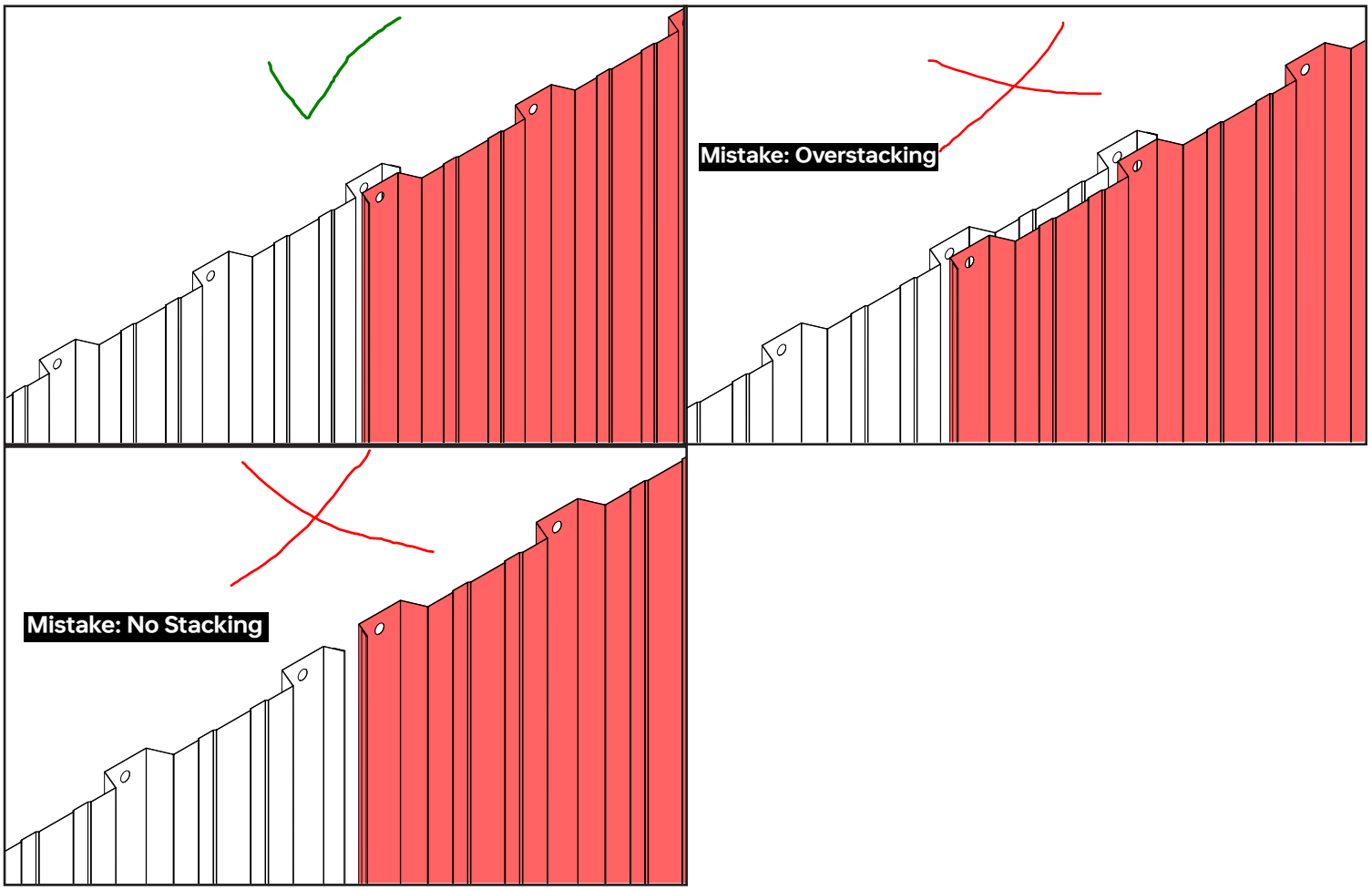

NOTE

ABOUT STACKING PANELS
The illustrations above demonstrate how to stack two panels. Note that, it does not matter which panel is layered on top.

IDENTIFYING THE INTERIOR AND EXTERIOR SIDE OF PANELS
Each panel of your shed comes with two distinct sides:
Interior Side: This side is always light gray, providing a uniform look inside your shed, regardless of the exterior color you choose.
Exterior Side: This is the side that showcases the color you selected for your shed, facing outward.

6

Part	Qty
Q1	2
Q3	4
S3	46
S4	46

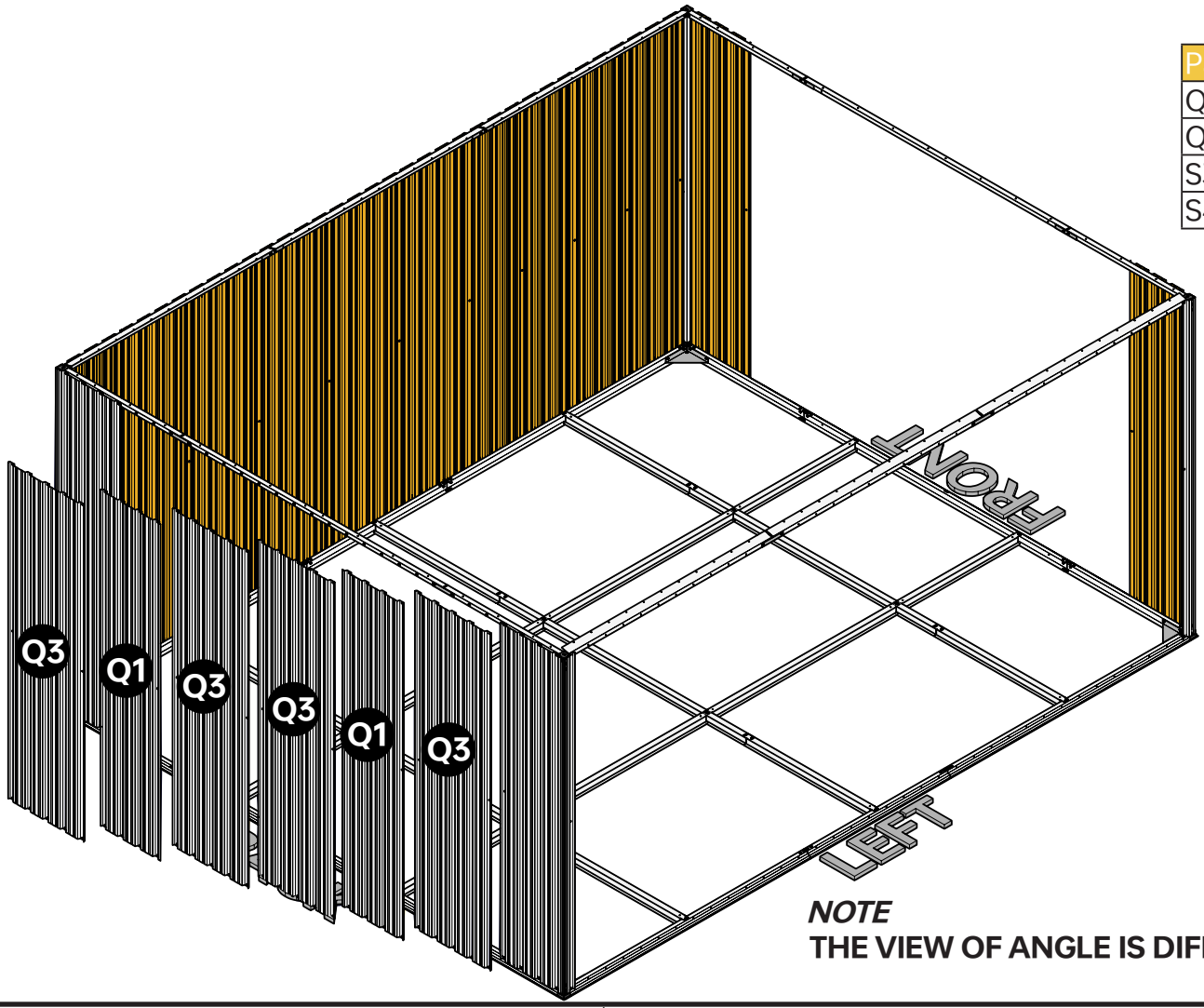

NOTE
THE VIEW OF ANGLE IS DIFFERENT.

7

Part	Qty
Q1	5
Q3	5
S3	72
S4	72

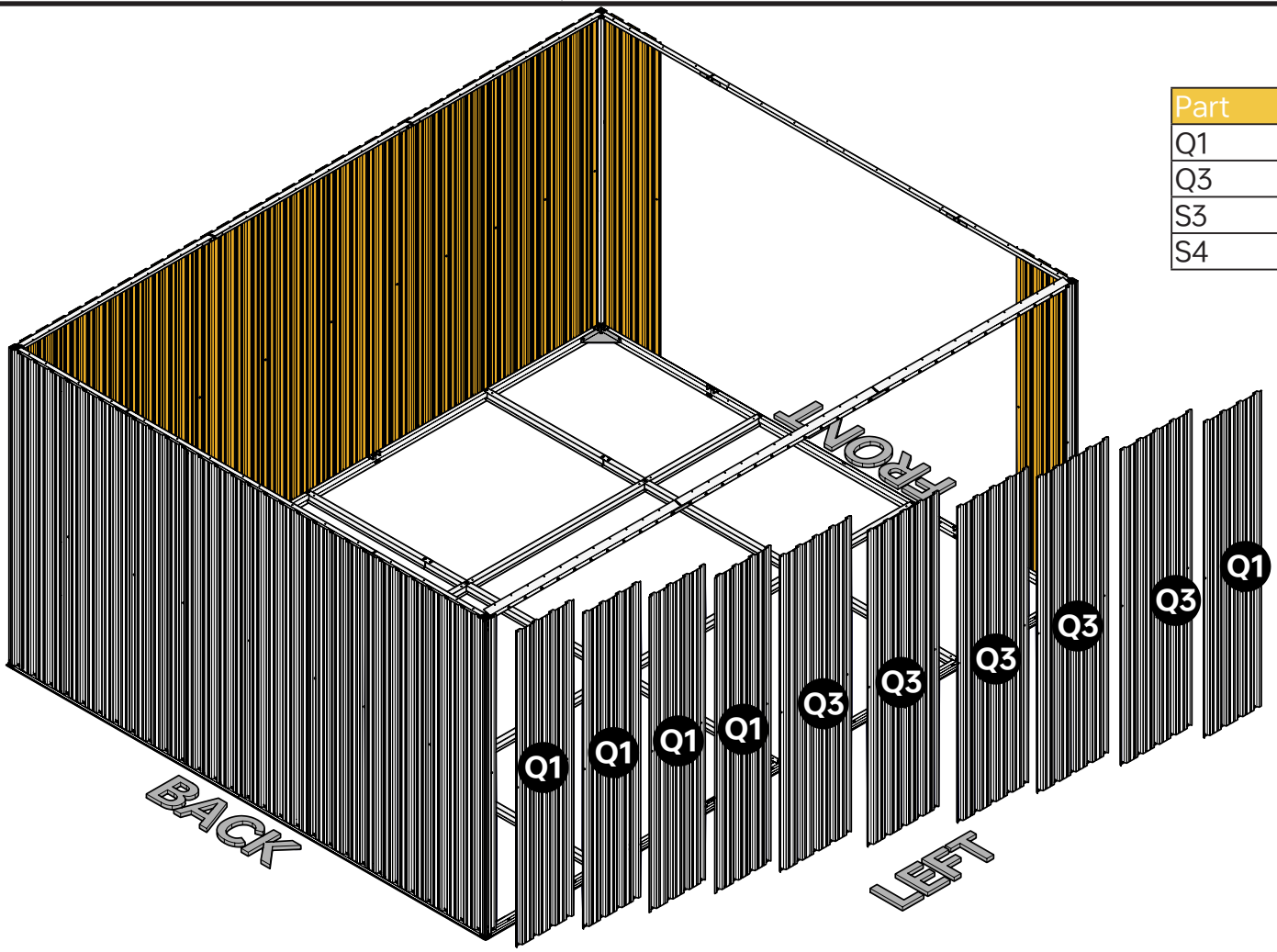

8

Part	Qty
Q3	2
LL	1
LR	1
S3	26
S4	20

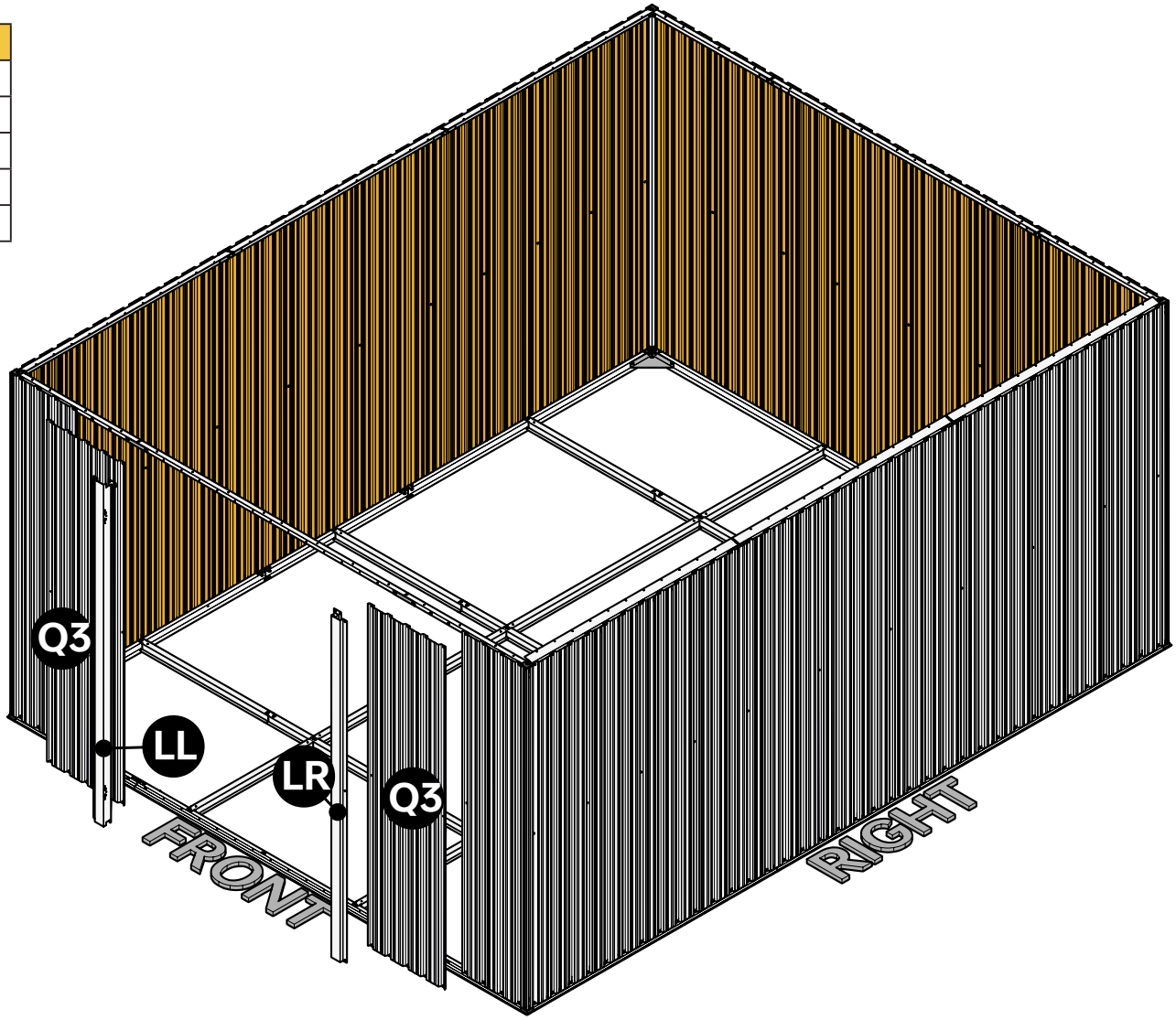

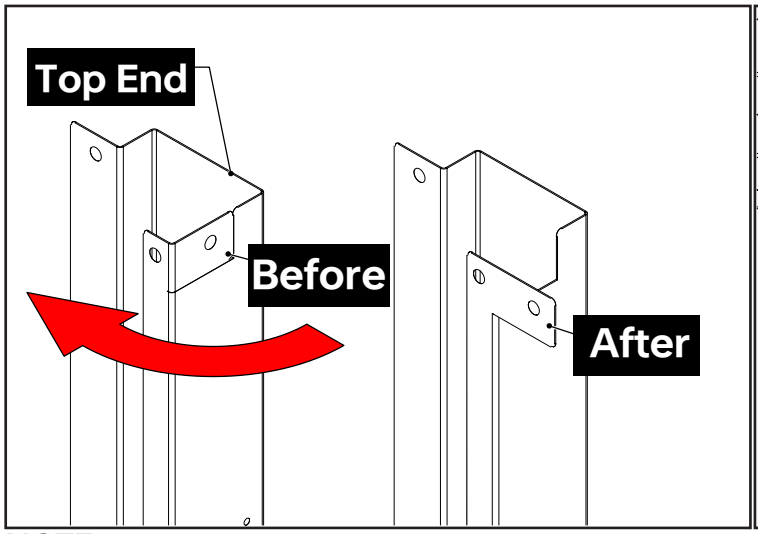

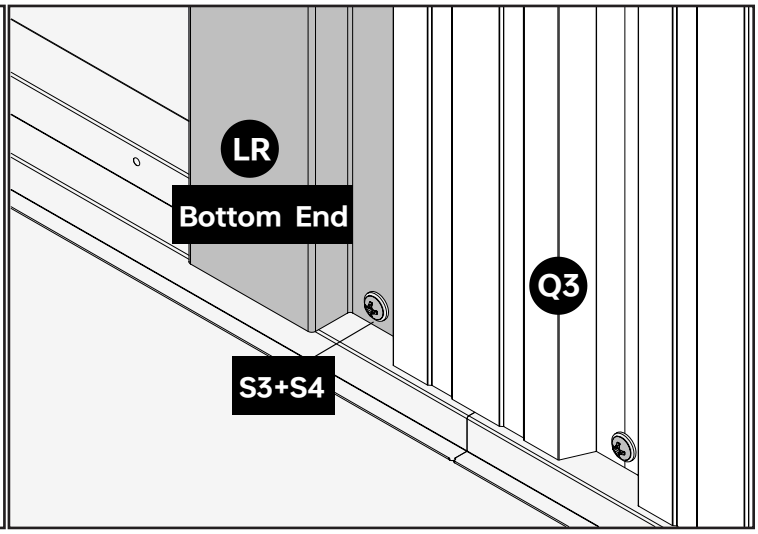

NOTE

LL and LR are stacked on top of Q3.

LL and LR have a top and bottom end. Do not mix them up.

Before using LL and LR, use a plier to bend the top end. This can also be done using your hand. Make sure your work gloves are solid enough.

In this step, we will only show how to attach LR to the shed but the steps are the same for LL.

Continued on next page for this step.

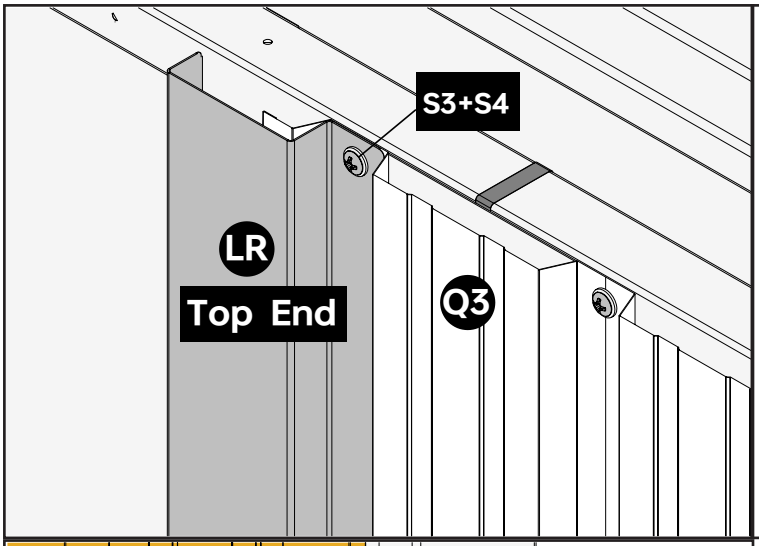

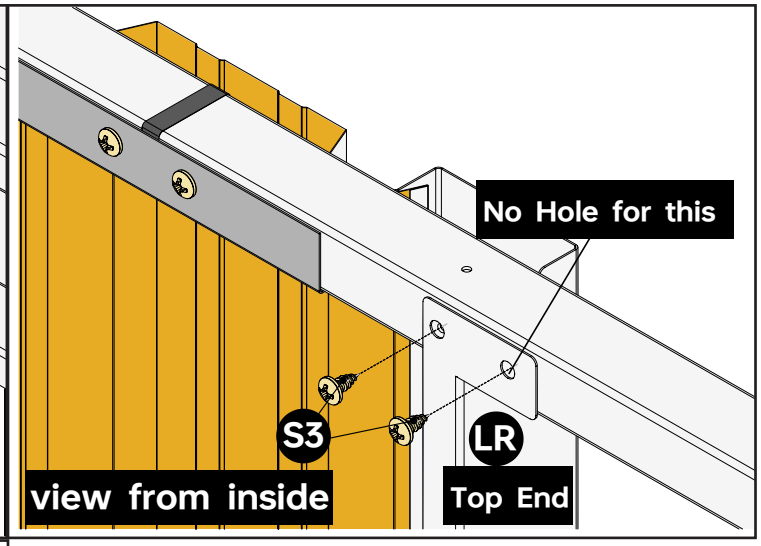

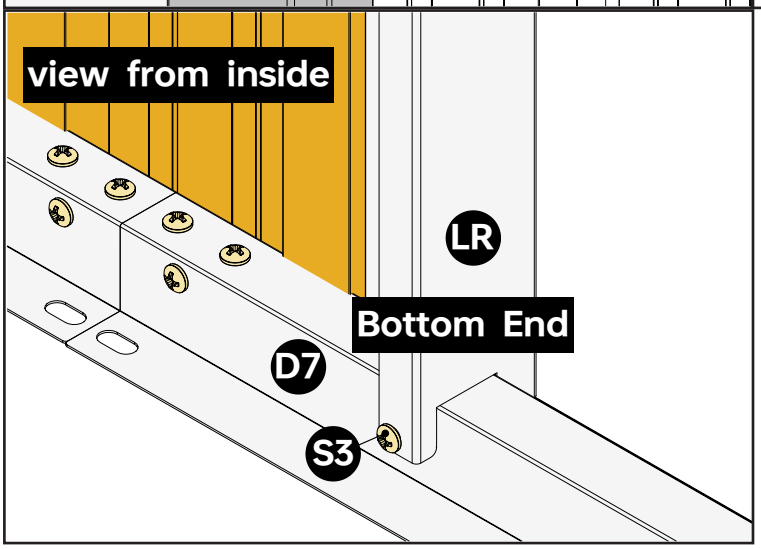

NOTE

When attaching LL and LR, you will have to go inside the shed, and find the three screw holes on LL and LR.

Note that, you will not find a screw hole on B1+B2+B3 frame that is corresponding to the screw hole on the bent part of LL and LR. This is a deliberate choice made by the designer. B1+B2+B3 frame is made of aluminum so you can still drive the screws into the them fairly easily.

Part	Qty
L1	1
L2	1
L3	1
L4	1
L5	1
L6	1
L7	1
S1	18
S2	18
S4	18
S5	18

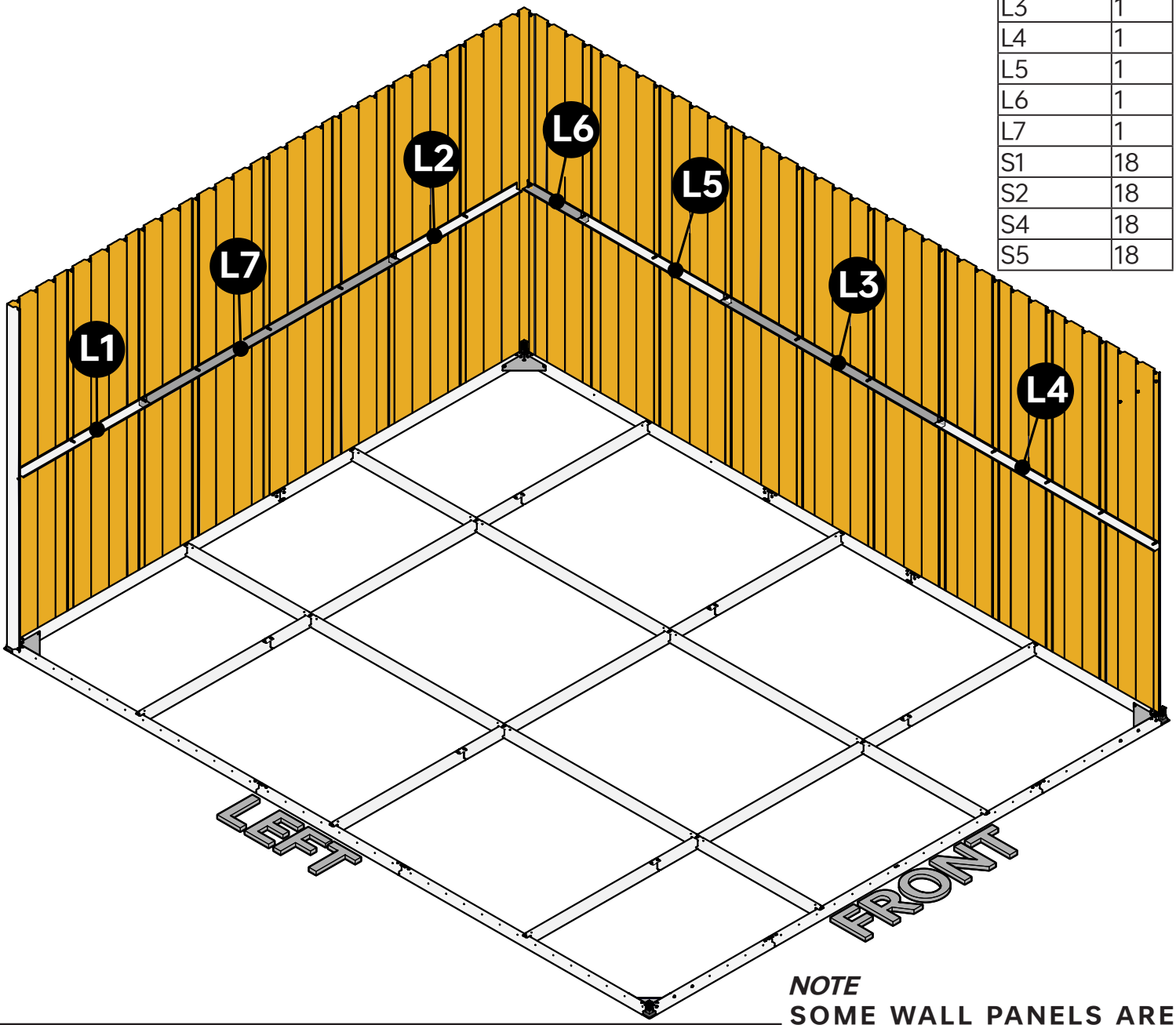

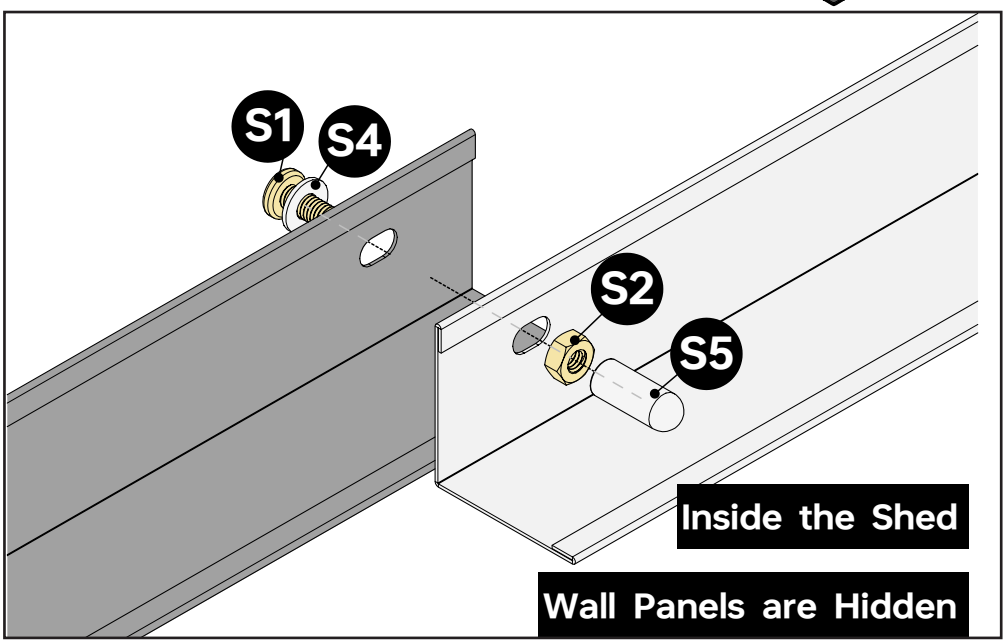

NOTE

SOME WALL PANELS ARE HIDDEN IN THIS STEP.

S5 is a plastic cap used with S1 and S3 to cover the pointy head of the screws. In this manual, we will outline some areas that we believe S5 is needed, but there are more S5 in the package than necessary.

The illustration on the left shows how L parts are stacked together. To improve readability, wall panels are hidden. Continued on next page for this step.

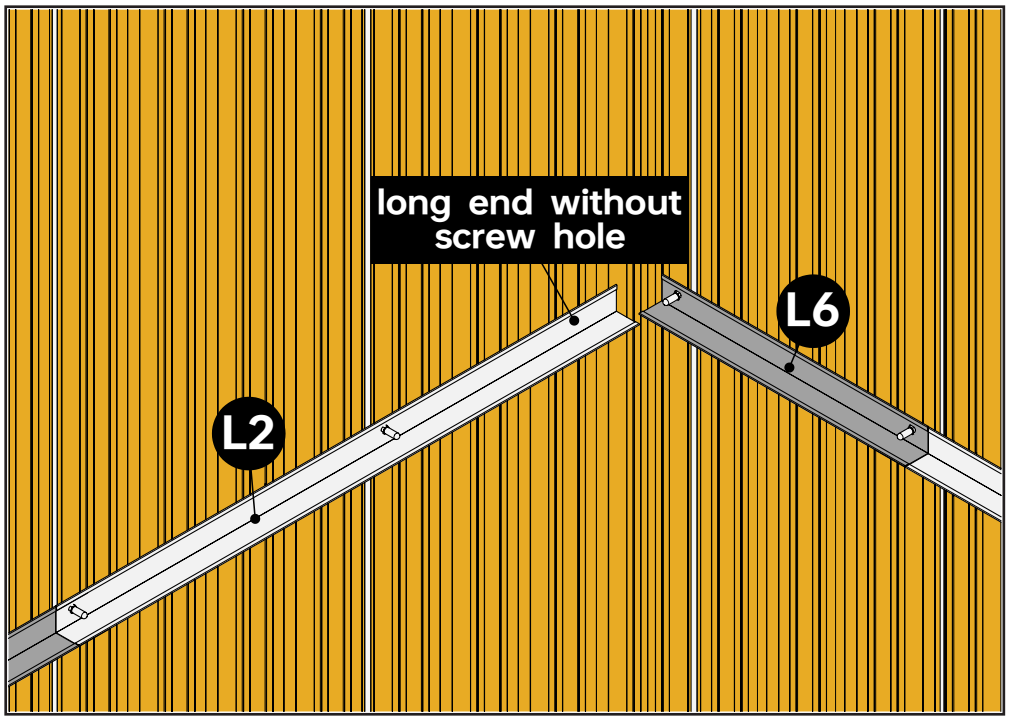

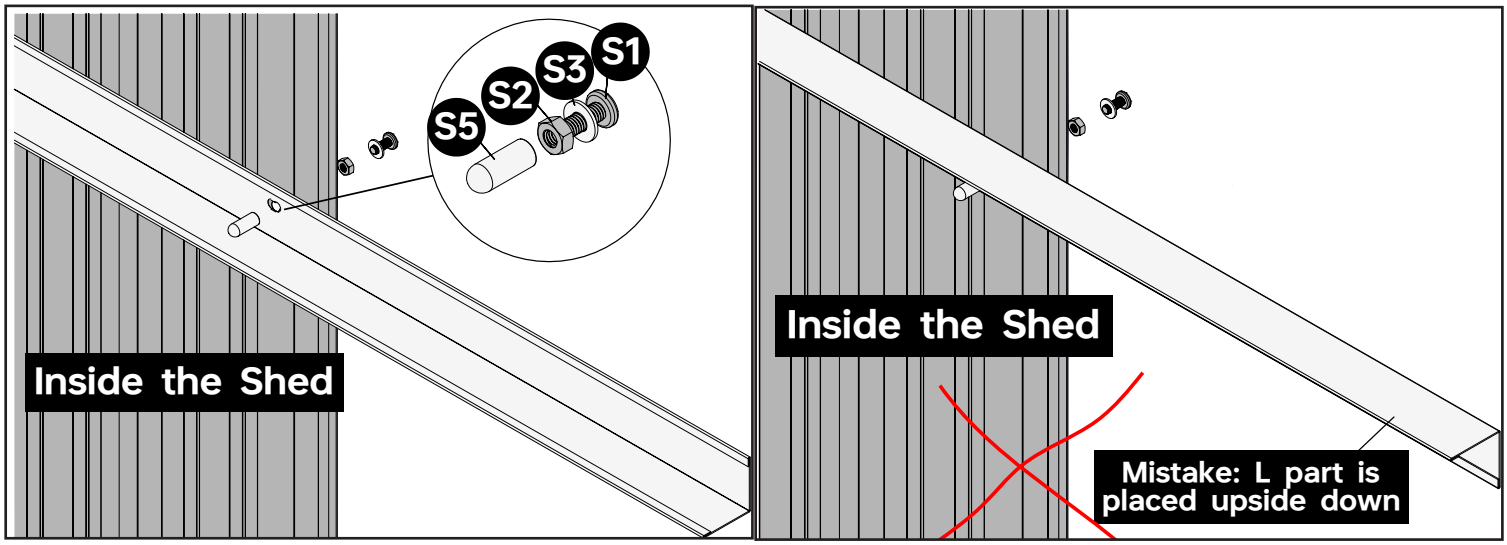

NOTE

The screw holes on L parts are corresponding to the screw holes on wall panels W1~W3. As a result, some L parts, like L2, have a rather long end that has no screw holes on it.

Note how the L part is placed.

Part	Qty
L1	1
L2	1
L3	1
L4	1
L5	1
L6	1
S1	15
S2	15
S4	15
S5	15

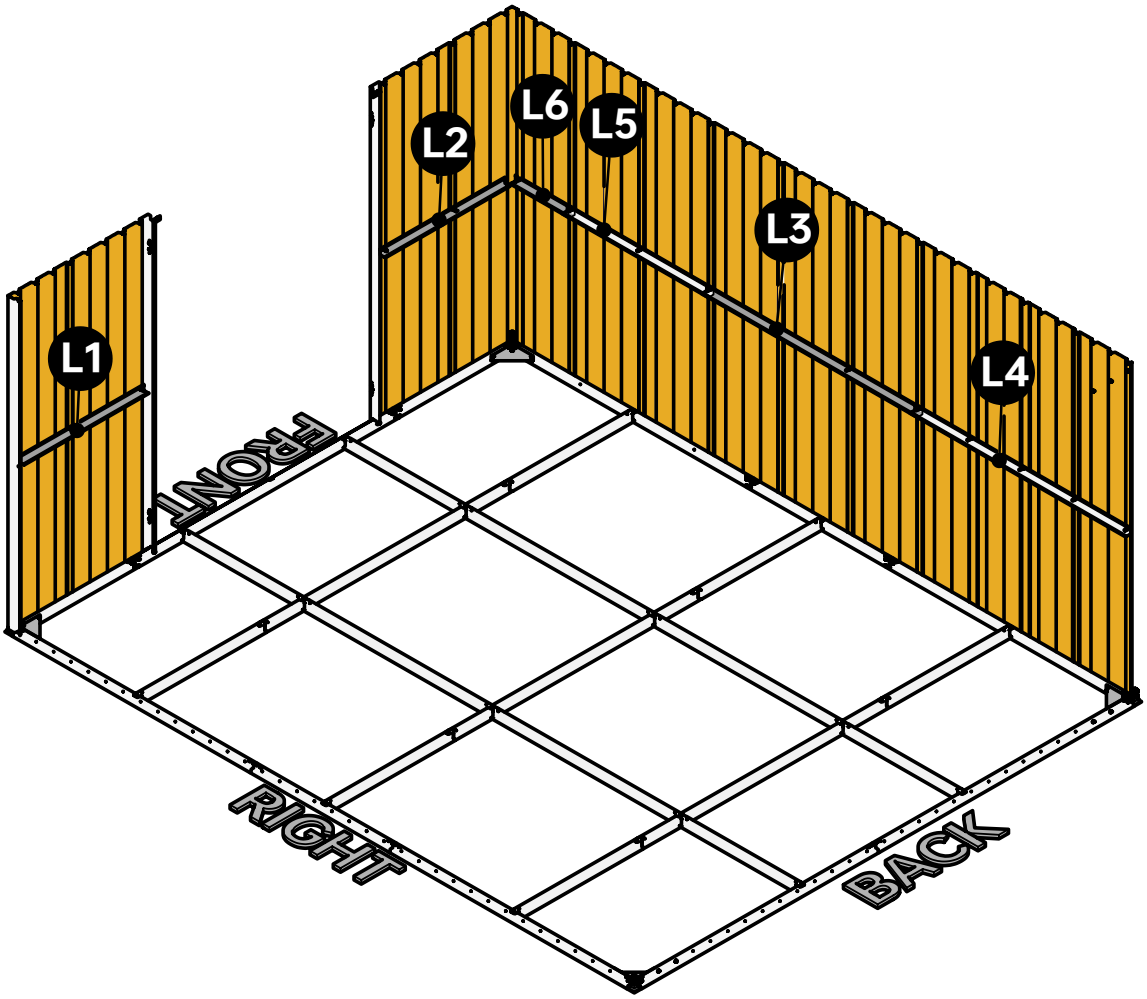

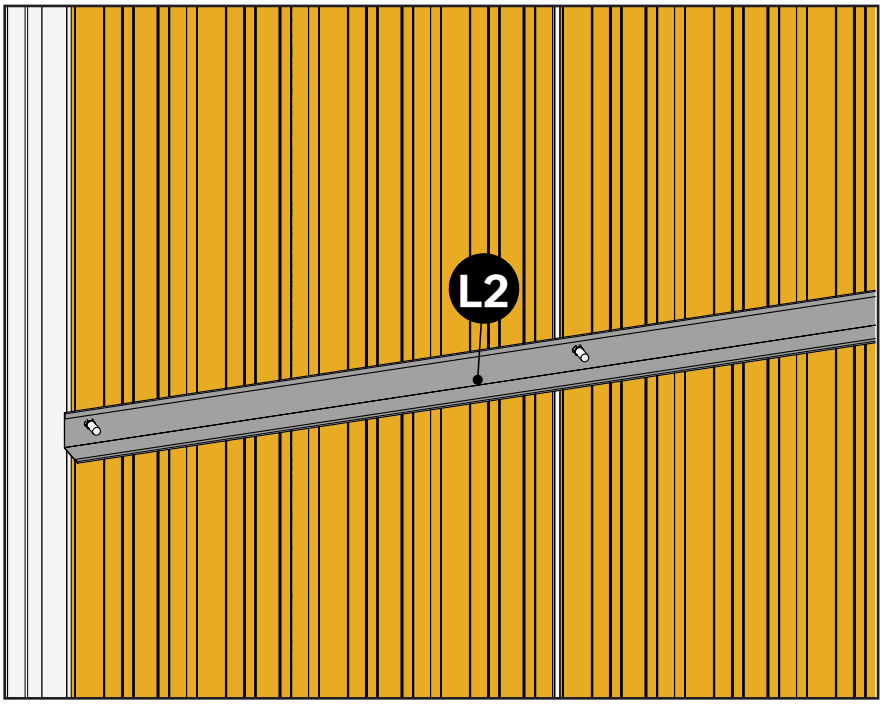

NOTE
SOME WALL PANELS ARE HIDDEN IN THIS STEP.

For this step, the view angle is changed. Note that for L1 and L2 placed in the front of the shed, they are used to connect LR/LL to the rest of the wall panels.

05 Roof

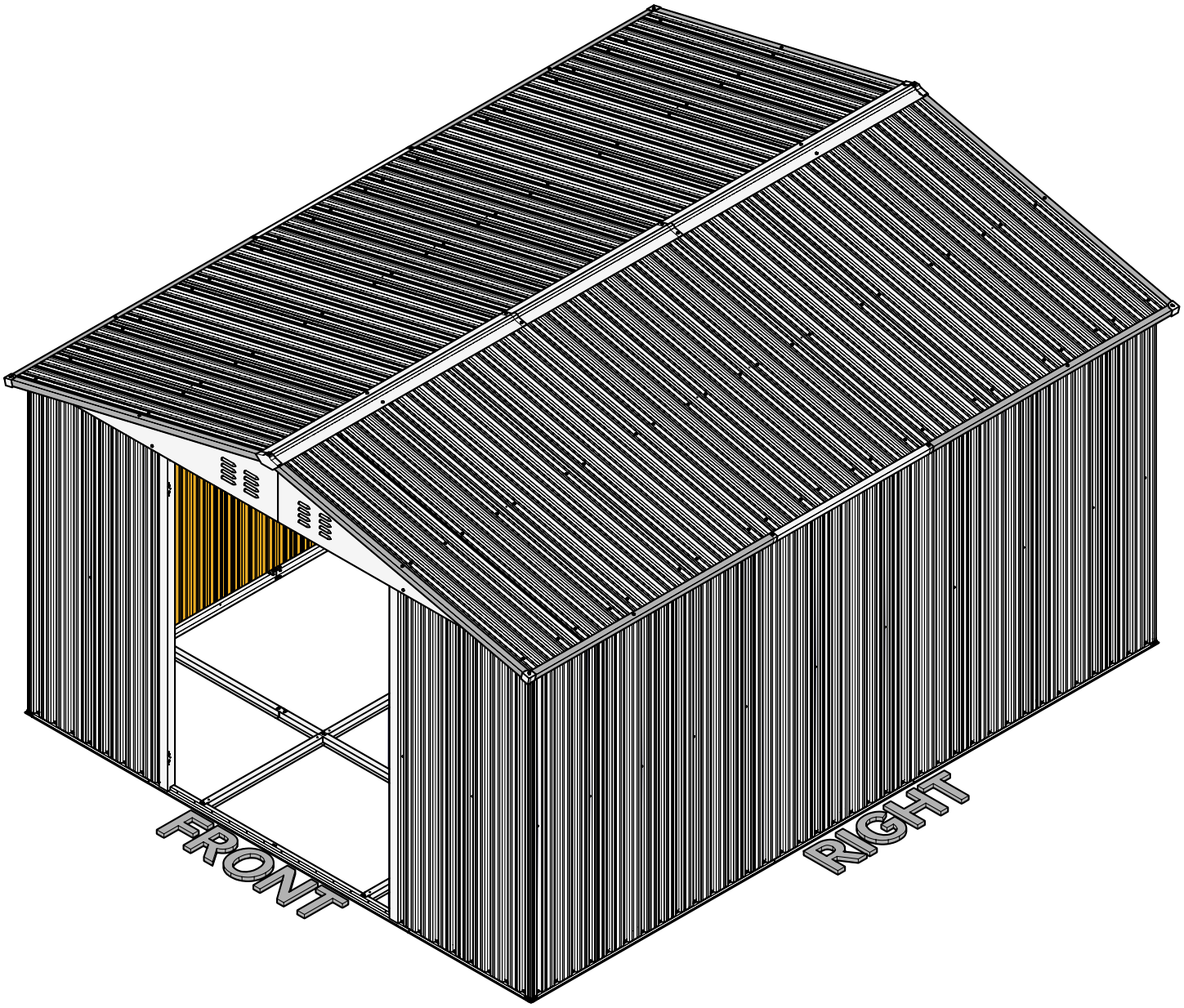

1

Part	Qty
SL	2
SR	2
J1	4
J2	4
S1	12
S2	12
S4	8

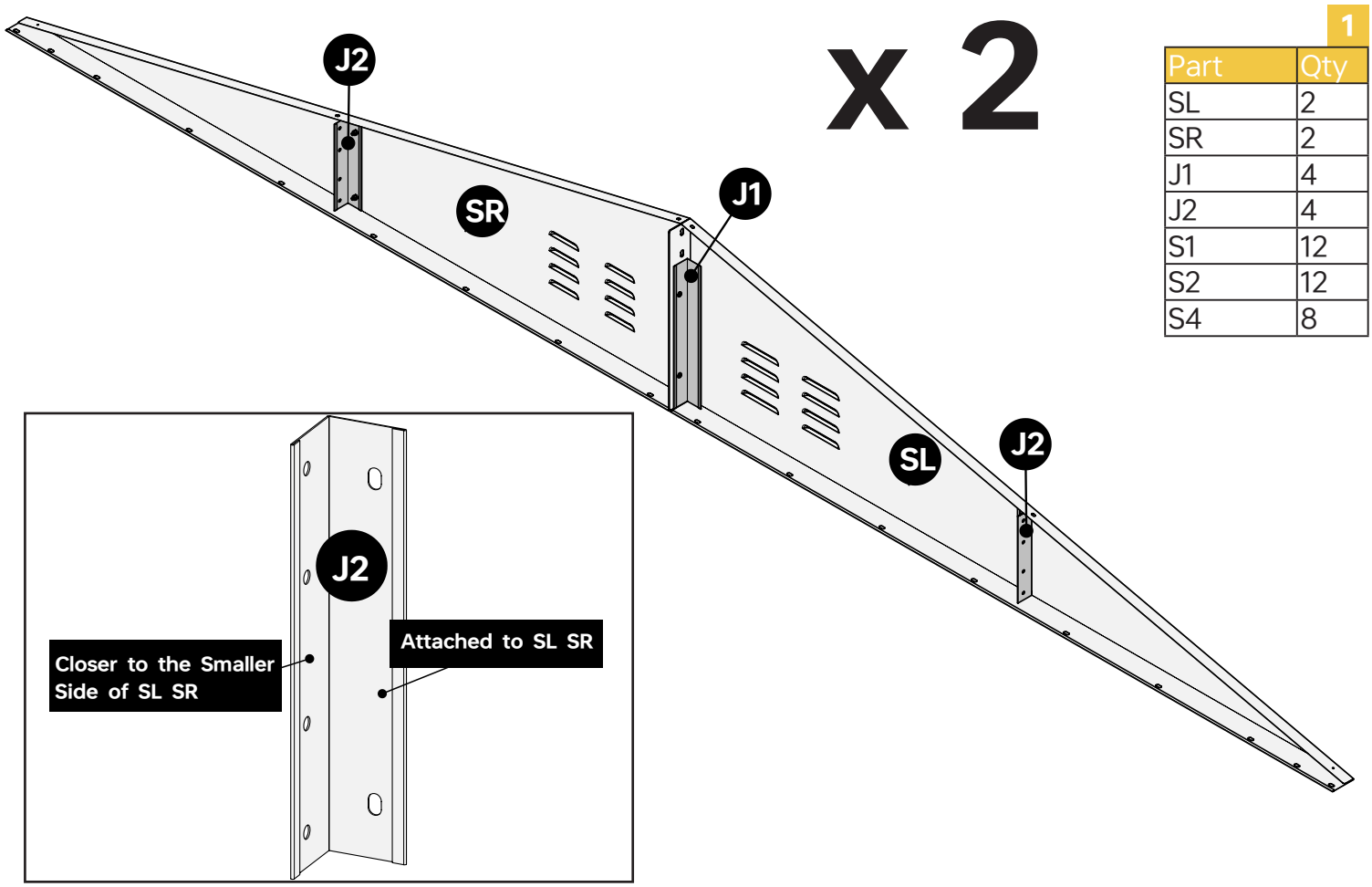

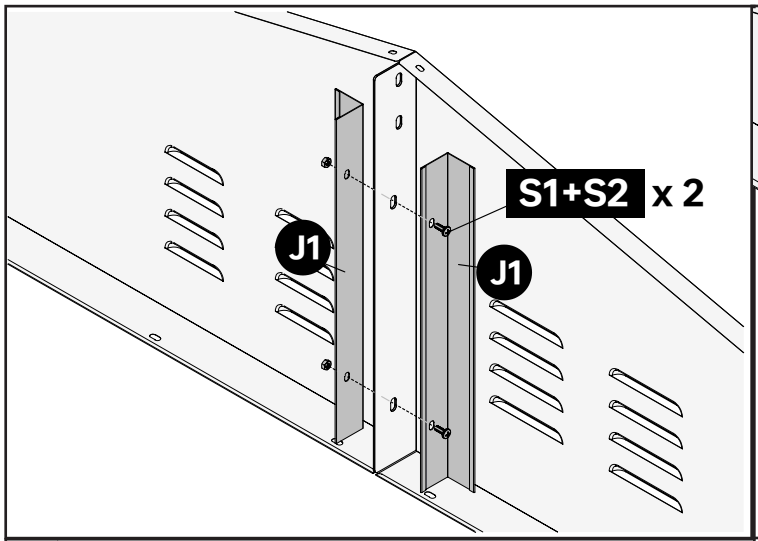

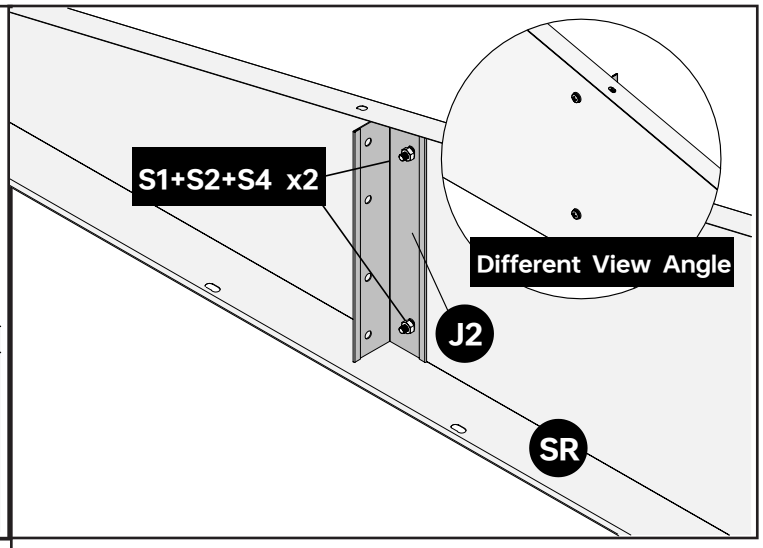

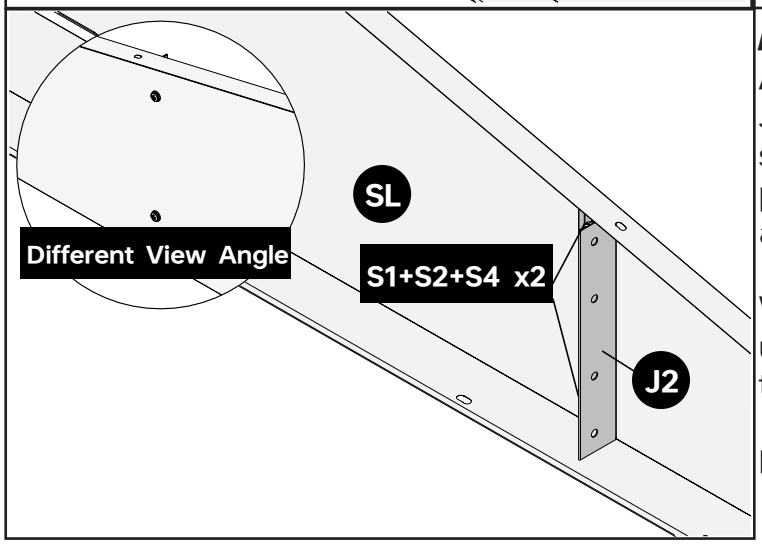

NOTE

ABOUT BRACKET J2

J2 has two different sides. When placing J2, make sure that the side with four smaller screw holes is placed closer to the smaller end of SR/SL, as shown above.

When attaching J1 to SL/SR, make sure that you are using the lower two screw holes on SL/SR and leave the top two unused.

Repeat this step so you have two sets of SL+SR.

2

Part	Qty
H1	2
H2	2
H3	2
HL	4
S7	32
S8	32

x 2

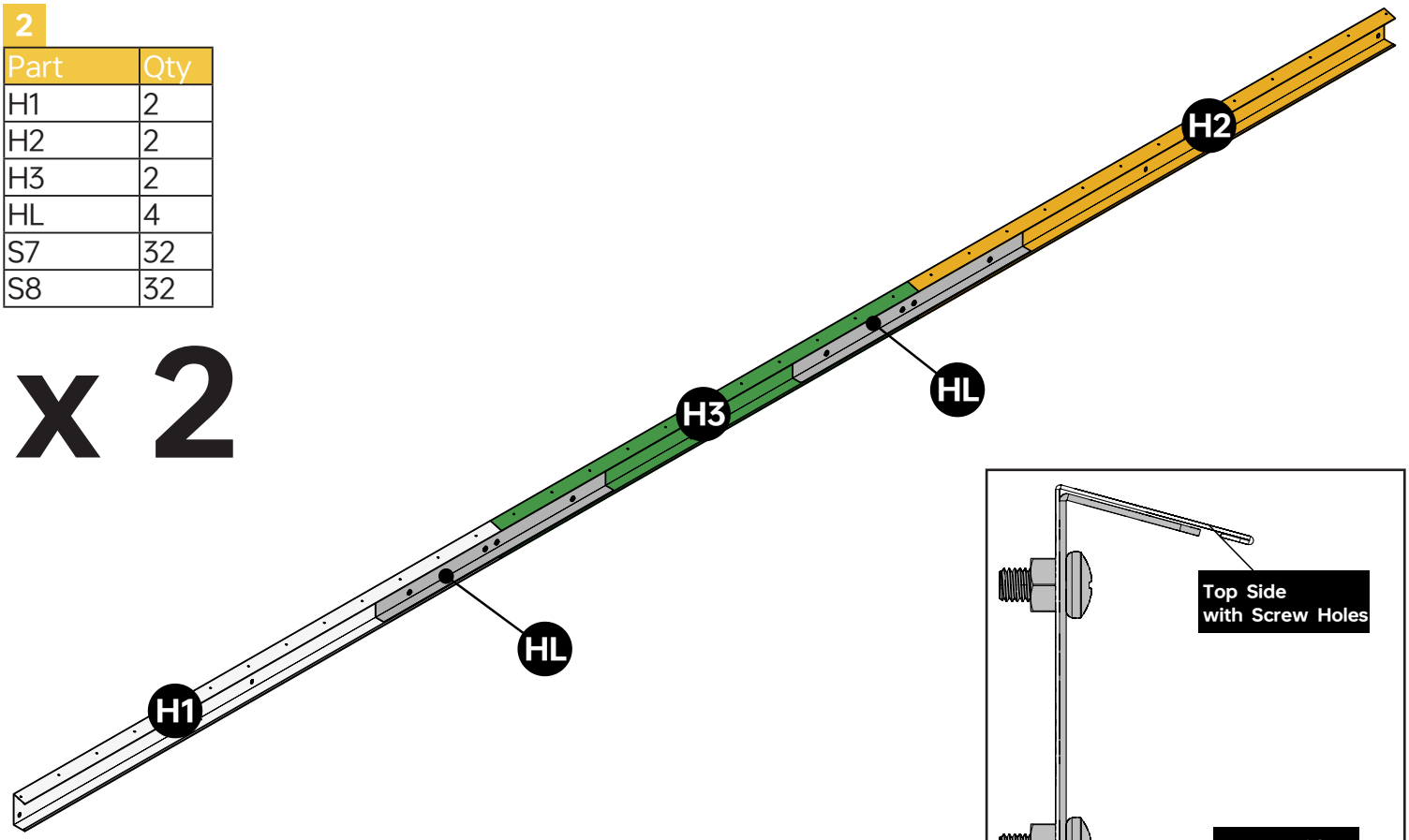

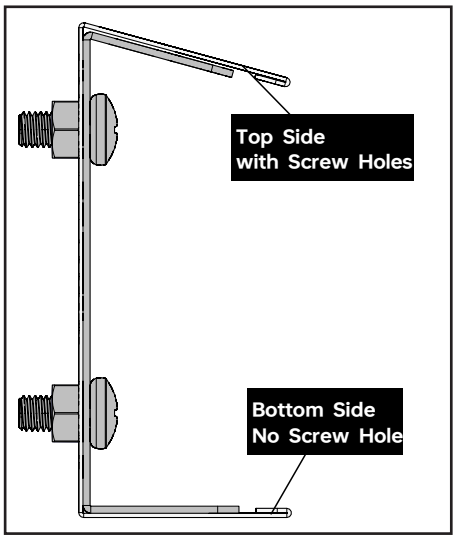

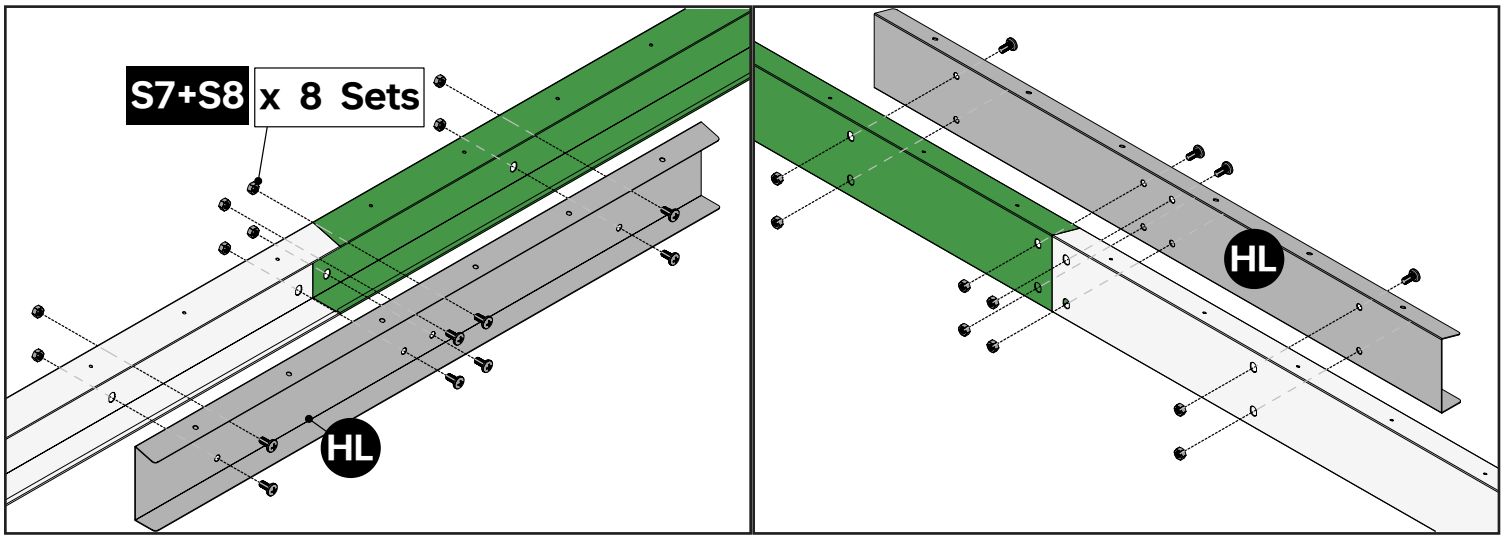

NOTE

H1H2H3 and HL have two different sides, the slanted side with screw holes are the top side, and the other side is the bottom side. The layout above is the only acceptable layout of H1+H2+H3.
Use S7+S8 to connect H1H2H3 and HL together.
Repeat this step so you have **TWO** sets of H1+H2+H3.

3

Part	Qty
H1	2
H2	2
H3	2
HL	4
S7	16
S8	16

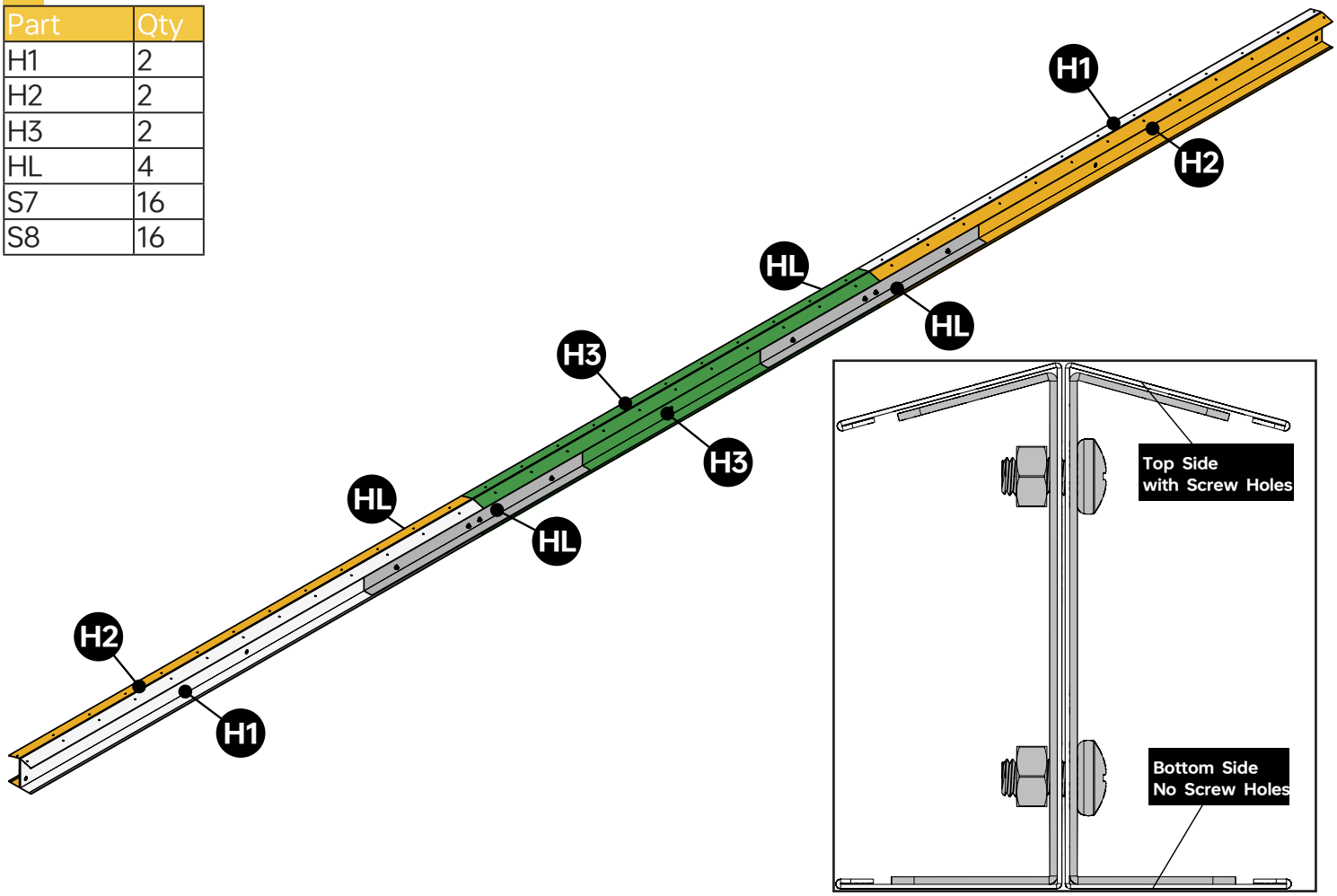

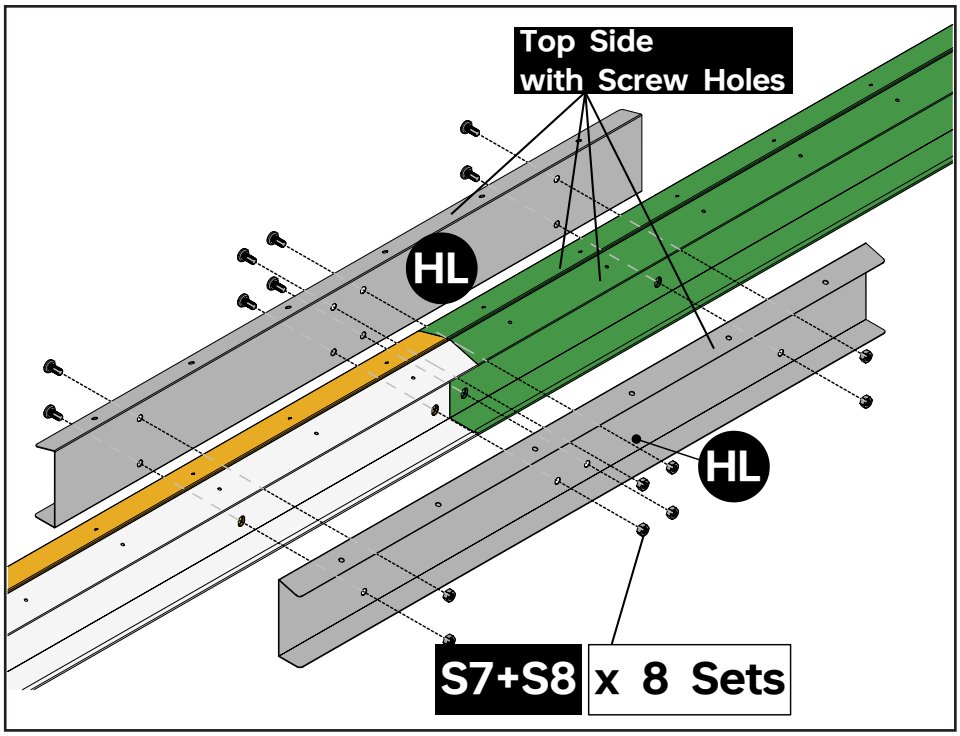

NOTE

Do not confuse this step with the last step. The H1H2H3 used here are the ones that are not used in last step. You do not need to dismantle the completed H1+H2+H3 structure.

4

Part	Qty
S3	36

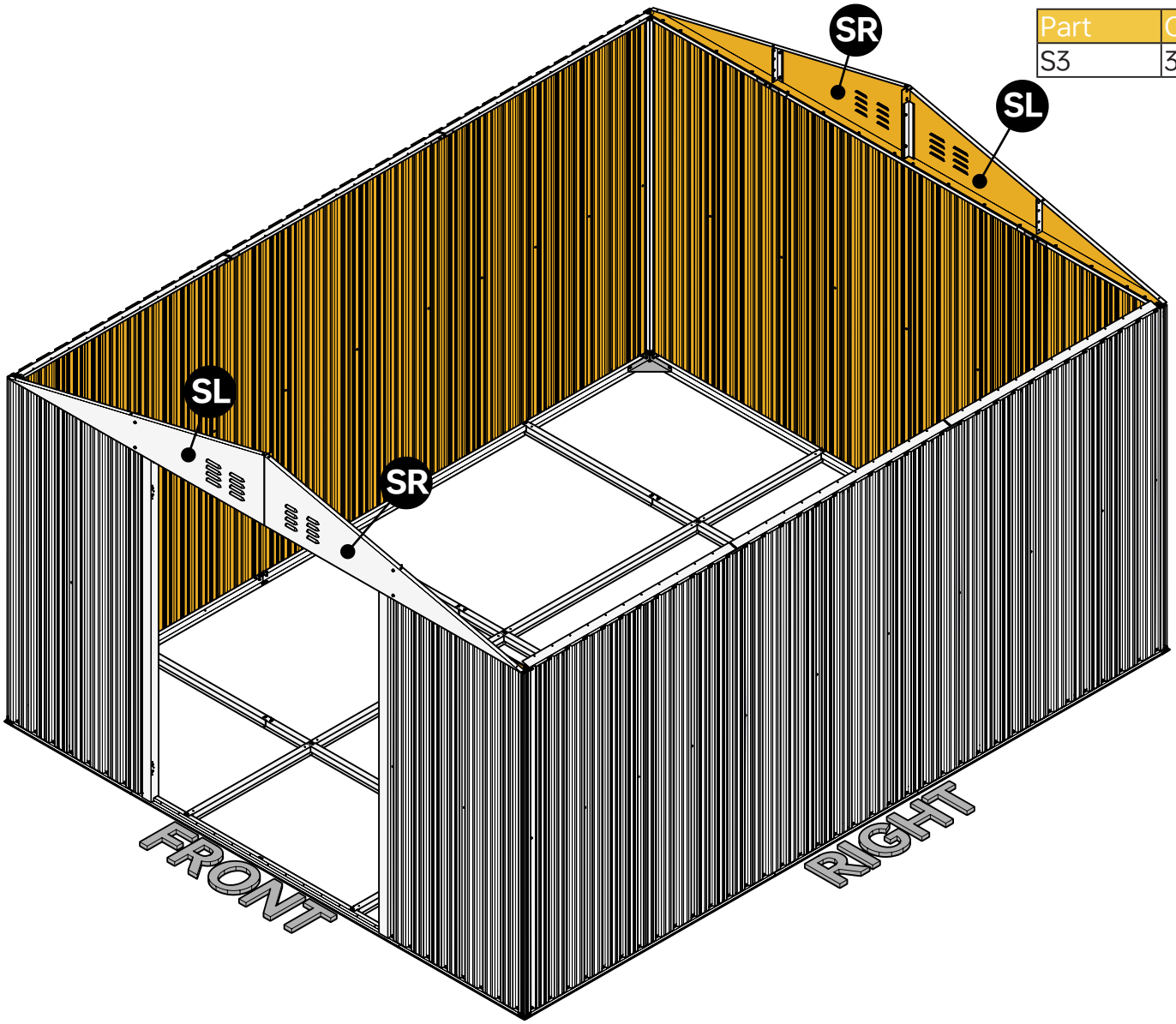

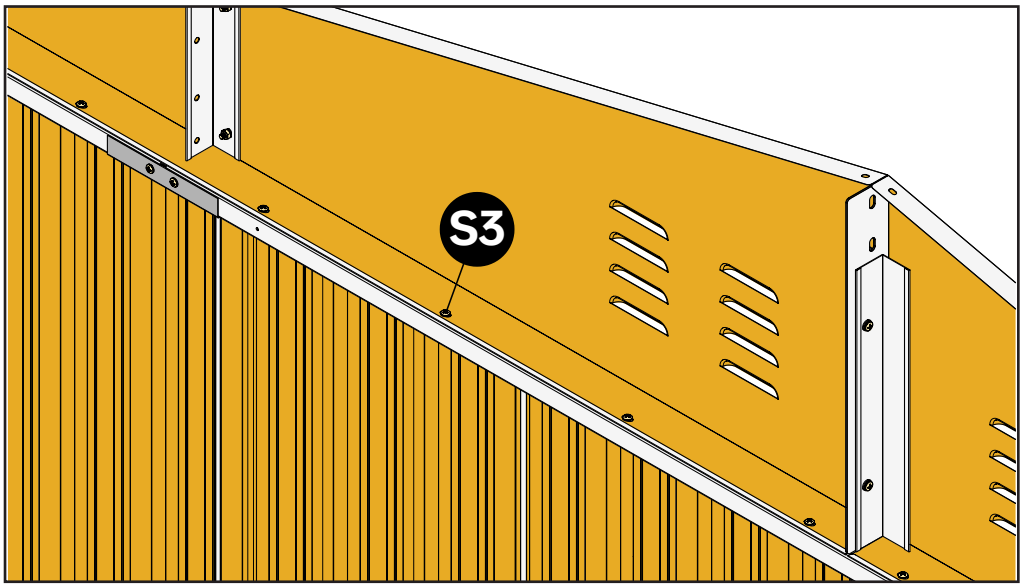

NOTE

Use 36 x S3 to secure one set of SL+SR to the fames. No S4 is needed.

5

Part	Qty
S7	12
S8	12

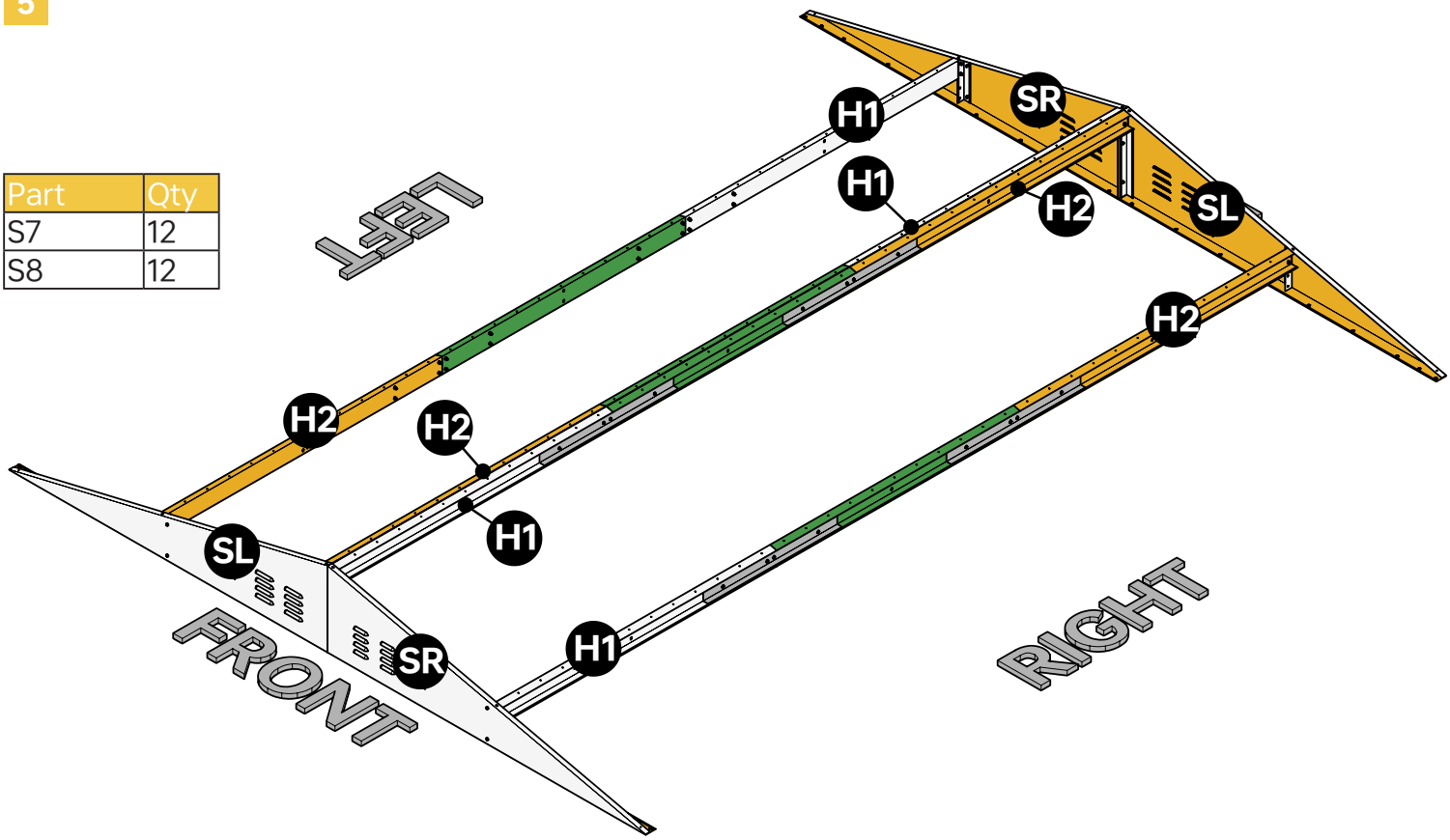

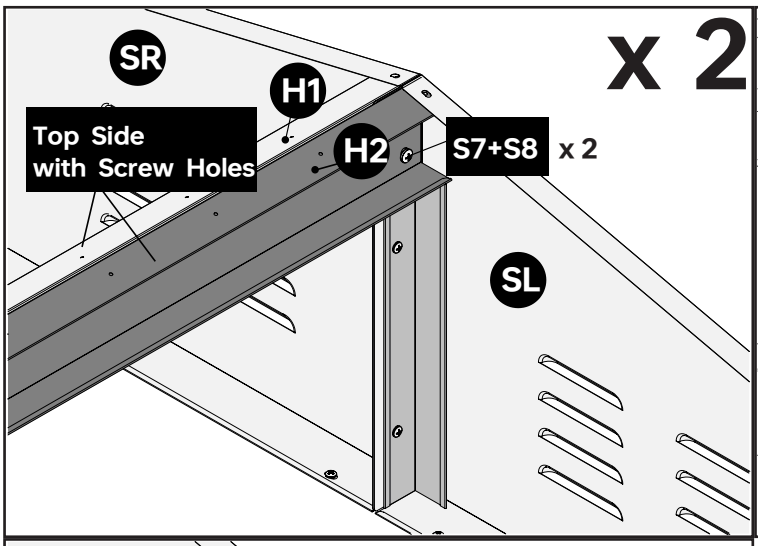

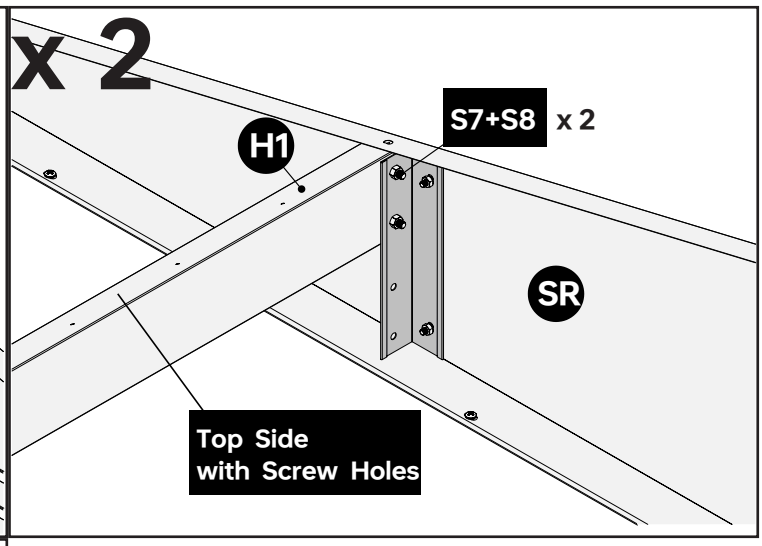

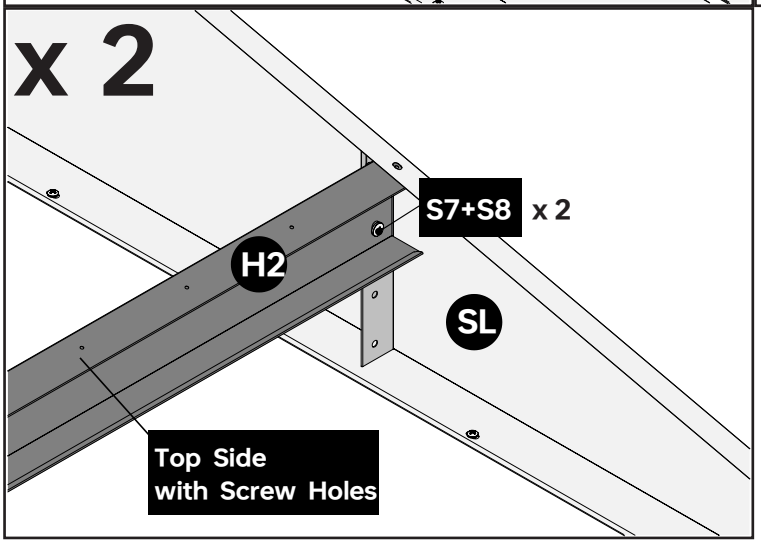

NOTE

Some rules to make this step smoother:

1) always attach H1 to SR and H2 to SL.
2) make sure the screw holes on H1+H2+H3 are on top.
3) use S7+S8 to secure H1+H2+H3 to J1 and J2.
4) use the top two screw holes on J2.

VISIBILITY

From this step, the wall and base part of the shed will not be shown. This is to increase the visibility of the roof panels.

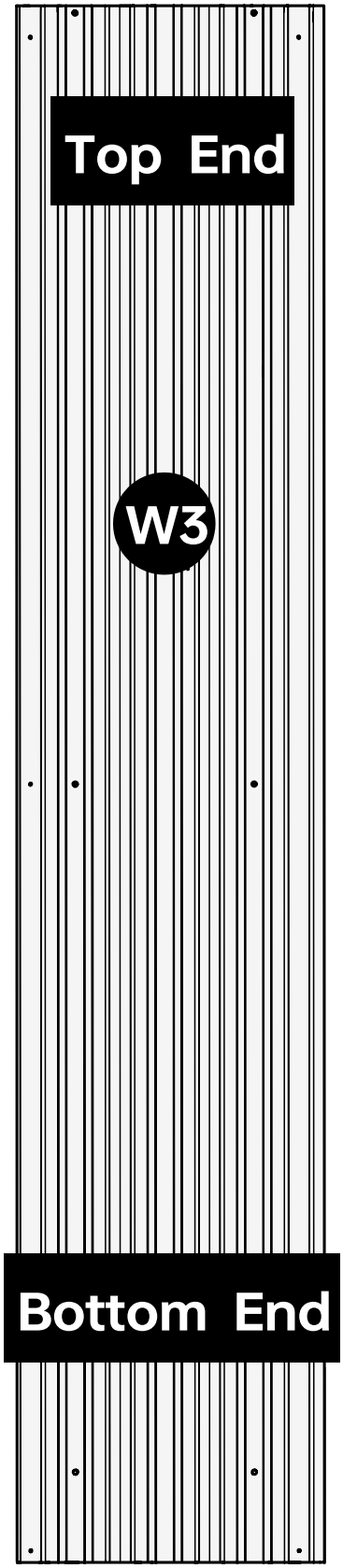

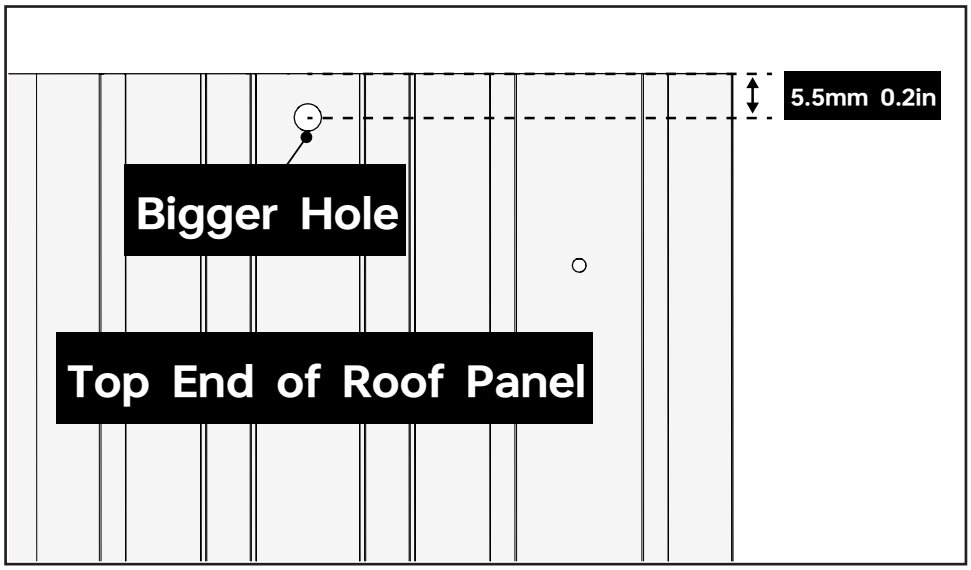

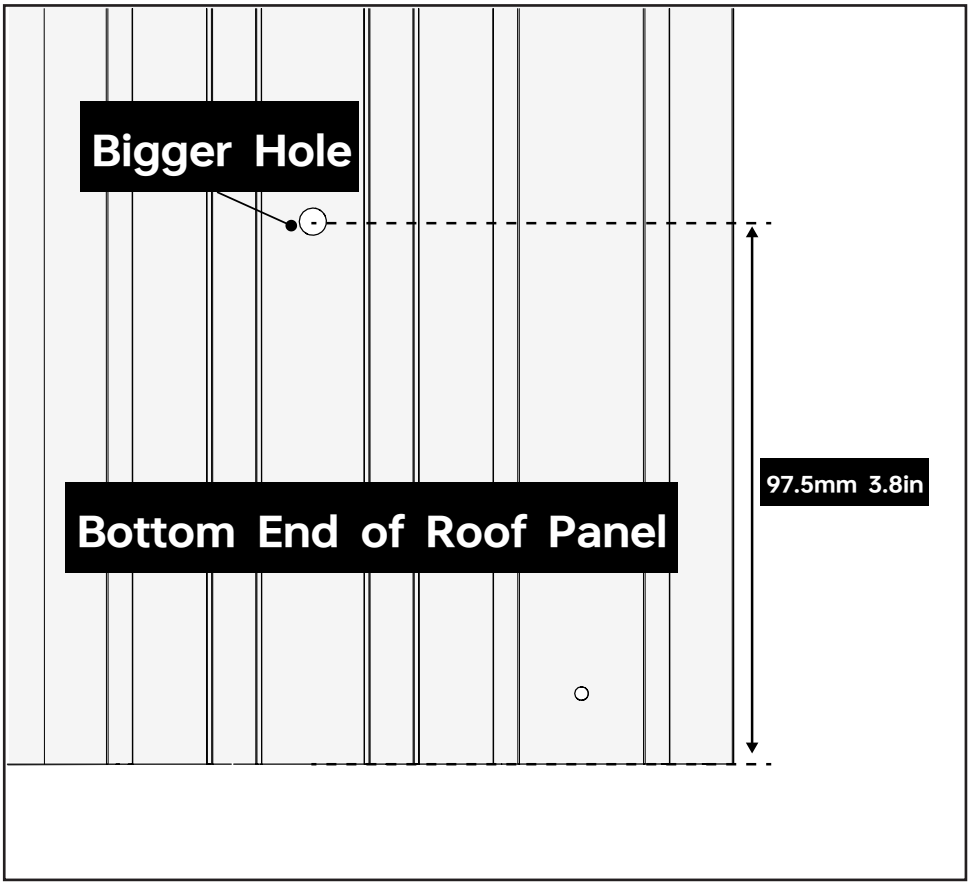

NOTE

IDENTIFYING THE TOP AND BOTTOM ENDS OF ROOF PANELS W1, W2, AND W3:
Roof panels W1, W2, and W3 each have a distinct top and bottom end. To determine the orientation: Locate the end of the panel with the bigger screw holes closer to the edge. This is the bottom end. The opposite end, with the bigger screw holes further from the edge, is the top end.

7

Part	Qty
W3	1
S3	6
S4	6

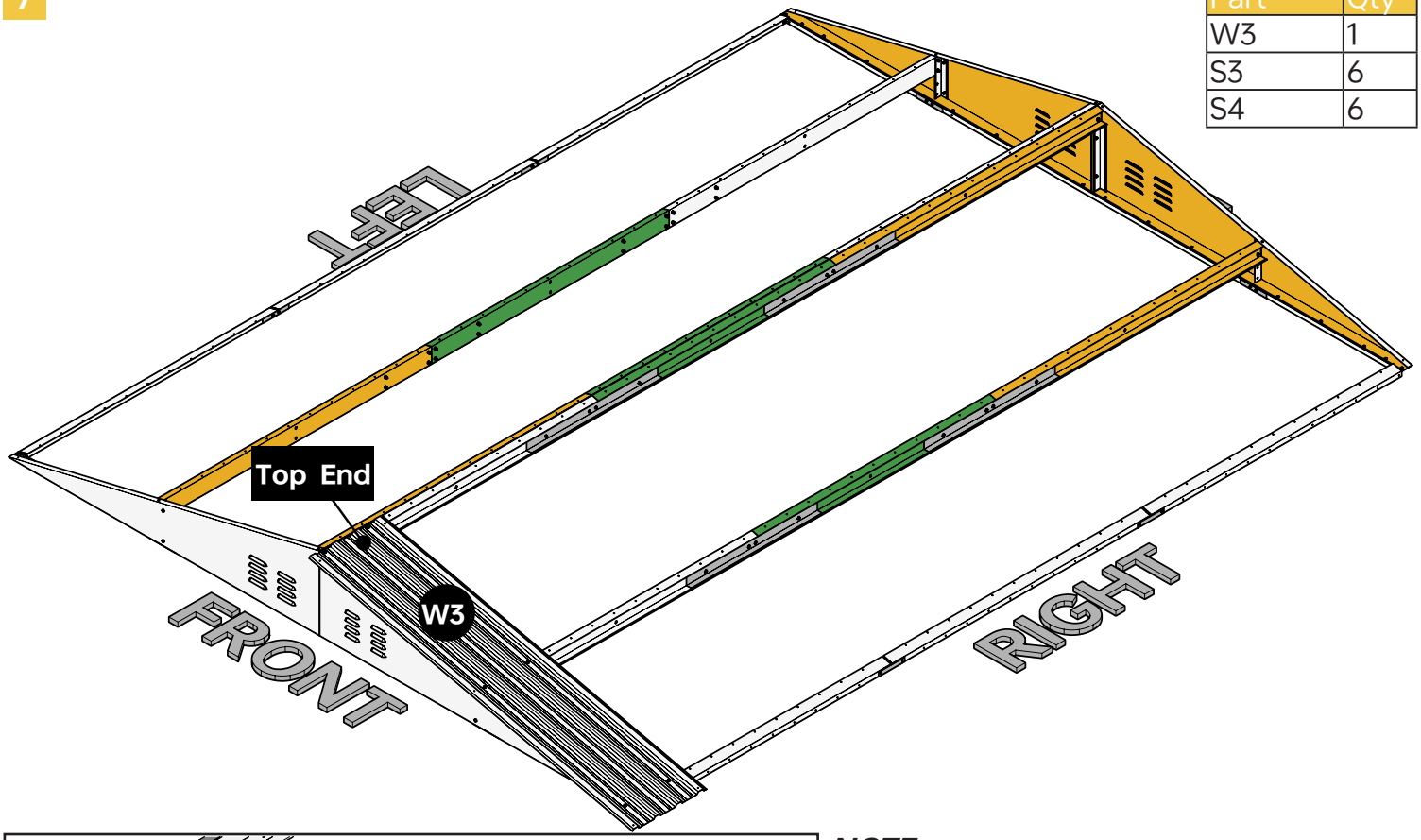

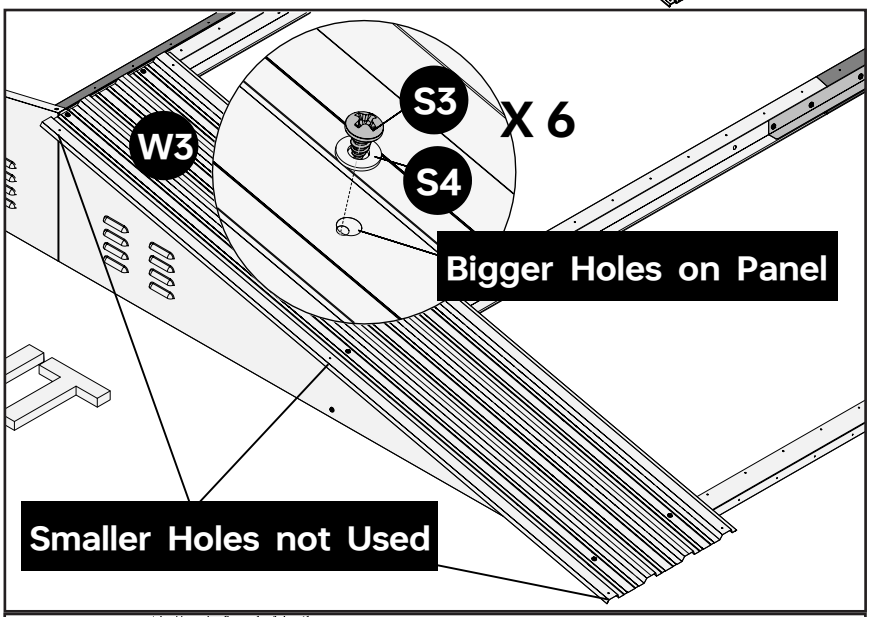

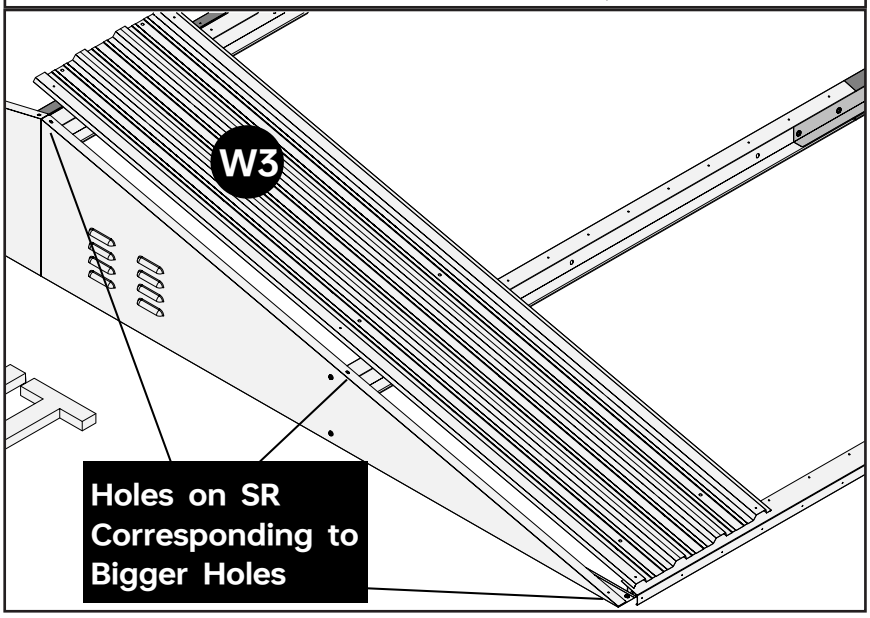

NOTE

When attaching W3 to the rest of the shed, use the six bigger screw holes instead of the smaller screw holes.
Three sets of S3+S4 screw will connect W3 to SR. SR have three screw holes corresponding to the bigger screw holes on W3.

After this step, the quantity of S3+S4 screws to be used on roof panels will not be shown in the illustrations. It will still be shown in the part/qty table.
This is to avoid cluttering the manual with unnecessary drawings.

8

Part	Qty
W1	1
Y1	1
Y2	1
S3	8
S4	8

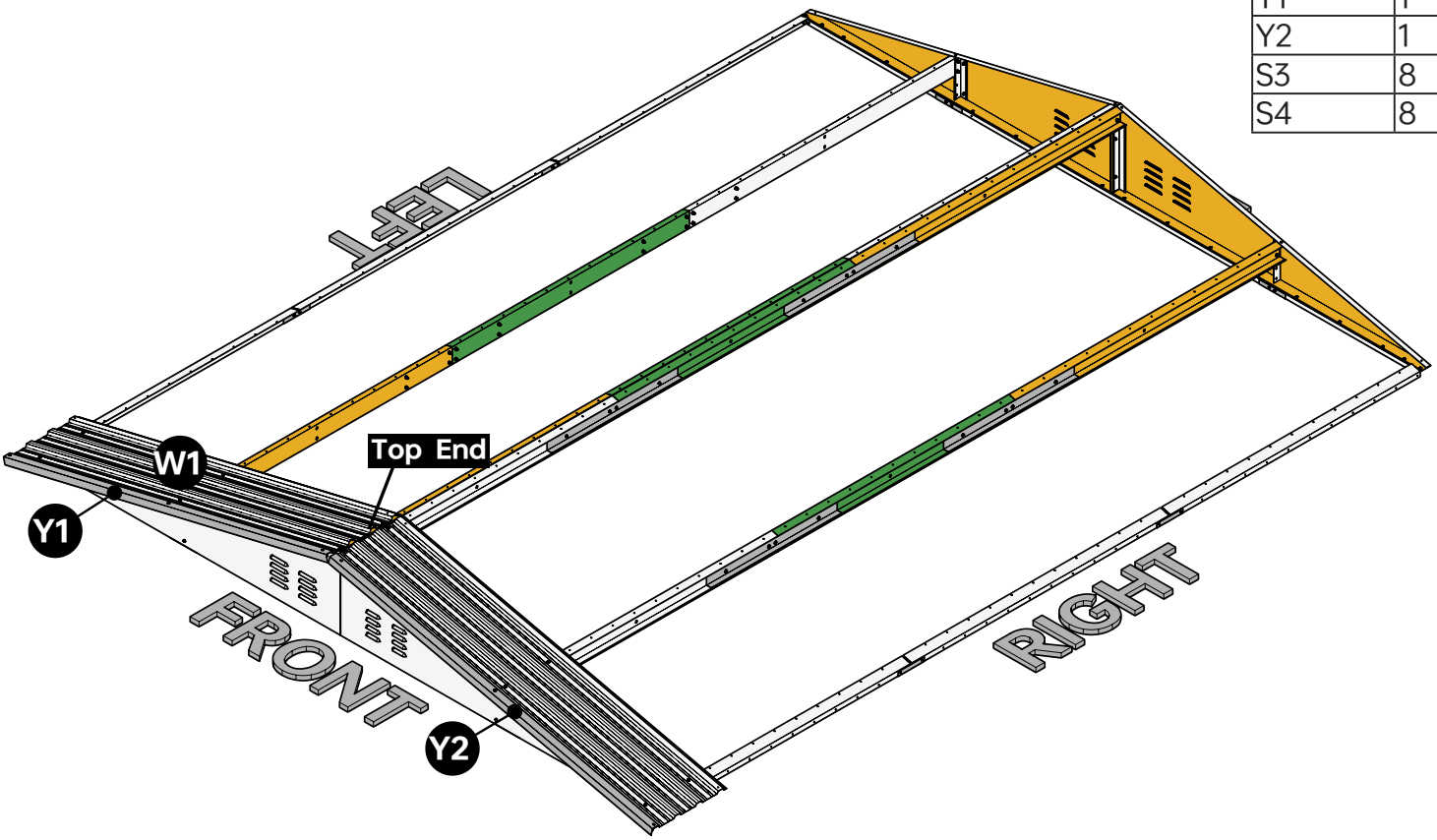

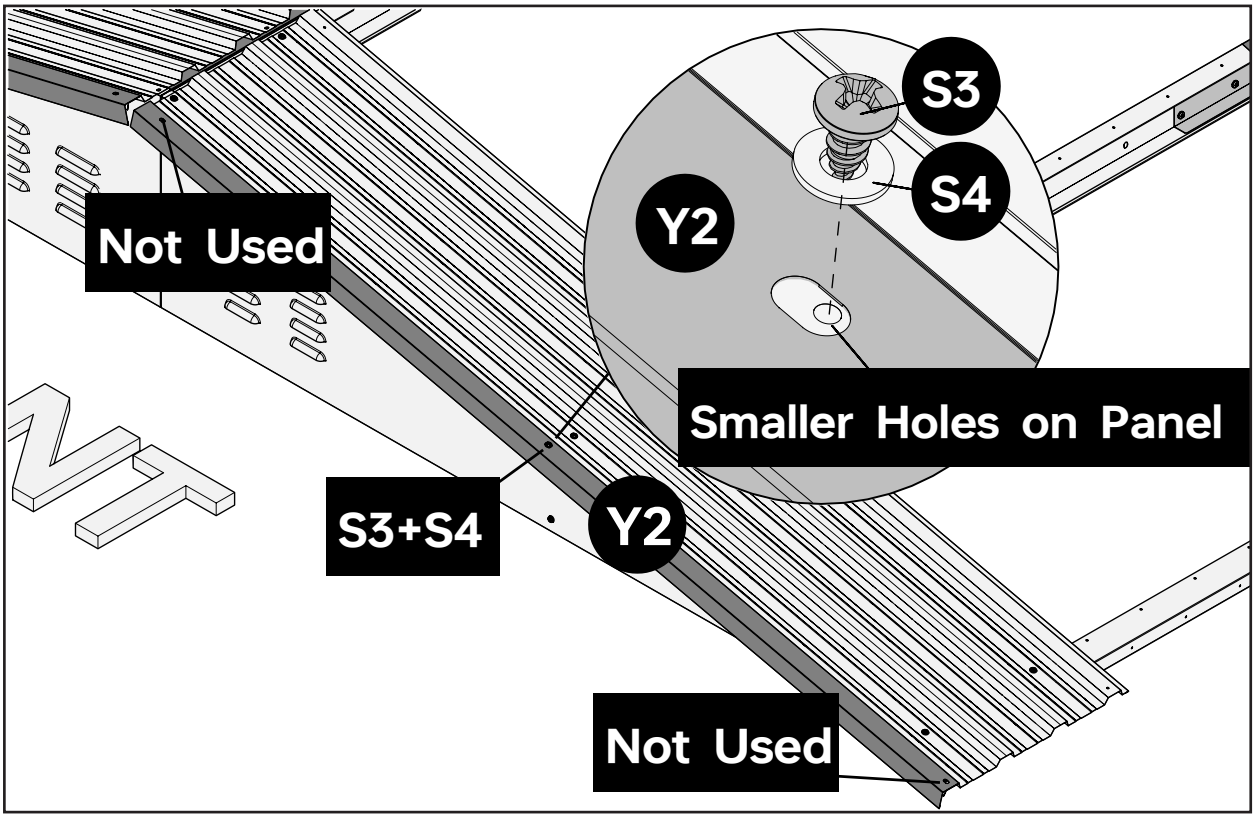

NOTE

Y1 and Y2 have three screw holes. For this step, only use the one in the middle. This middle screw hole corresponds to the smaller hole on wall panels.

9

Part	Qty
G2	1
W1	2
W2	4
S3	40
S4	40

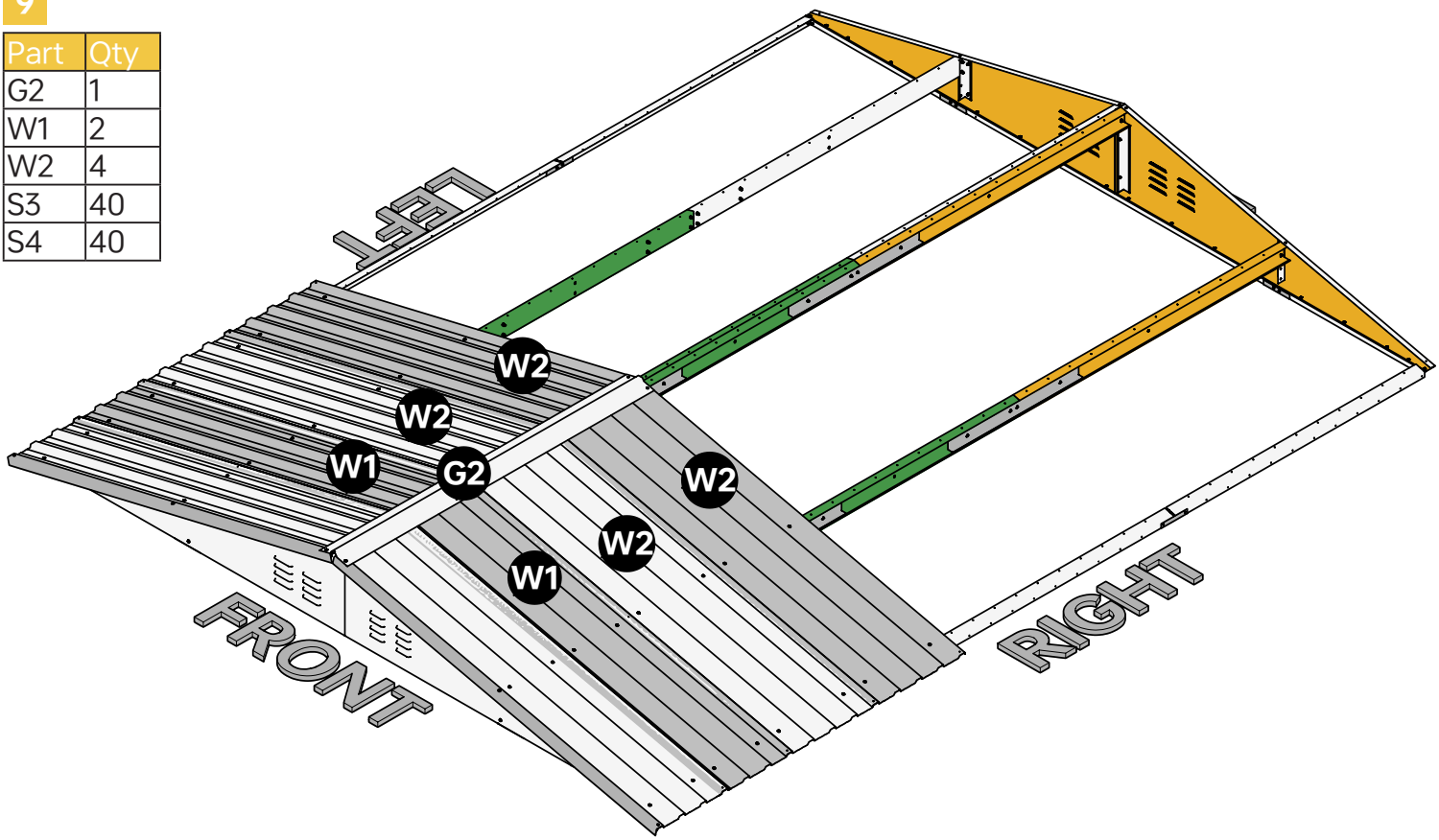

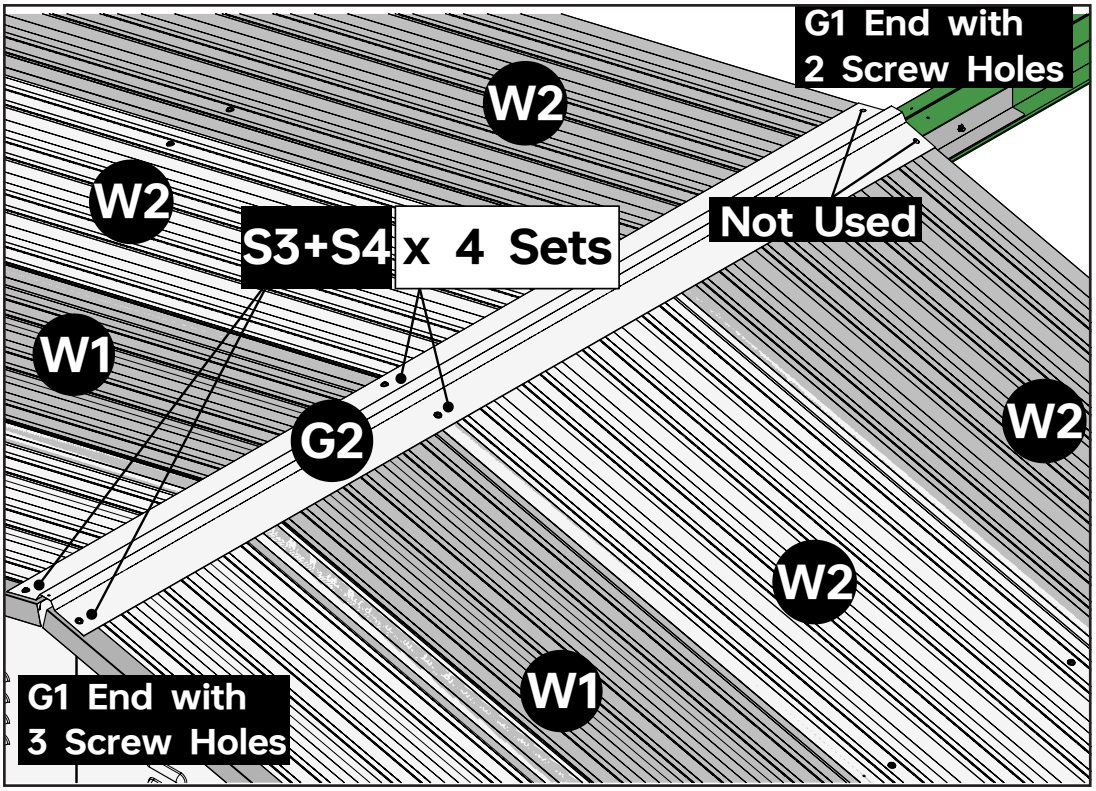

NOTE

In the illustration above, W1W2 panels are given different colors to improve visibility.
Stacking roof panels is similar to stacking wall panels. It doesn't matter which panel is layered on top.

Part G2 has two ends, one with three screw holes and the other with two. For this step, place the end with three holes in the front. Do not use the screw holes on the end with two screw holes.

The S3+S4 x 4 mark refers to the screws used on G2.

10

Part	Qty
G	1
W1	4
S3	26
S4	26

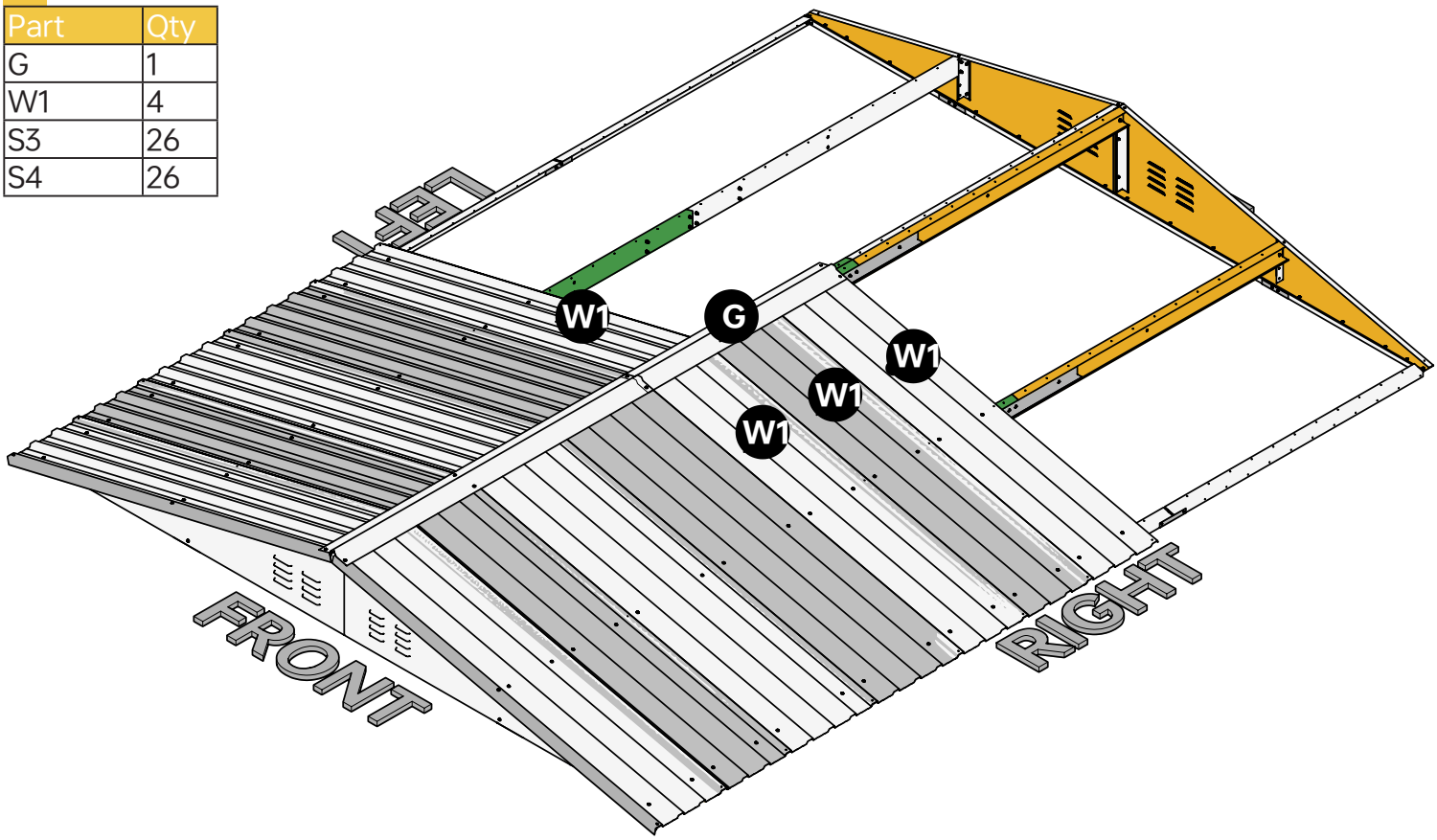

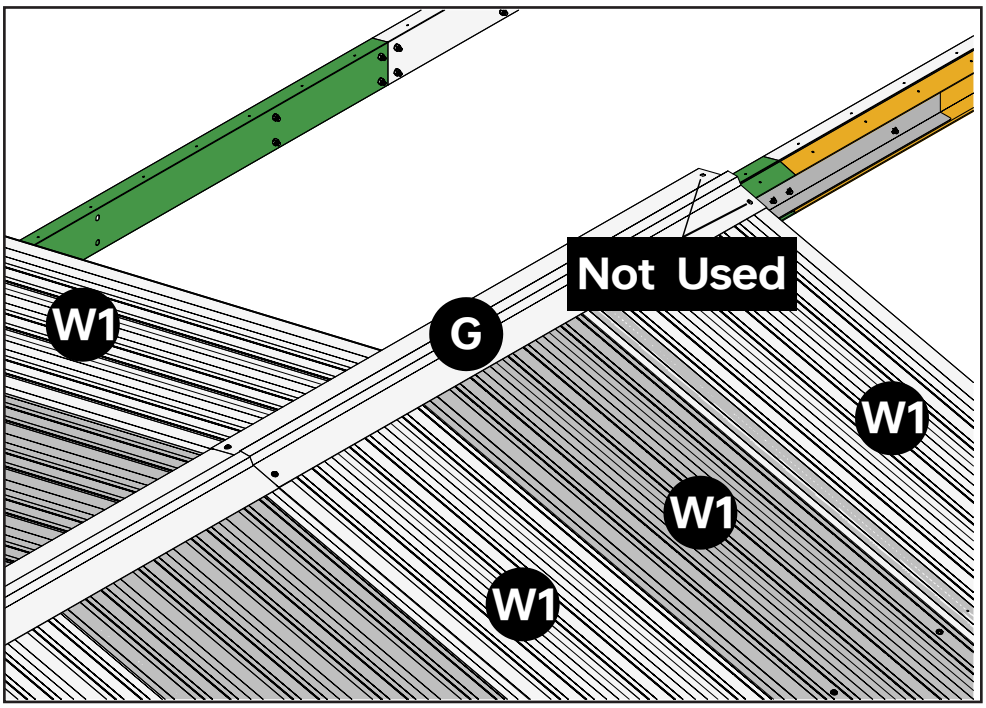

NOTE

The two screw holes left unused on G2 is used in this step.
You might be wondering why Ridge G is used in this step. Why not use it after another two roof panels are placed.
G has to be connected to the G2 in this step. If not, you will have to partially lean onto the half finished roof to get the two ridges connected later. The downside of this method, is that it will become tedious to place the roof panels that are under G.

Part	Qty
G2	1
S3	53
S4	53
W1	4
W2	4
Y1	1

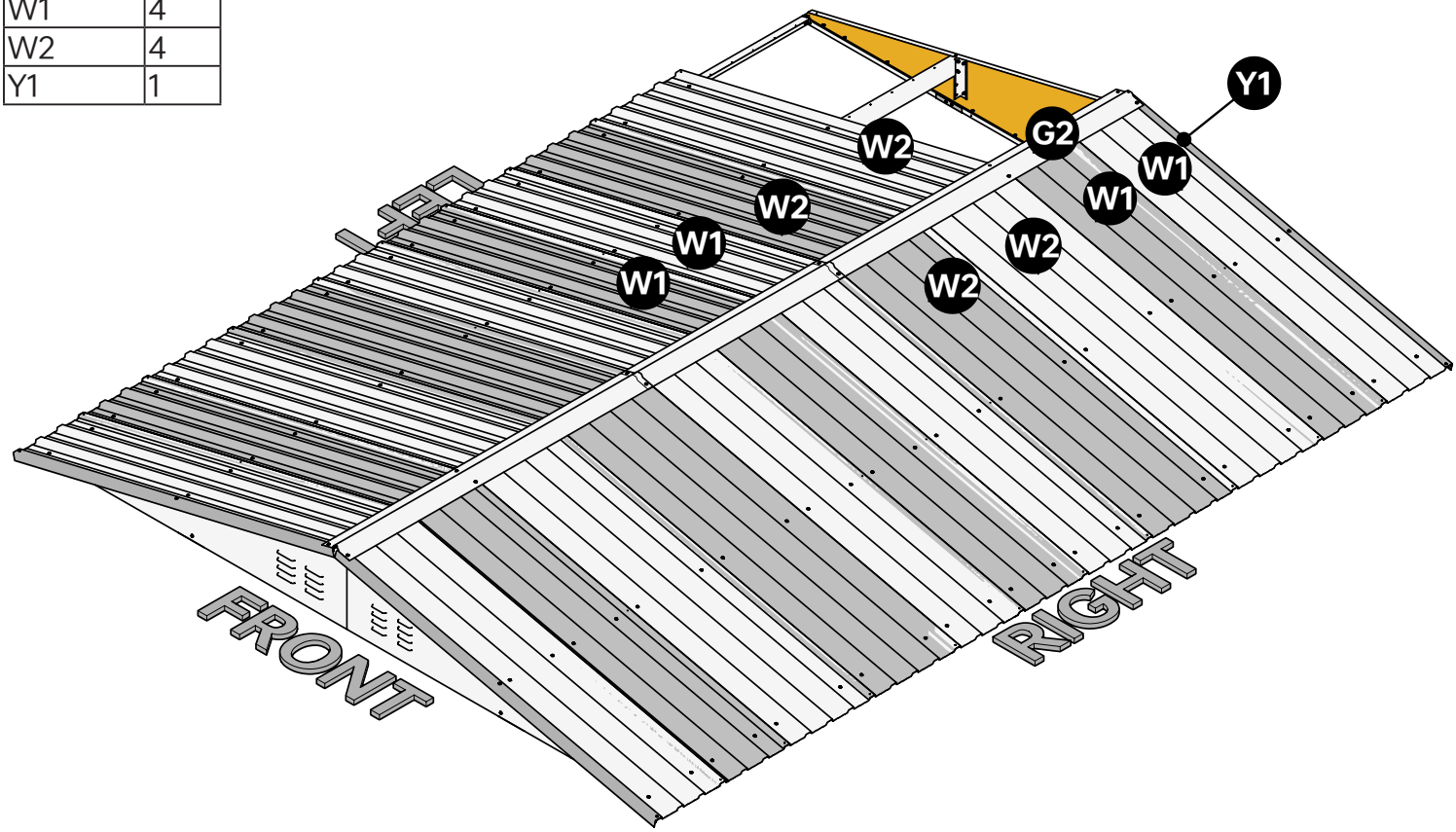

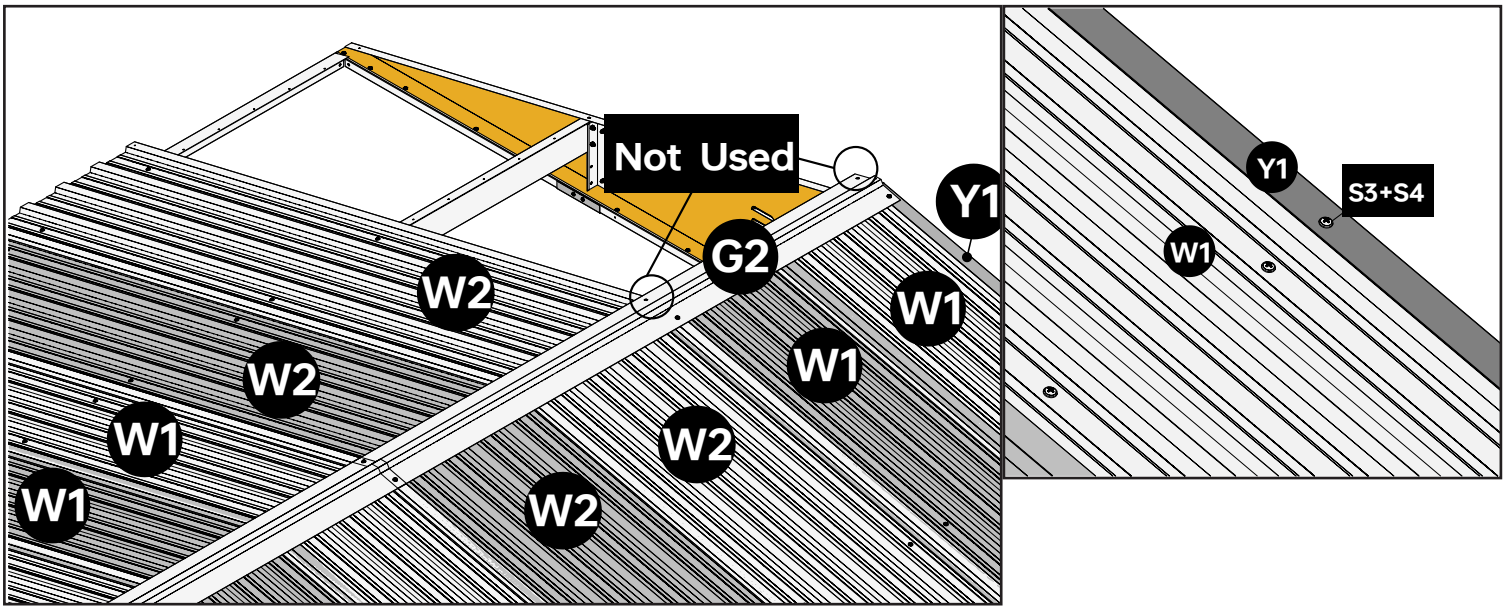

NOTE

For this step, place the end of G2 with three holes at the back side of the shed.

12

Part	Qty
S3	15
S4	15
W1	1
W3	1
Y2	1

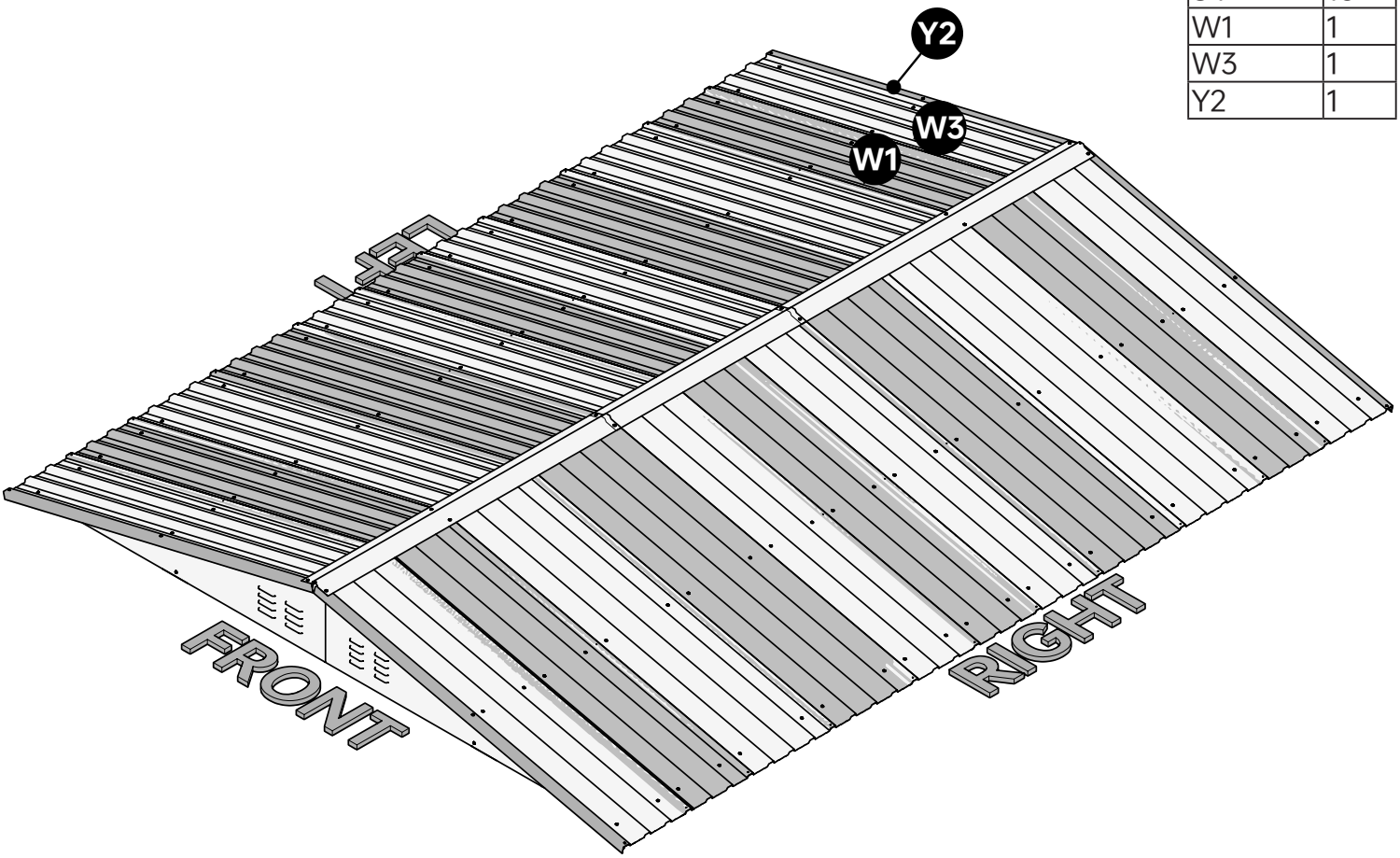

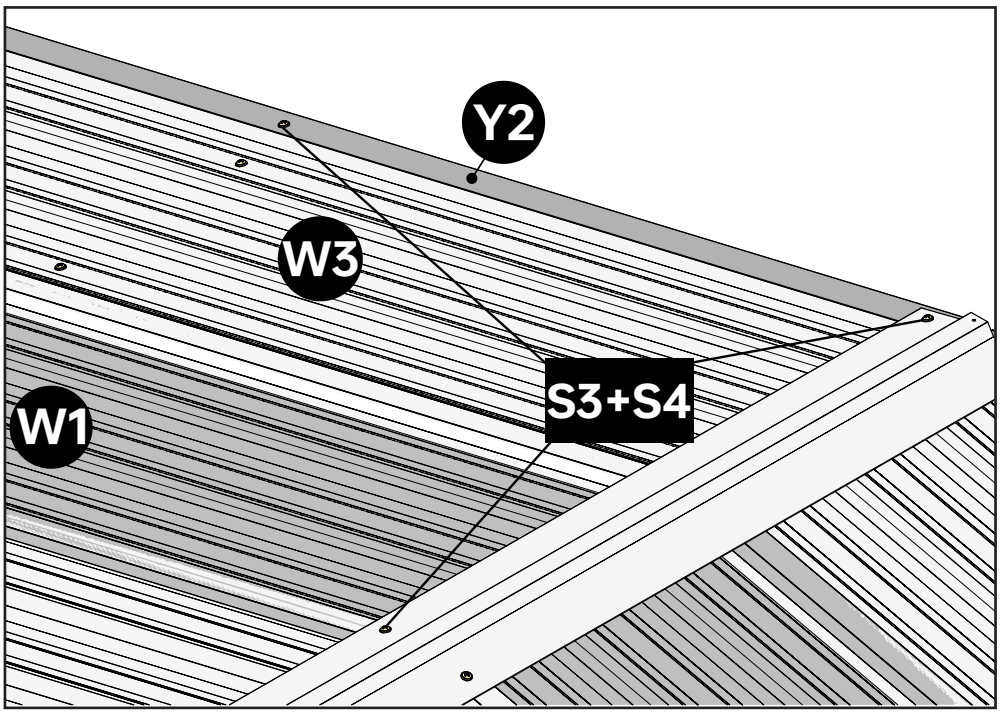

13

Part	Qty
D	2
E	4
S3	14
S4	14
Y3	2
Y4	2
Y5	2

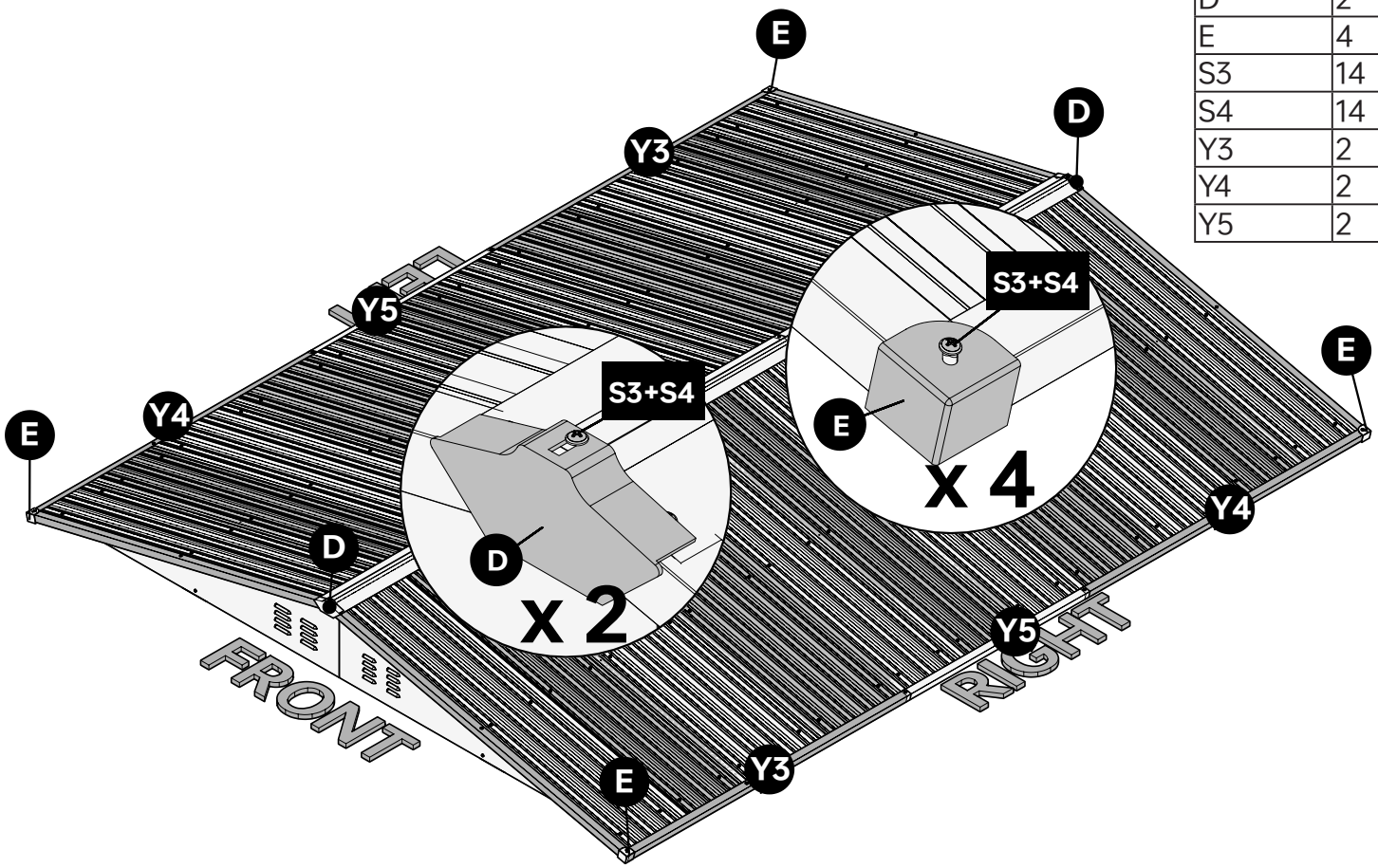

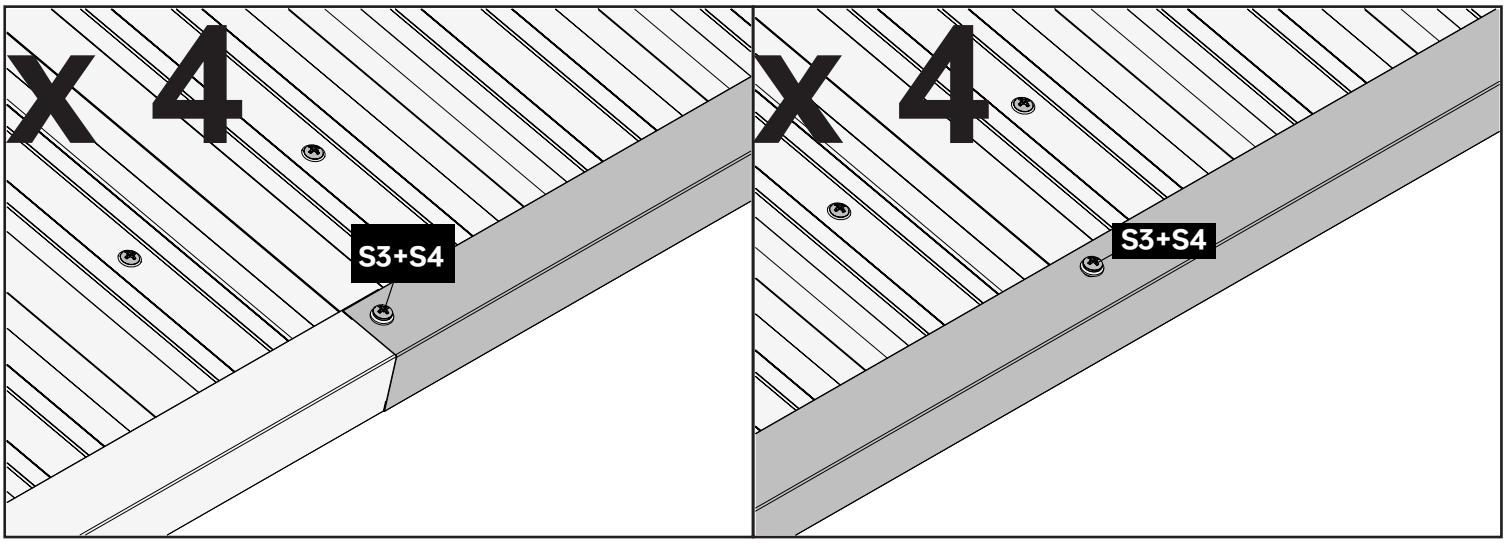

NOTE

The smaller screw holes left unused on roof panels are used here.
For Y1~Y5 it does not matter which one is layered on top.

06 Doors

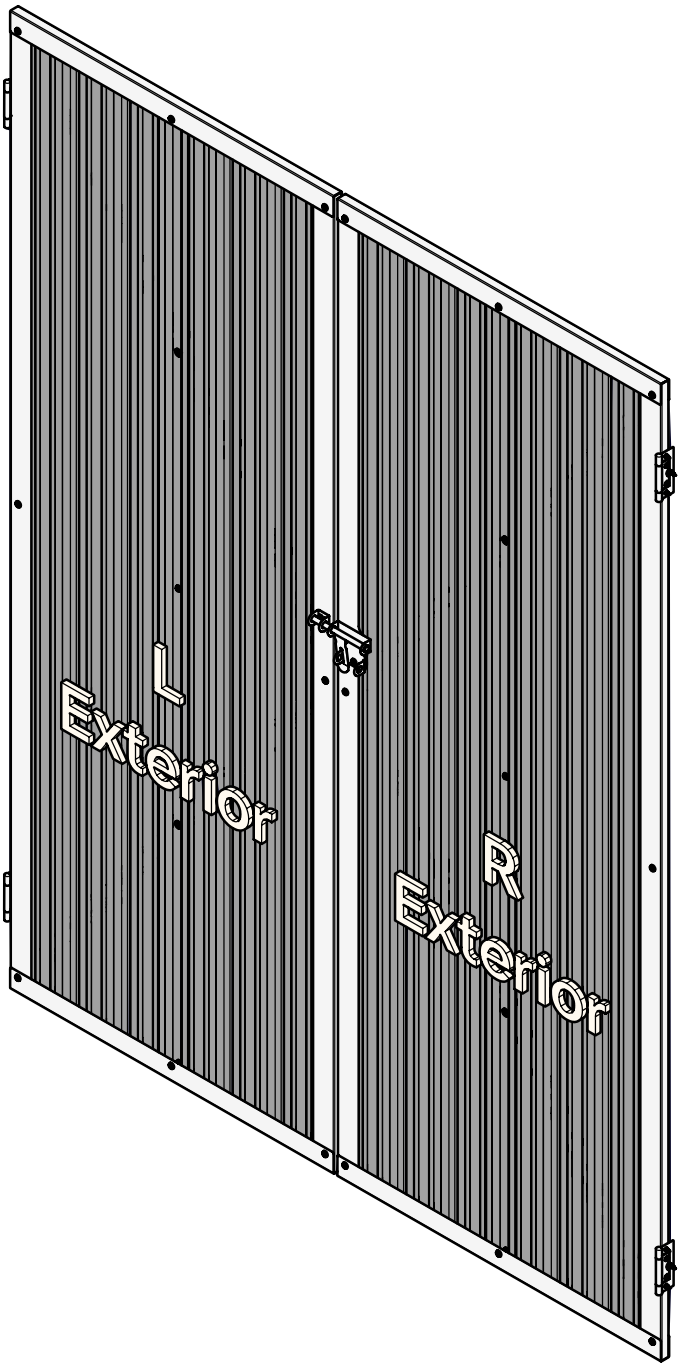

NOTE

In previous chapters we talked about the interior and exterior side of panels. The interior side has a light gray color regardless of the color of the shed. And the exterior side has the color of the shed. In the first few steps of this chapter, we will be using the interior and exterior mark to help you understand what is going on. L and R stand for Left Door and Right Door

1

Part	Qty
LK1	1
LT	2
M	2
M1	2
M2	1
M3S	1
M3	1
M4L	1
S1	3
S2	11
S3	8
S4	13
S5	3
S9	8

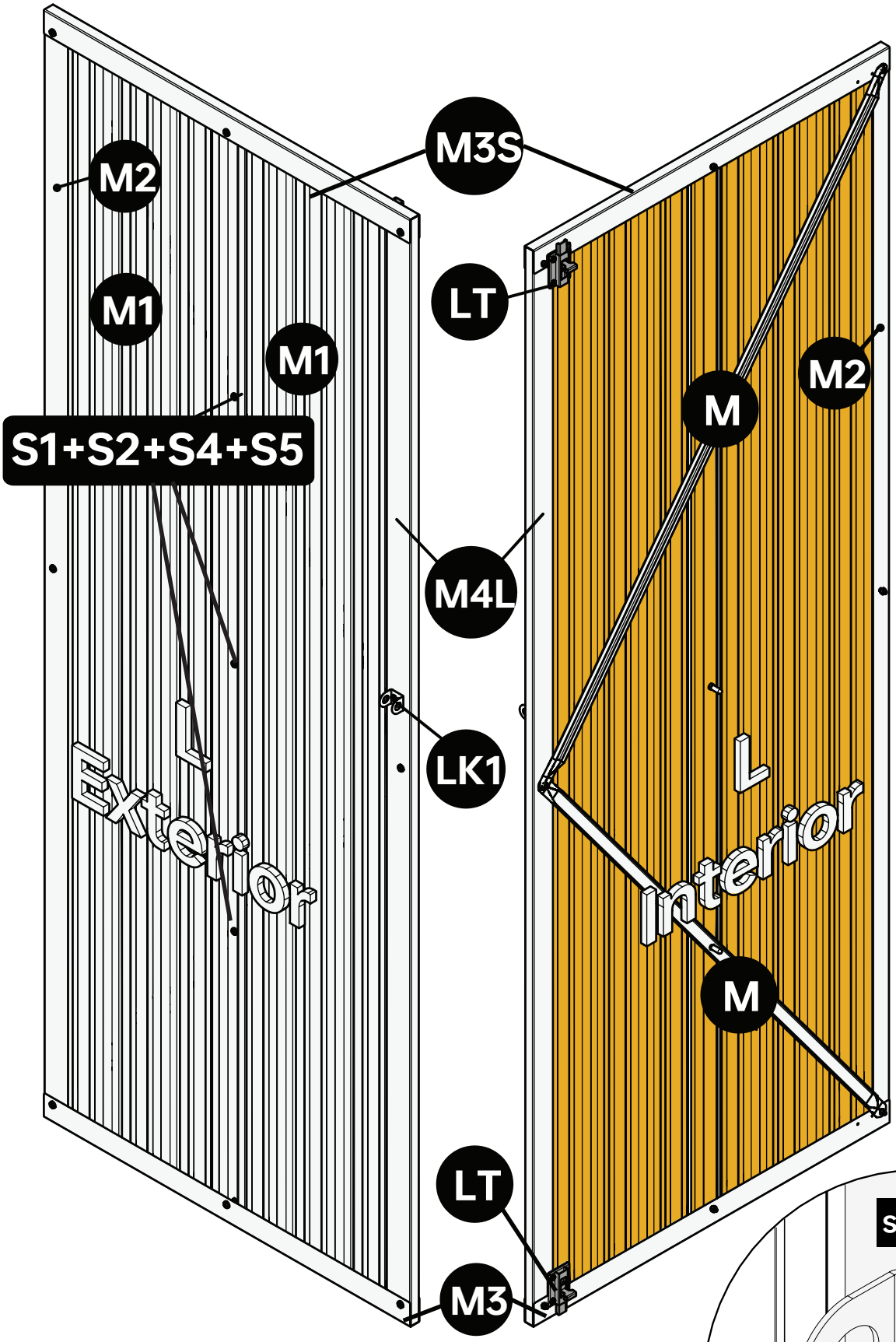

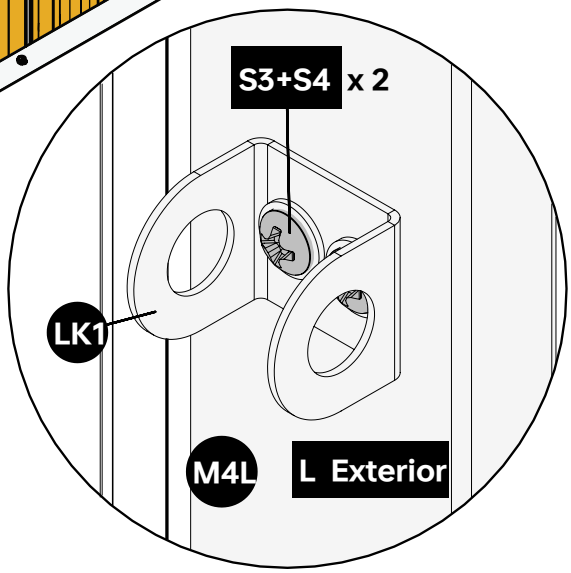

NOTE

This is the exterior and interior of the same Left Door.

Continued on next page.

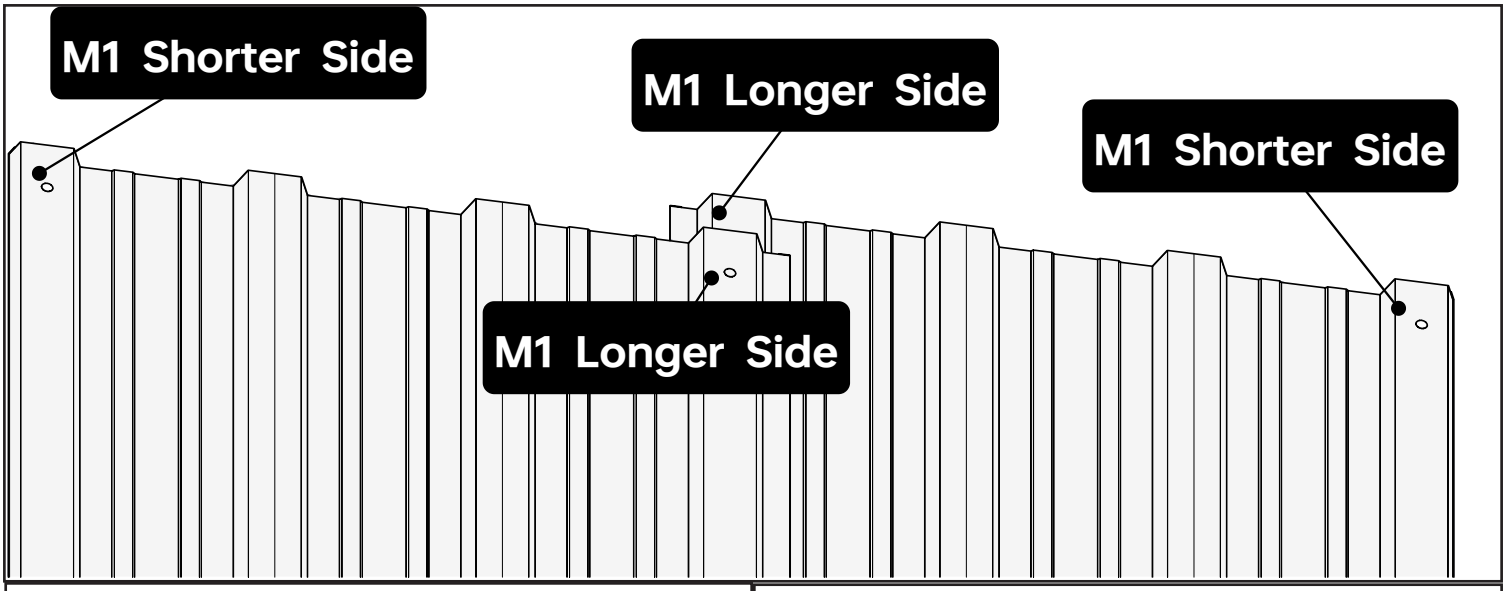

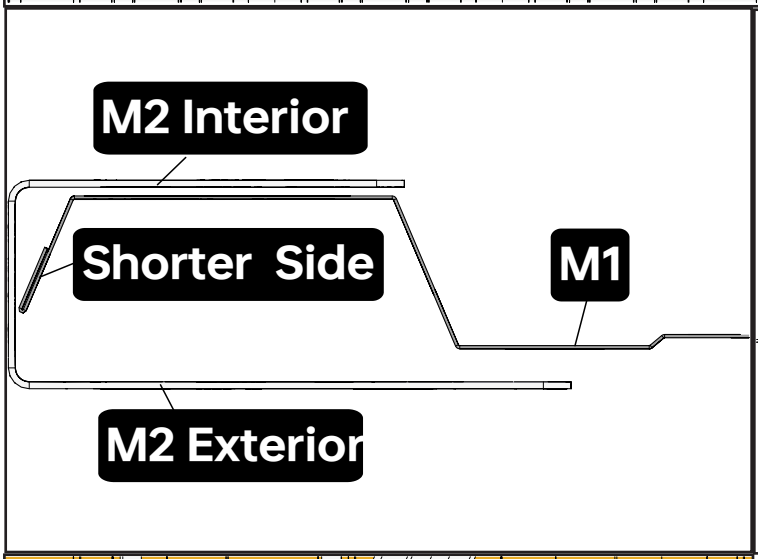

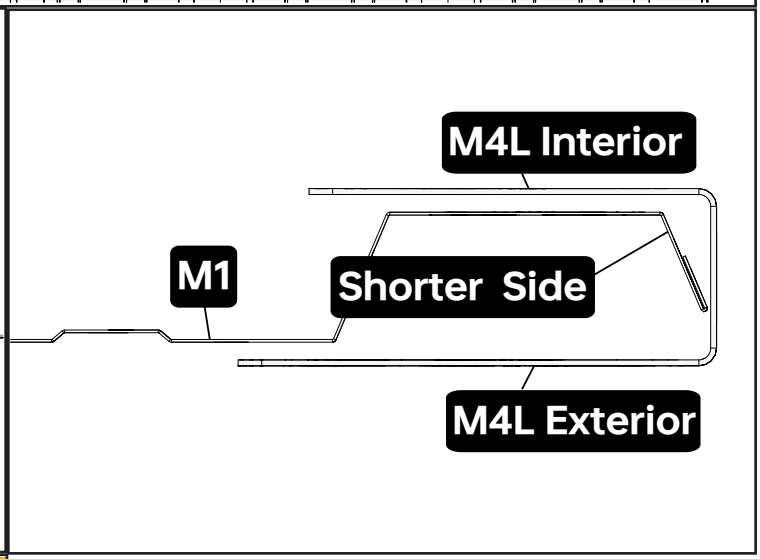

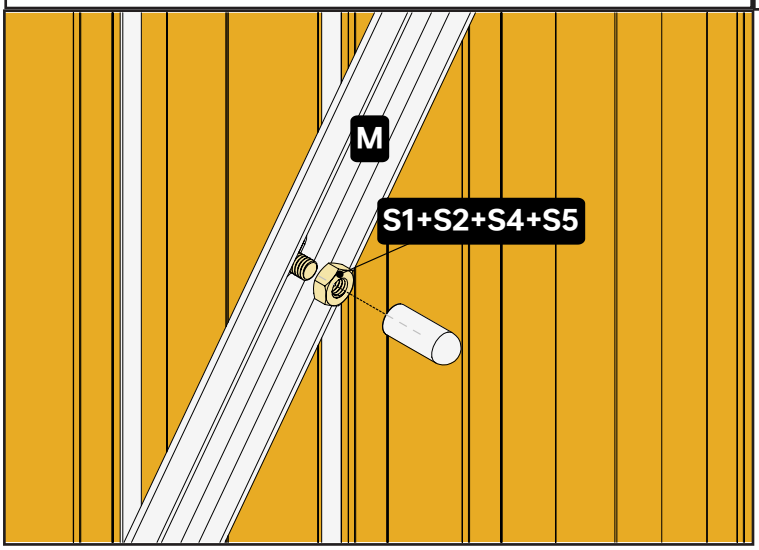

NOTE

M1 does not have a symmetrical design. Take a look at the cross section of M1, you will find a longer side and a shorter side. When stacking the two M1 together, make sure that the shorter side of M1 is inside M2 or M4L.

Use the shorter side of M2 and M4L as the interior side.

Continued on next page for this step.

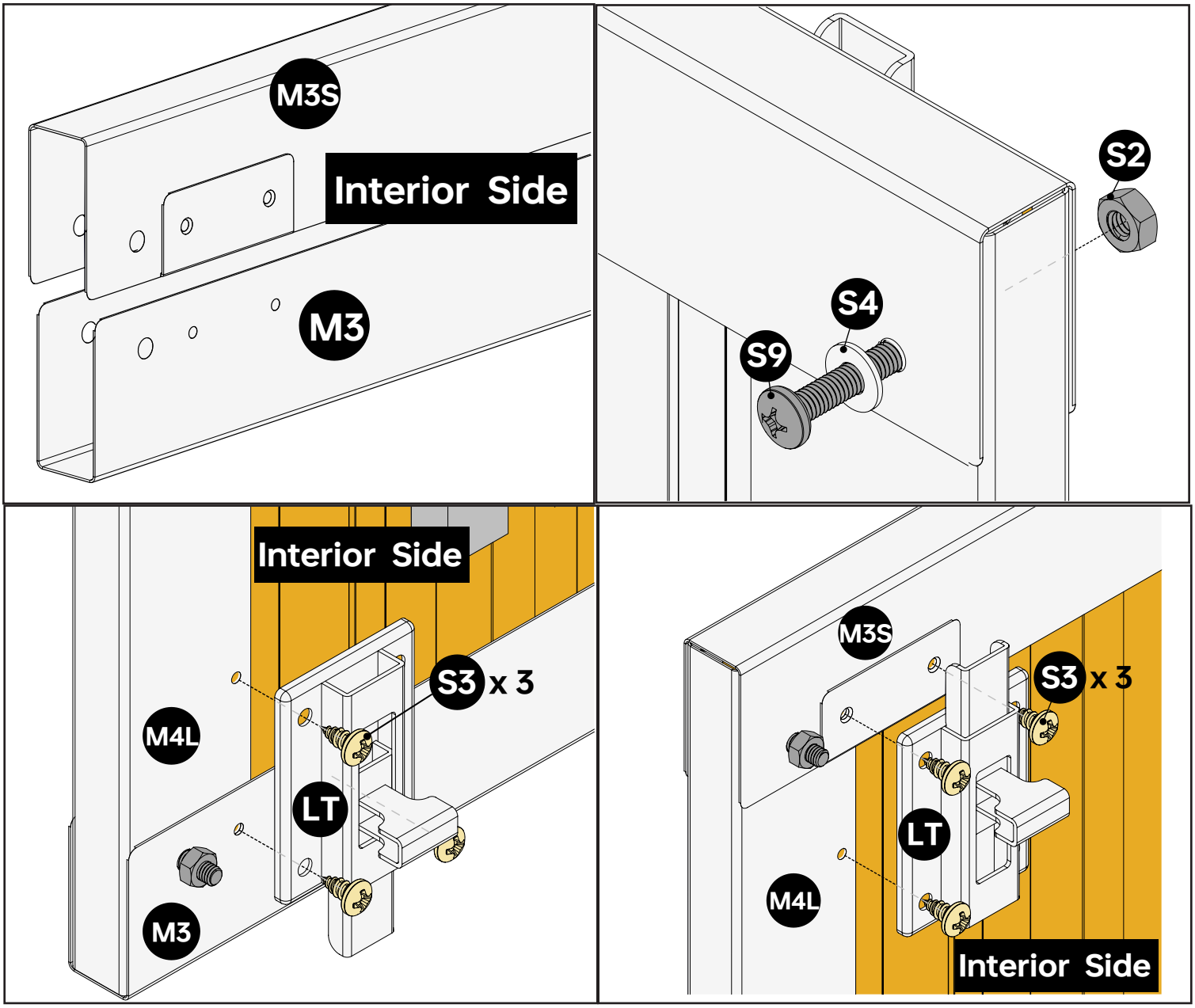

NOTE

Use S9+S4+S2 to connect M1 panel to M2~M4.

For M3 and M3S, use the side with smaller screw holes as the interior side.

LT has a symmetrical design and you can use either end as the top/bottom end. Three out of the four screw holes on each LT will be used.

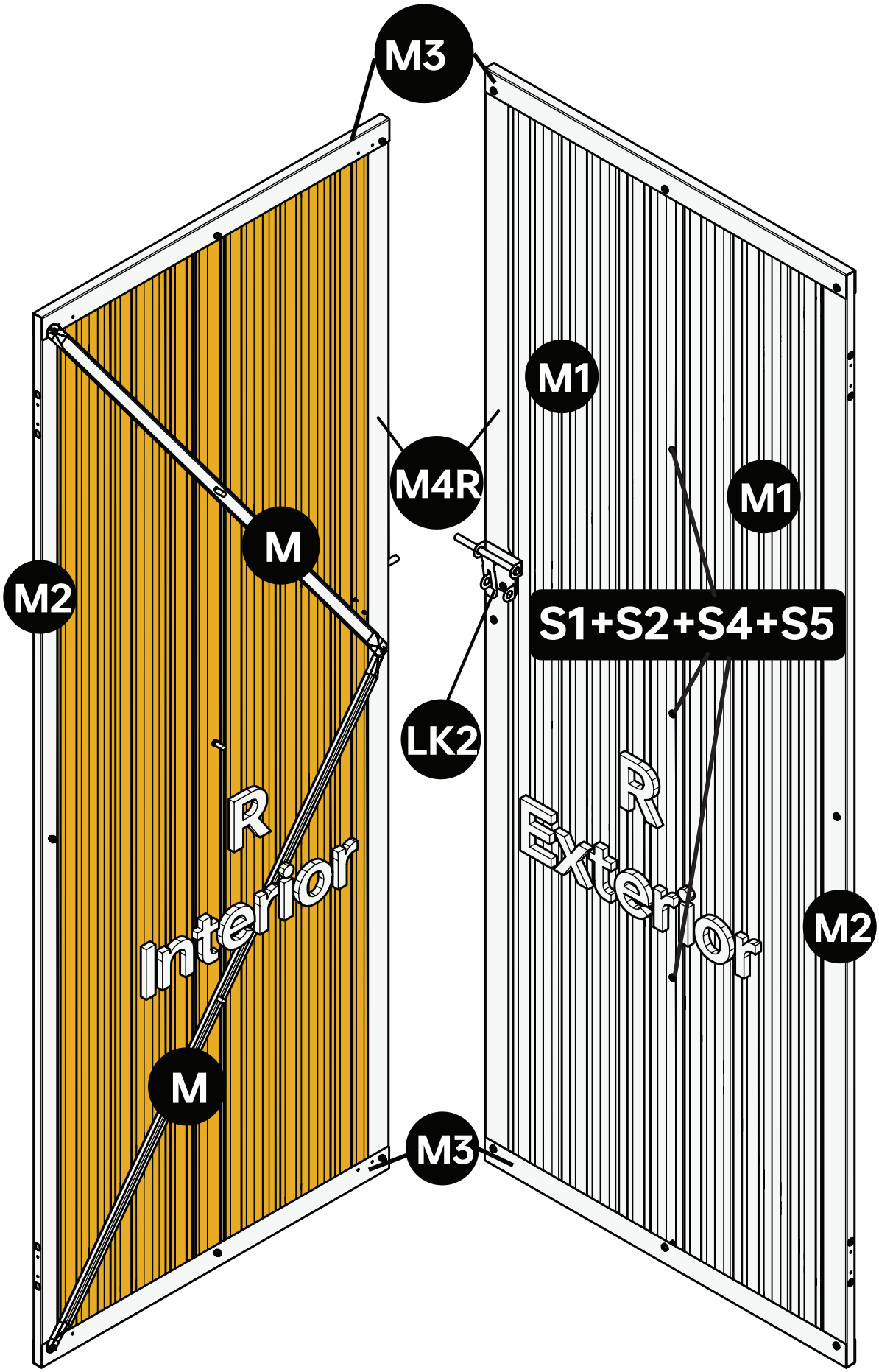

2

Part	Qty
LK2	1
M	2
M1	2
M2	1
M3	2
M4R	1
S1	3
S2	11
S3	3
S4	14
S5	3
S9	8

NOTE

This is the exterior and interior of the same Right Door.
Continued on next page.

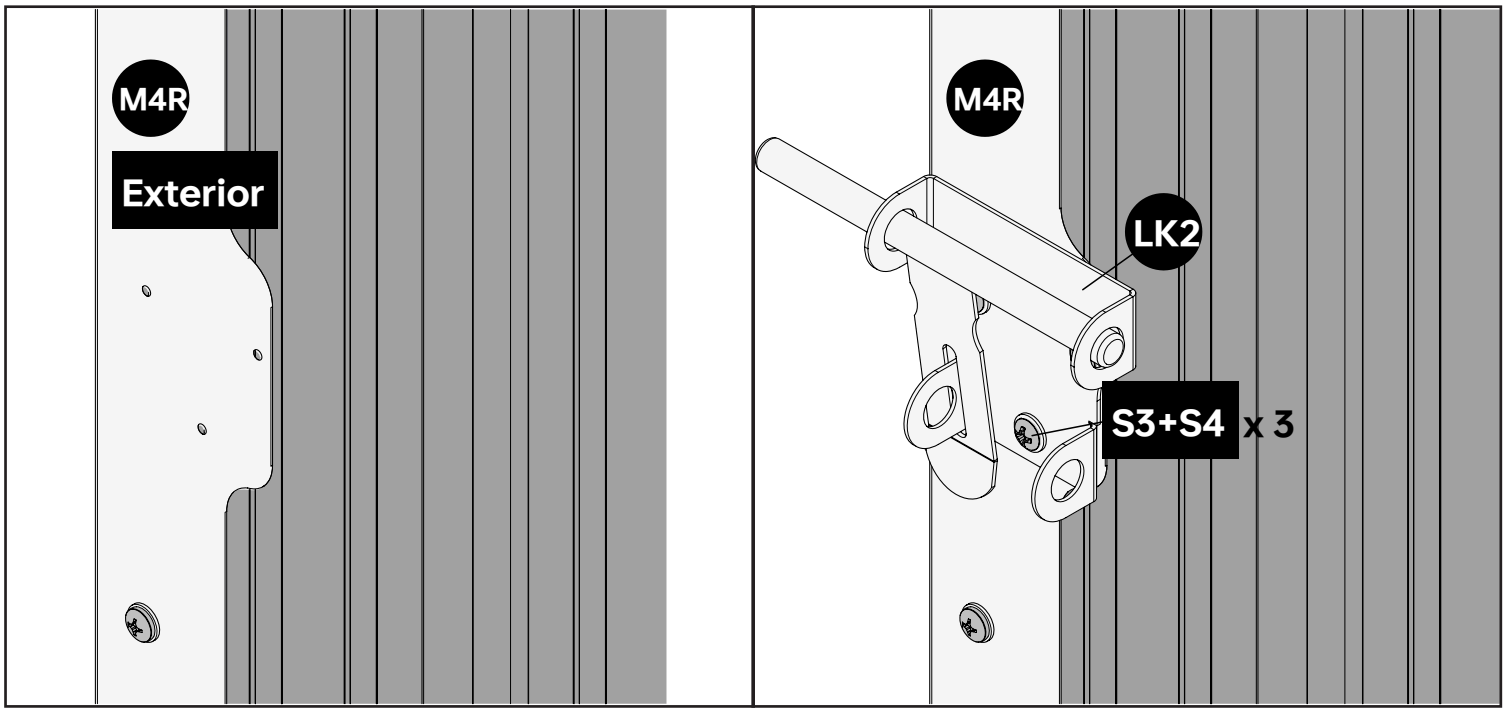

NOTE

Similar to last step, make sure that the shorter side of M1 is inside M2 or M4R. Also, use the wider side of M2 and M4R as their exterior side.

3

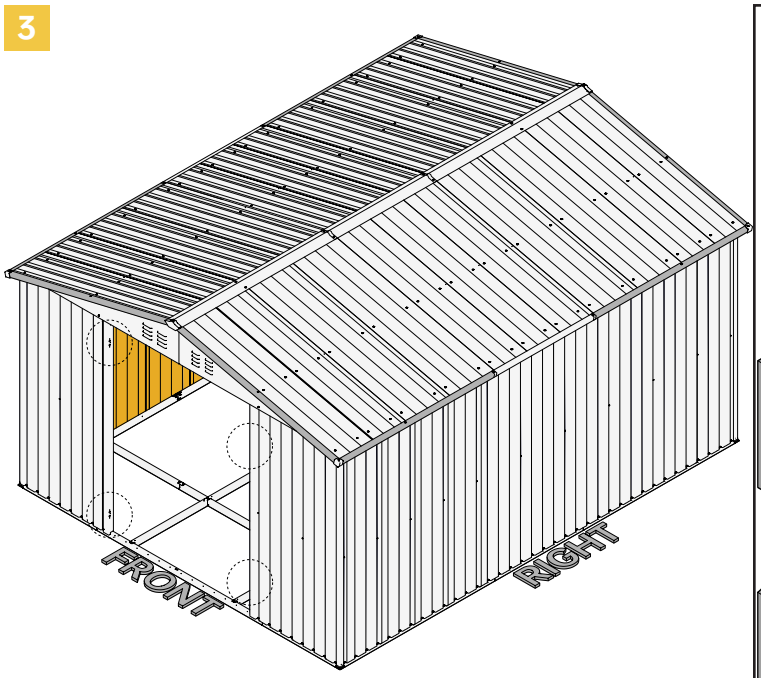

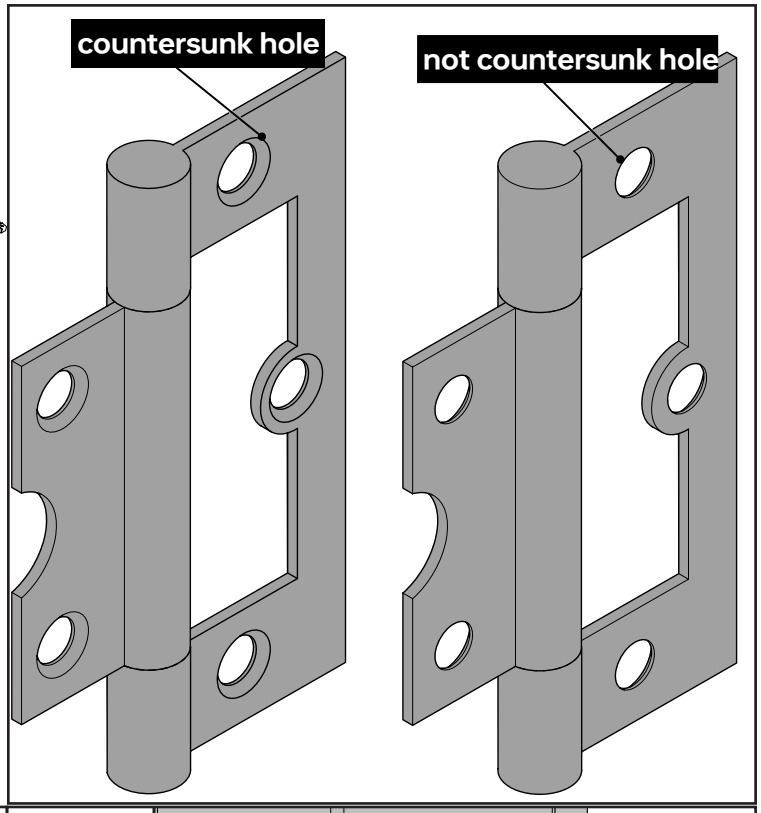

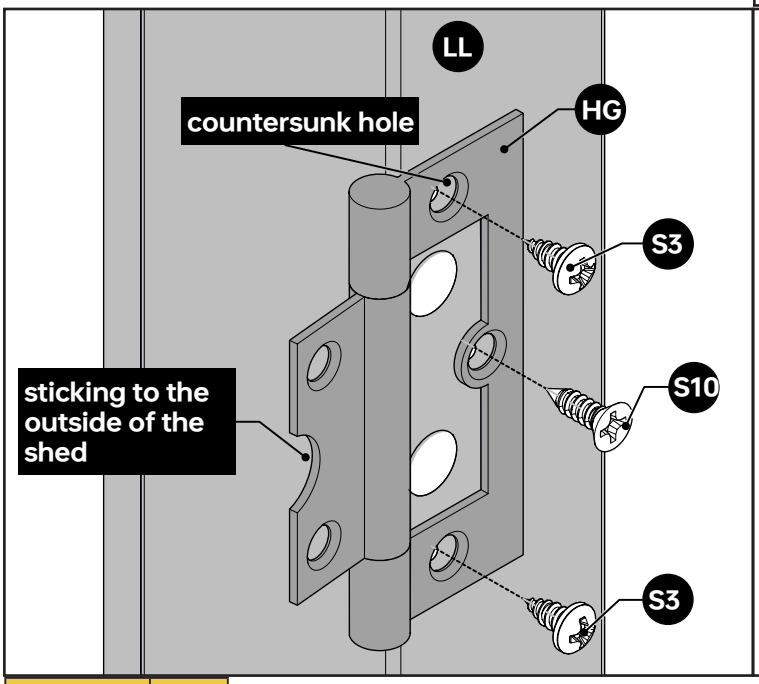

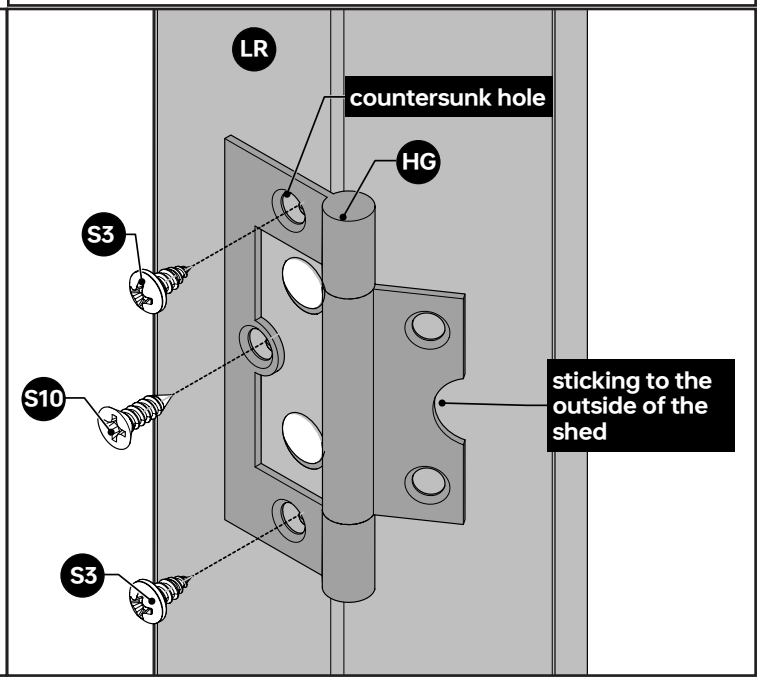

Part	Qty
HG	4
S3	8
S10	4

NOTE

Unfold the four hinges before using them. Use two S3 and one S10 per hinge.
The Hinge HG has two sides, a side with countersunk holes and a side without. When attaching HG to LL and LR, make sure the screws are going through the side with countersunk holes.
Also, after HG is attached to LL/LR, the semicircle opening on the hinge is sticking to the outside of the shed.
Four sets of Hinges are used in this shed. To improve readability of the manual, In this and the next step, only the two sets of Hinges at the top end of LL and LR are shown.

DO NOT USE S4 WITH HINGES.

4
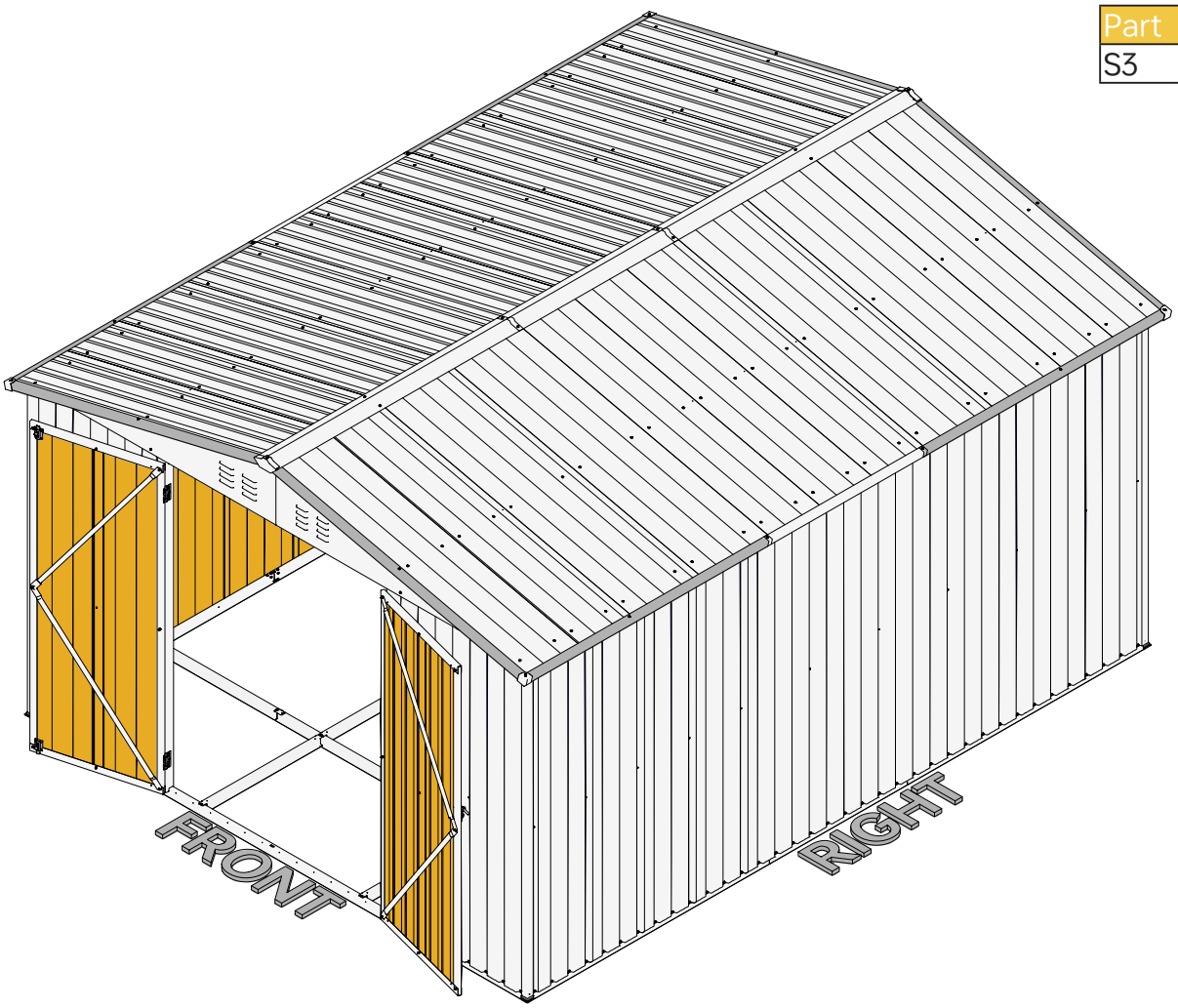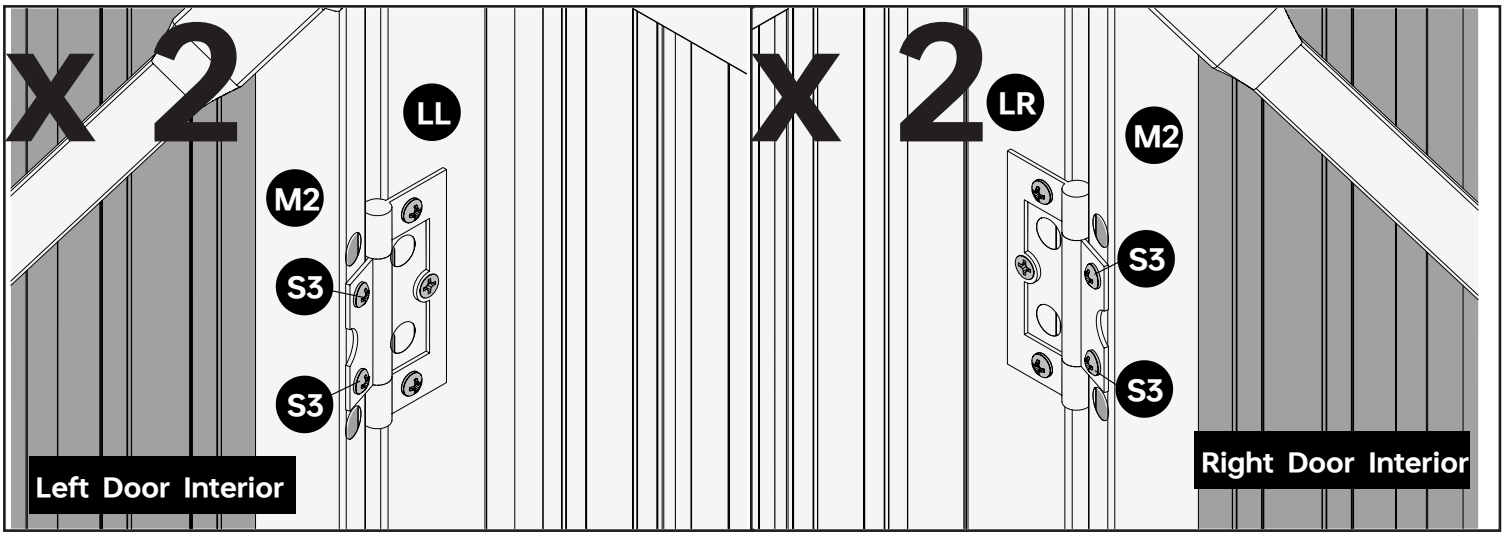
Part	Qty
S3	8