ASSEMBLYINSTRUCTIONS

DEAR CUSTOMER,

Caution:

1. Please read all instructions before assembly and check the carton for any parts that may have come loose during shipment. it is recommended to use two or more persons during the assembly process.
2.Please do not giscard any packaging before you have checked all the parts and fittings are incuded. if for any reason this product needs to be retumed it must be retumedpacked in its original packaging
3. Assemble this produet on a fat and clean surface to avoid scratching.
4.Please don't tighten the screws completely and go back later for afinal tightening of all the screws after pieces are aligned with each other !

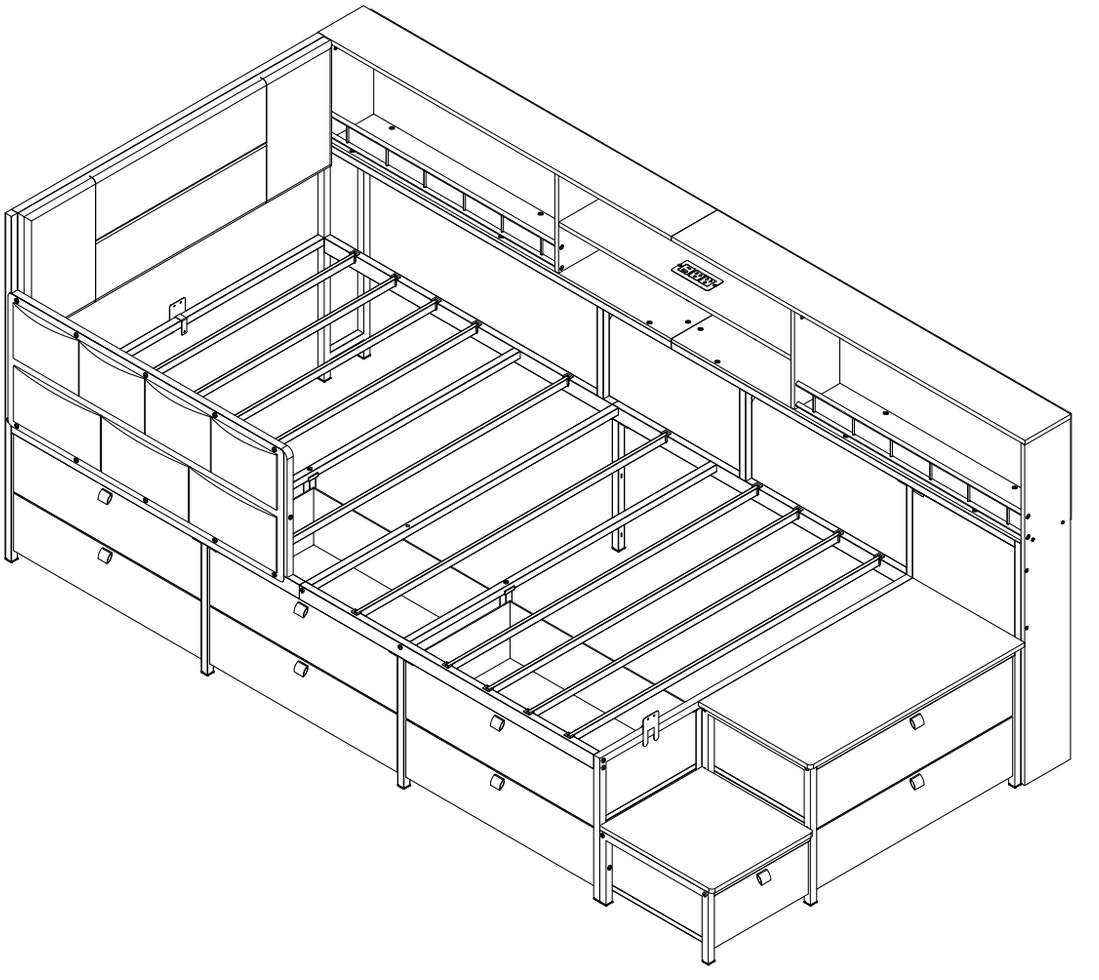

SKU:VDWSC100126301A
SKU:VDWSC100126302A
SKU:VDWSC100126303A

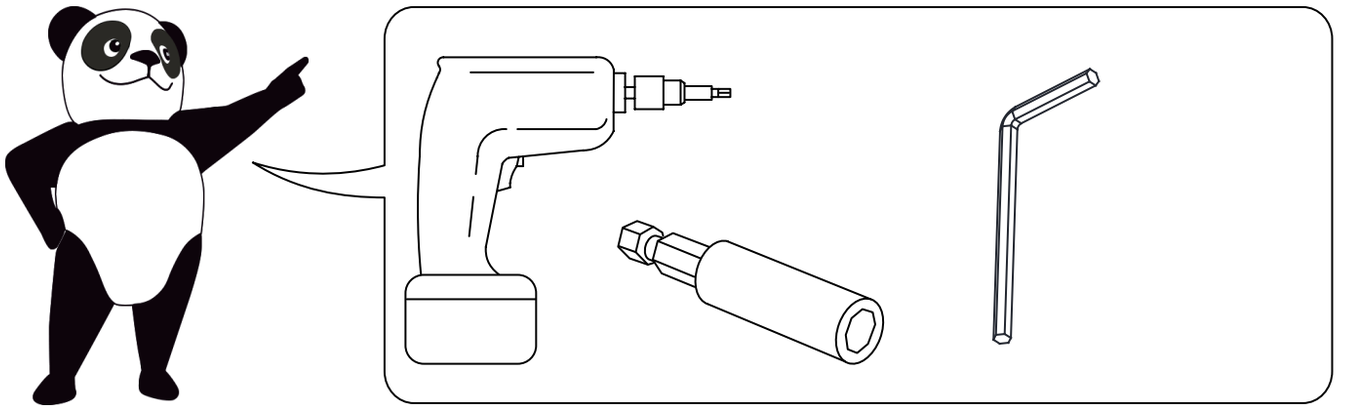

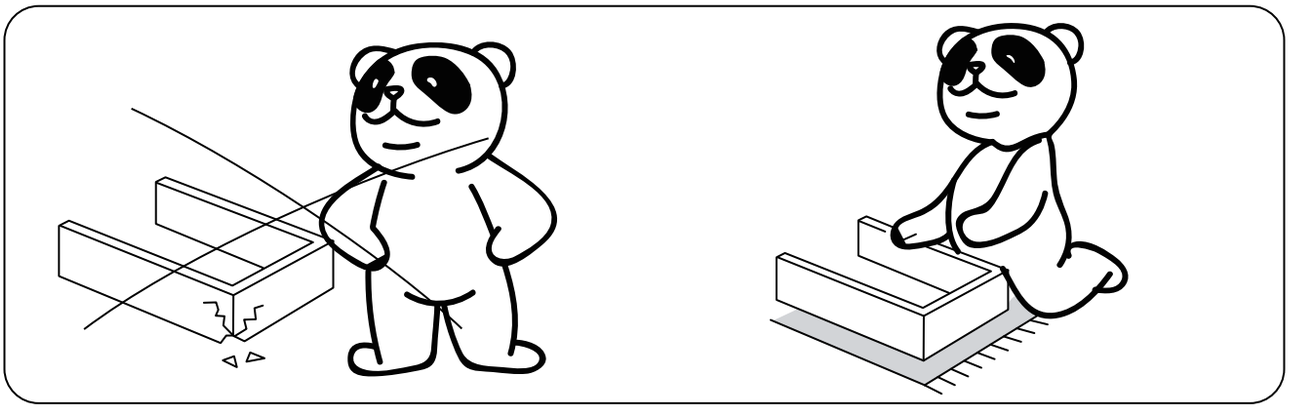

Violent installation is prohibited

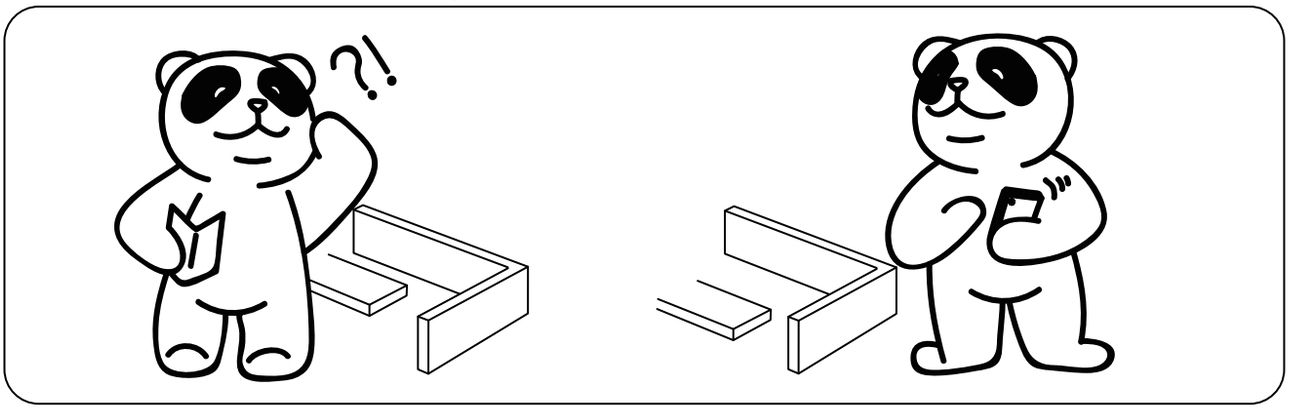

Please call if you need help

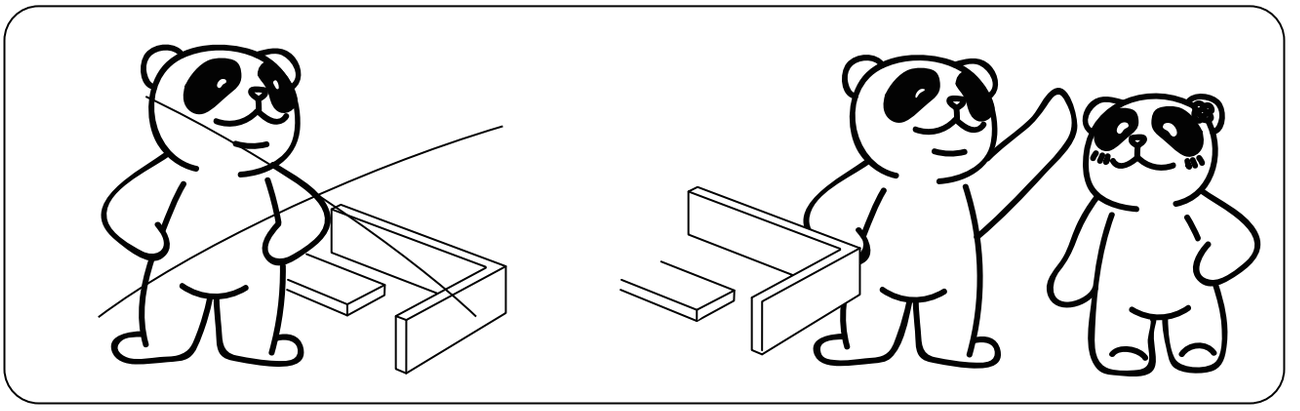

Multi-person cooperation is recommended

1.Installation precautions

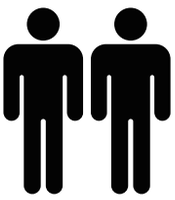

2 PERS.

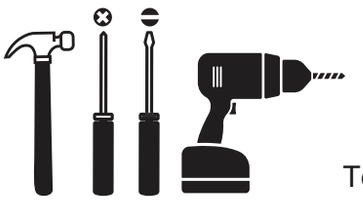

Tools required (not included)

2.Matters needing attention

⚠ WARNING





Children have died from furniture tipover. To reduce the risk of furniture tipover:

- ALWAYS install Anti-tip deviceprovided.
- NEVER put a TV on this product.
- NEVER allow children to stand, climb or hang on drawers, doors, or shelves.
- NEVER open more than one drawer at a time.

Place heaviest items in the lowes drawers.

This is a permanent label. Do not remove!

Cam Lock Fastening System

Insert the cam bolt into the hole first, then insert the cam lock and lock it.

1.

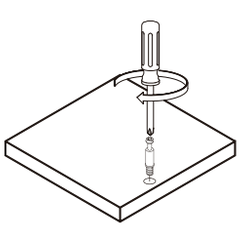

2.

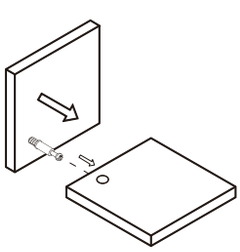

3.

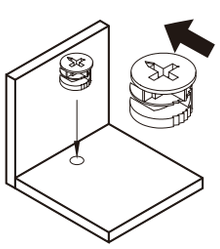

The opening must point toward the edge of the board

4.

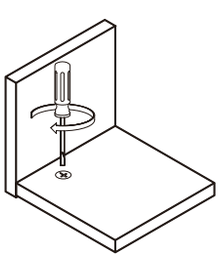

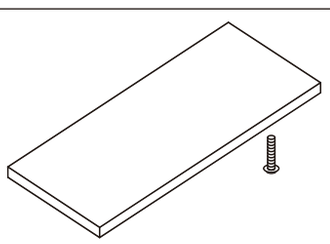

Be sure to use the proper screws to avoid damaging the parts.

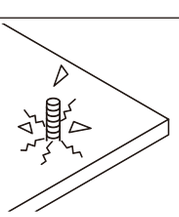

Wrong screws can cause the plank to crack

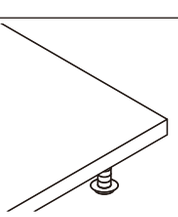

The right screw is the right size

Please check that you have all the parts listed before starting assembly, if you find something missing, please stop the assembly and contact us immediately.

Parts List

Pls make sure all the accesories are complete!

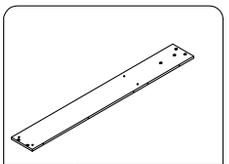	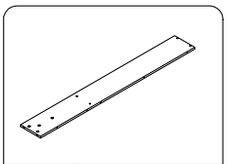	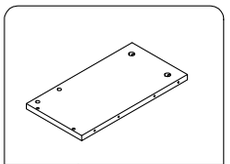	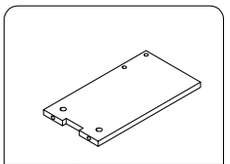	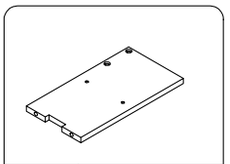
1 1PC	2 1PC	3 1PC	4 1PC	5 1PC
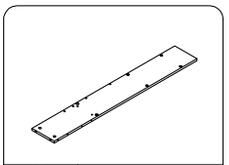	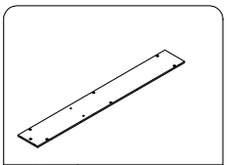	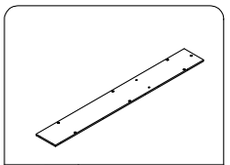	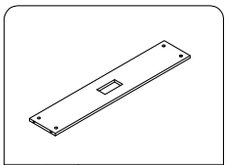	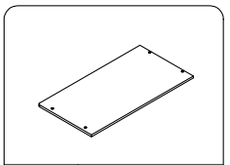
6 1PC	7 1PC	8 1PC	9 1PC	10 1PC
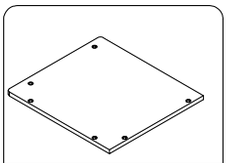	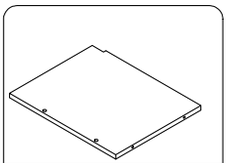	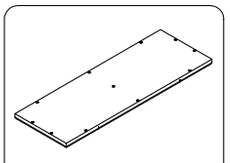	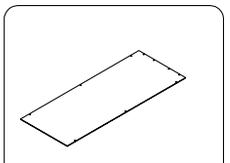	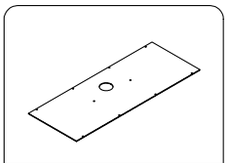
11 1PC	12 1PC	13 1PC	14 1PC	15 1PC
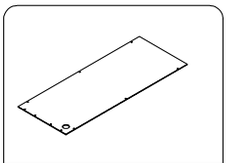	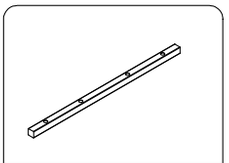	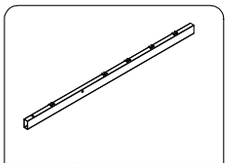	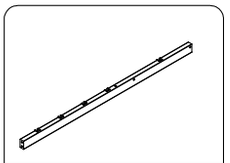	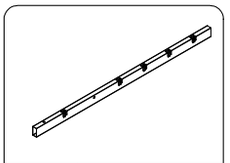
16 1PC	17 1PC	18 1PC	19 1PC	20 1PC
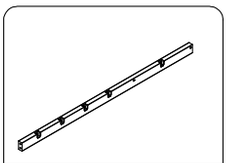	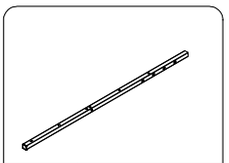	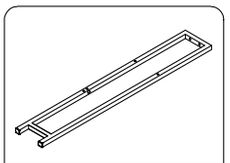	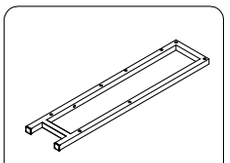	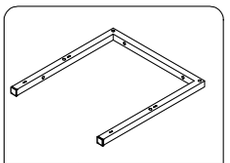
21 1PC	22 1PC	23 1PC	24 1PC	25 1PC
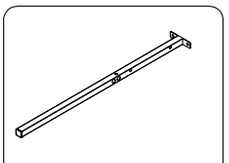	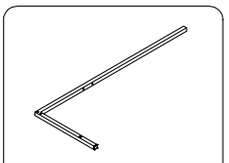	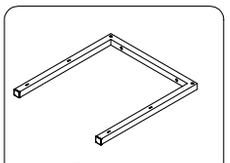	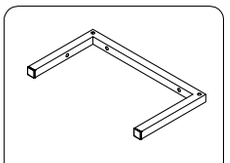	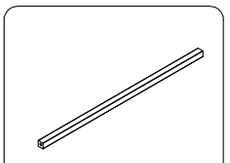
26 1PC	27 1PC	28 1PC	29 1PC	30 2PCS

Parts List

Pls make sure all the accesories are complete!

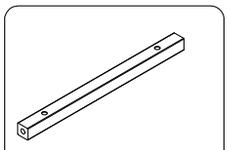

31	2PCS

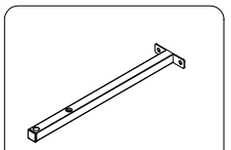

32	2PCS

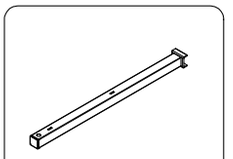

33	2PCS

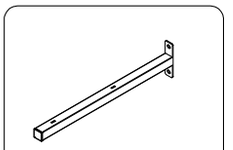

34	3PCS

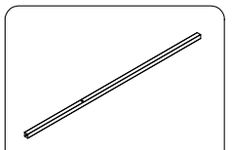

35	3PCS

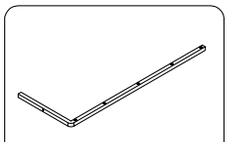

36	1PC

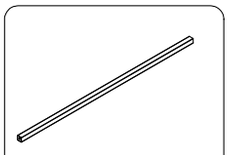

37	1PC

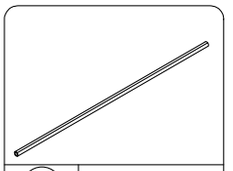

38	3PCS

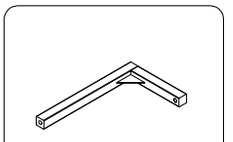

39	2PCS

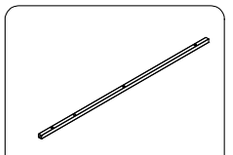

40	2PCS

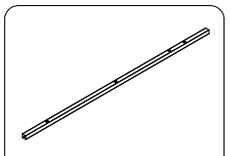

41	2PCS

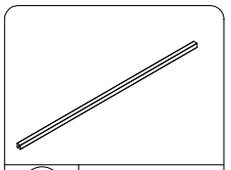

42	1PC

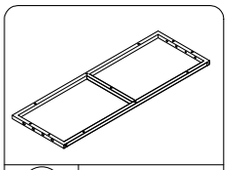

43	1PC

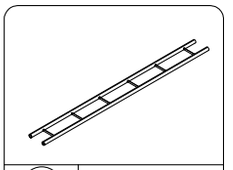

44	2PCS

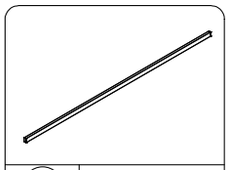

45	10PCS

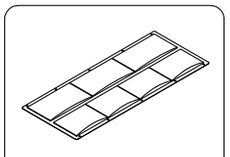

46	1PC

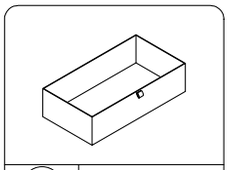

47	2PCS

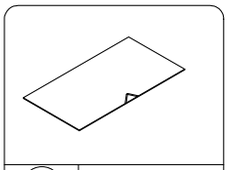

48	2PCS

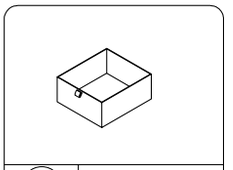

49	1PC

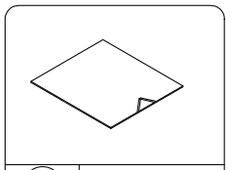

50	1PC

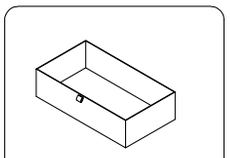

51	6PCS

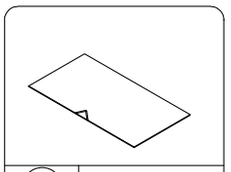

52	6PCS

Parts List

Pls make sure all the accesories are complete!

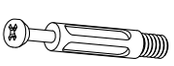 M6*35mm A 12+2PCS	 Ø12mm B 12+2PCS	 M6*30mm C 4+1PCS	 M6.3*50mm D 10+2PCS	 M6*50mm E 2+1PCS
 M6mm F 4+1PCS	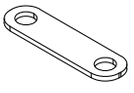 G 3PCS	 M3.5*12mm H 2+2PCS	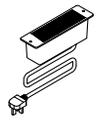 I 1PC	 M4*12mm J 30+2PCS
 M6*12mm K 46+2PCS	 M6*23mm L 12+2PCS	 M6*28mm M 72+4PCS	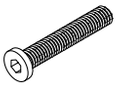 M6*35mm N 6+1PCS	 M6*50mm O 3+1PCS
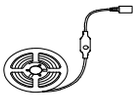 P 1PC	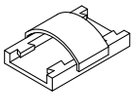 Q 6+1PCS	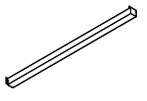 R 9PCS	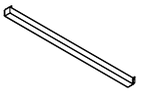 S 9PCS	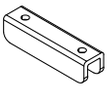 T 2PCS
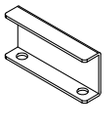 U 2PCS	 V 38+2PCS	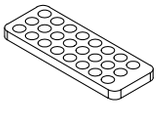 W 1PC	 M4*30mm X 4+1PCS	 Y 1PC
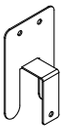 Z 2PCS	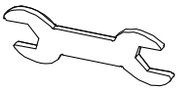 AA 1PC			

Assembly Mode

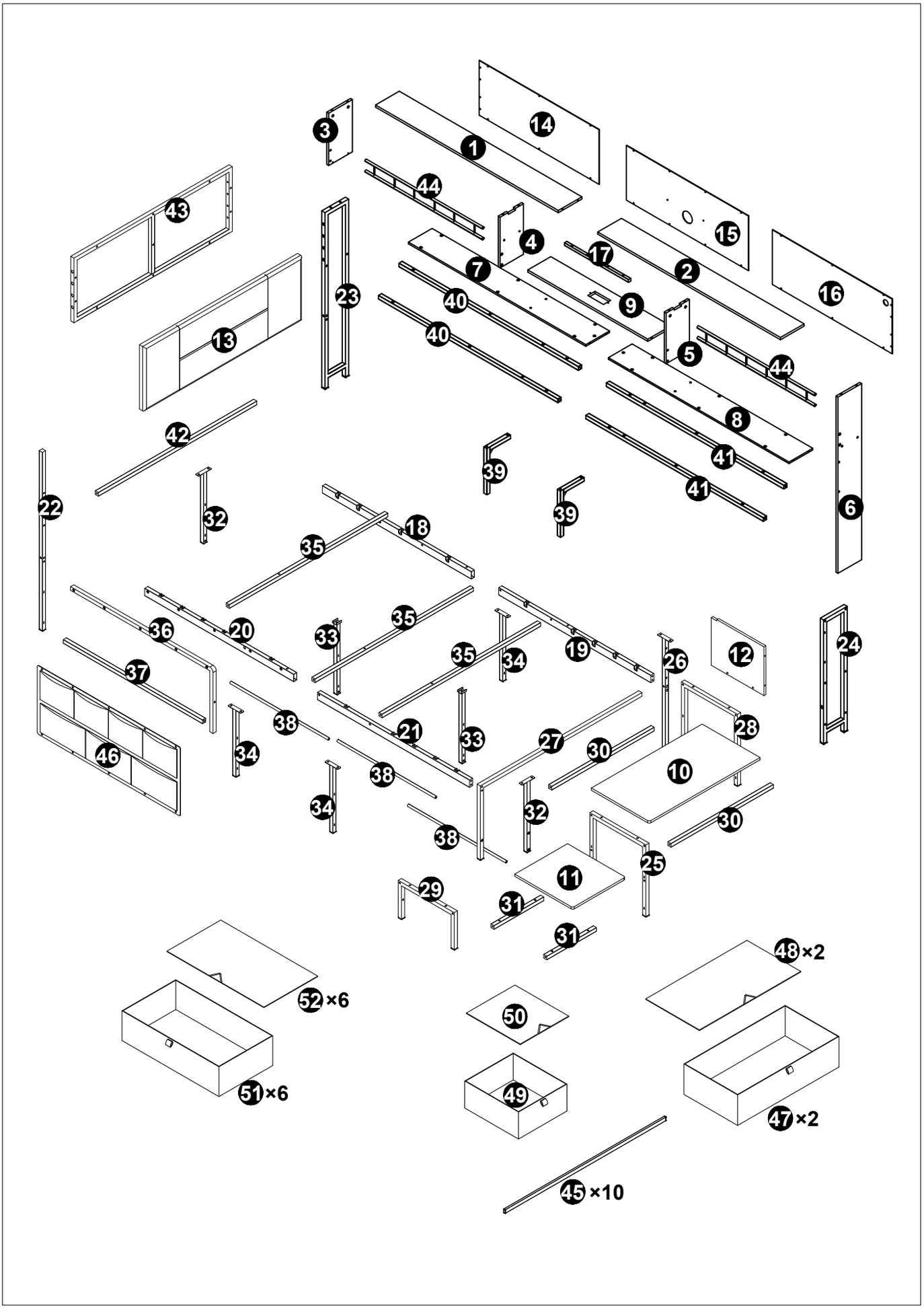

1

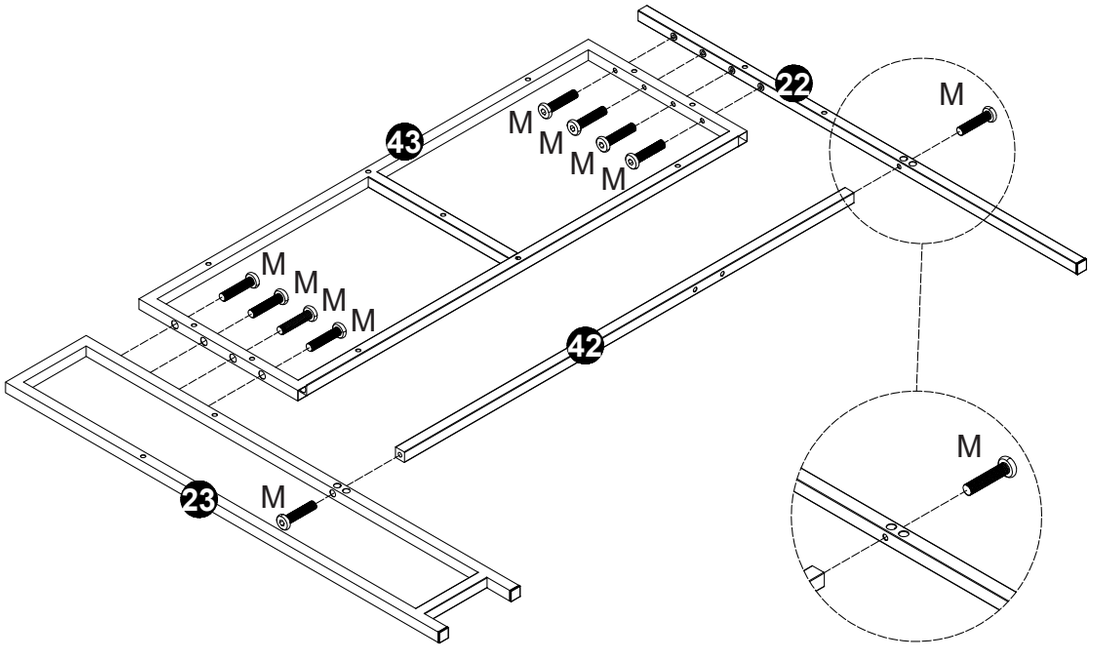



M6*28mm	
M	10PCS

2

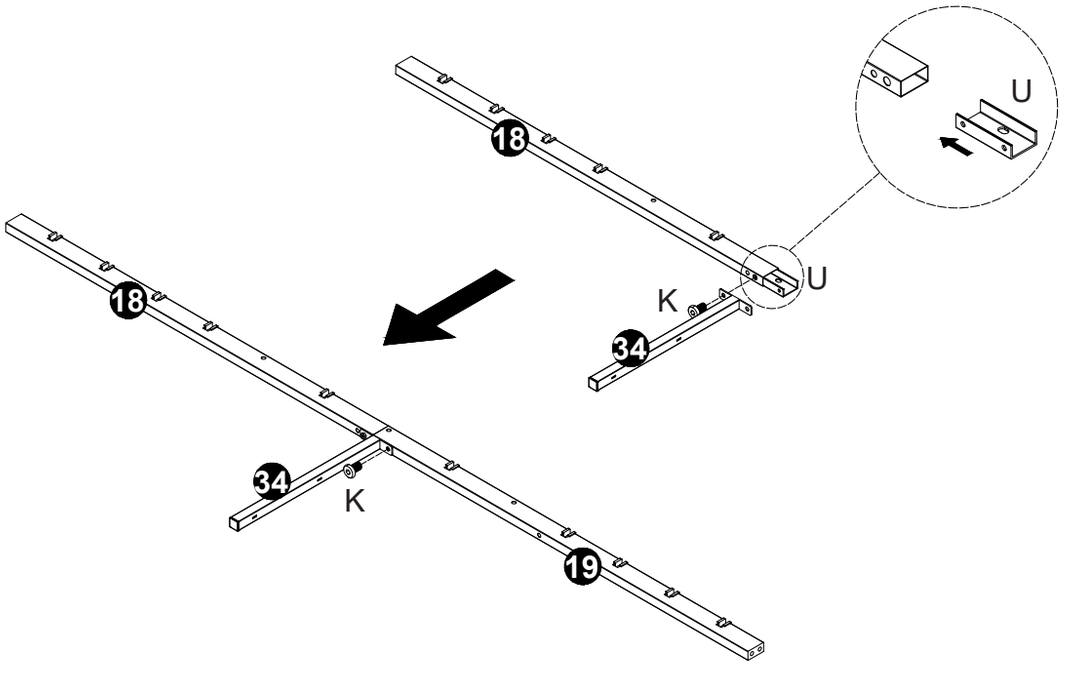



M6*12mm	
K	2PCS



U	1PC

3

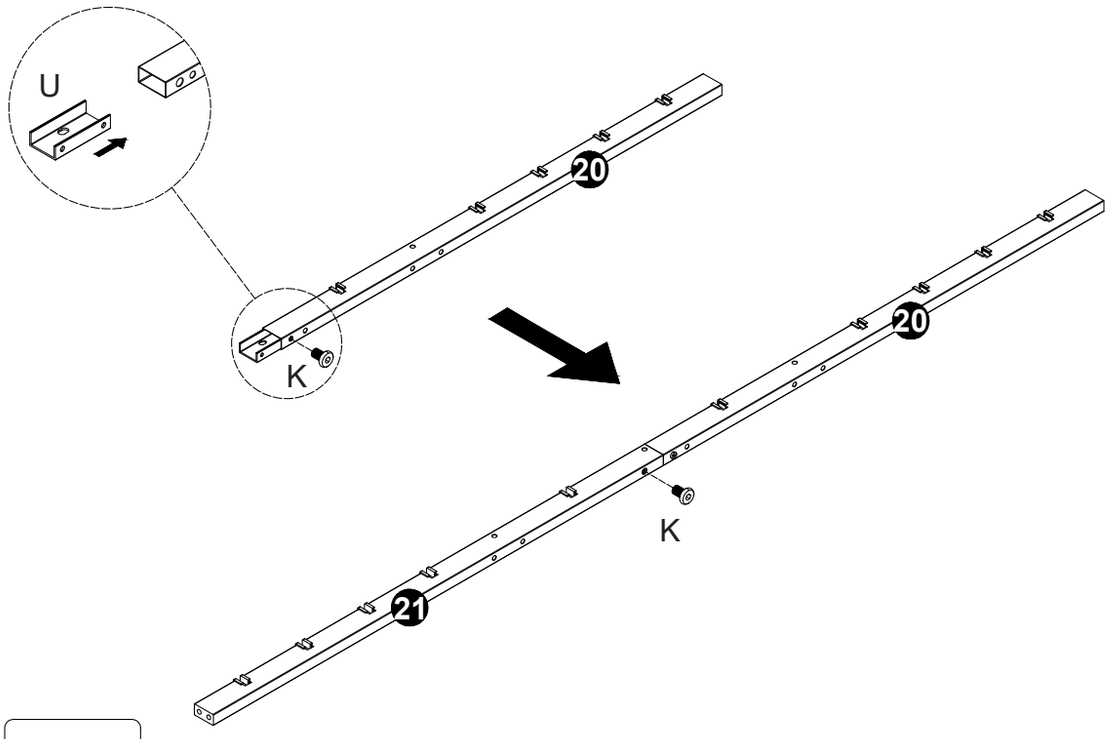

M6*12mm	
K	2PCS

U	1PC

4

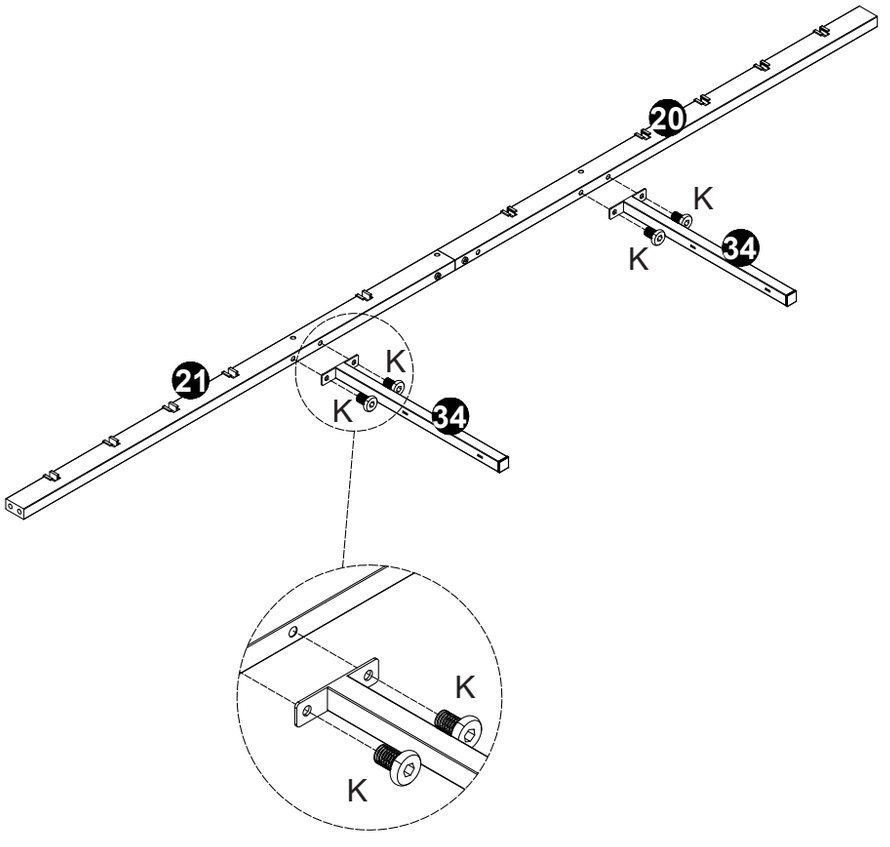

M6*12mm	
K	4PCS

5

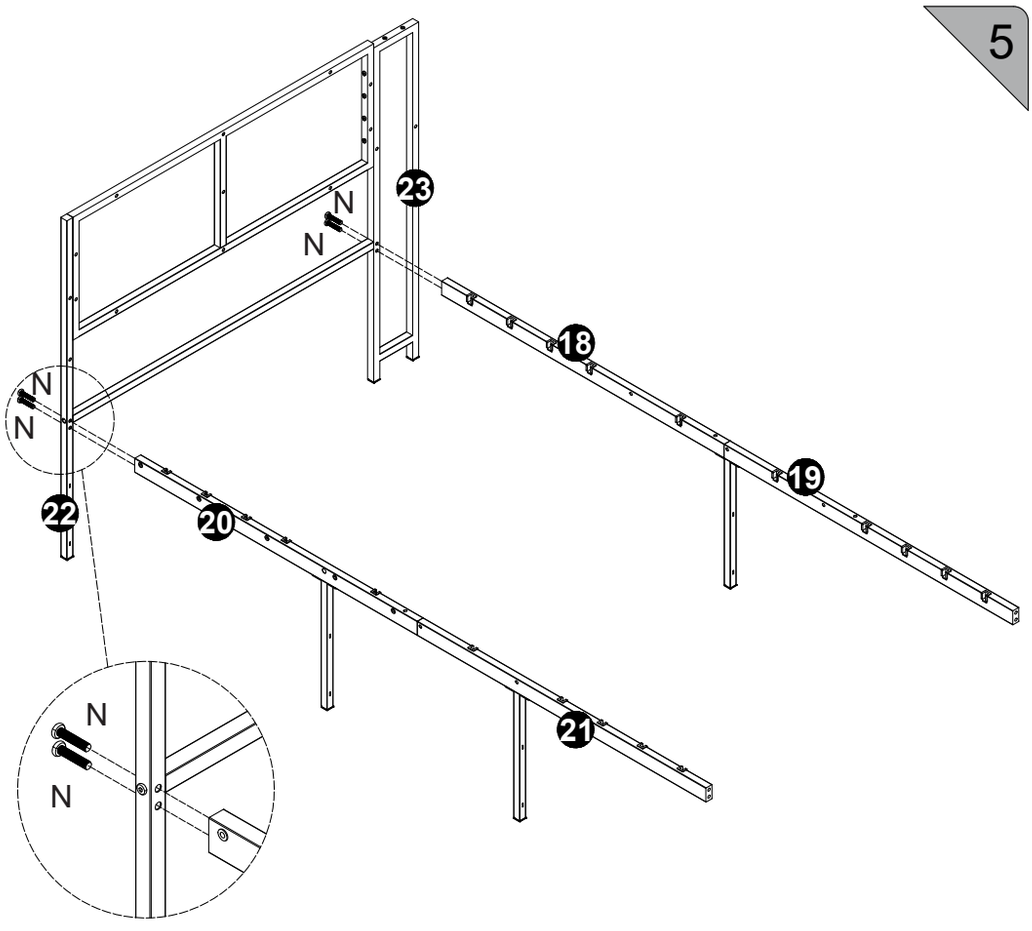



M6*35mm	
N	4PCS

6

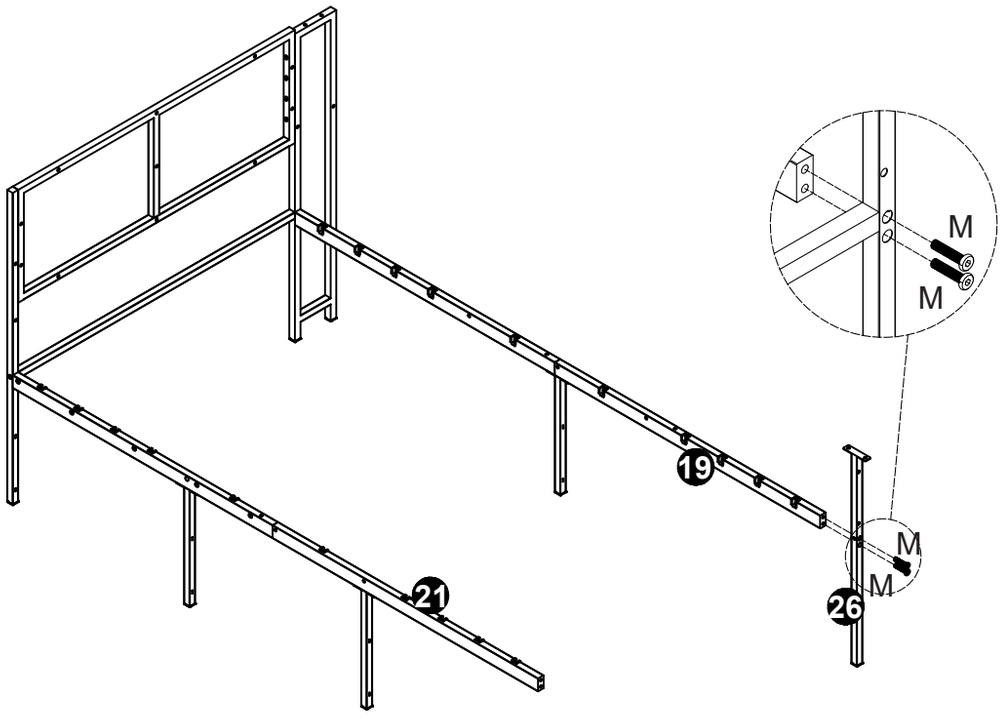



M6*28mm	
M	2PCS

7

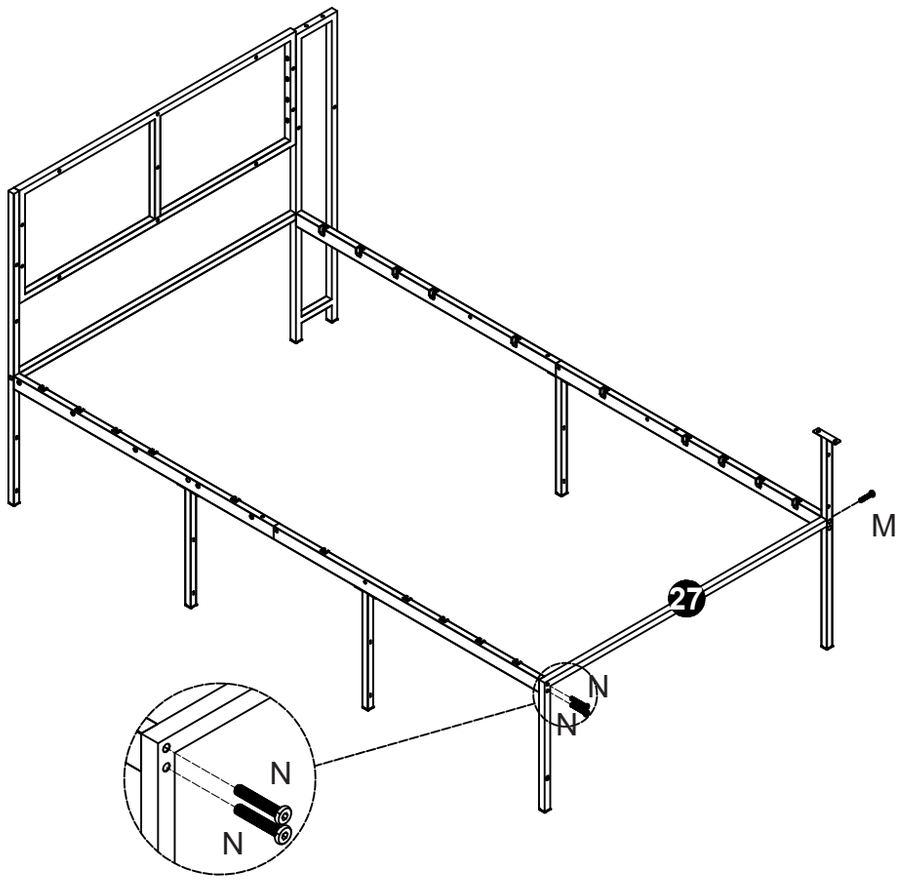



M6*28mm	
M	1PC



M6*35mm	
N	2PCS

8

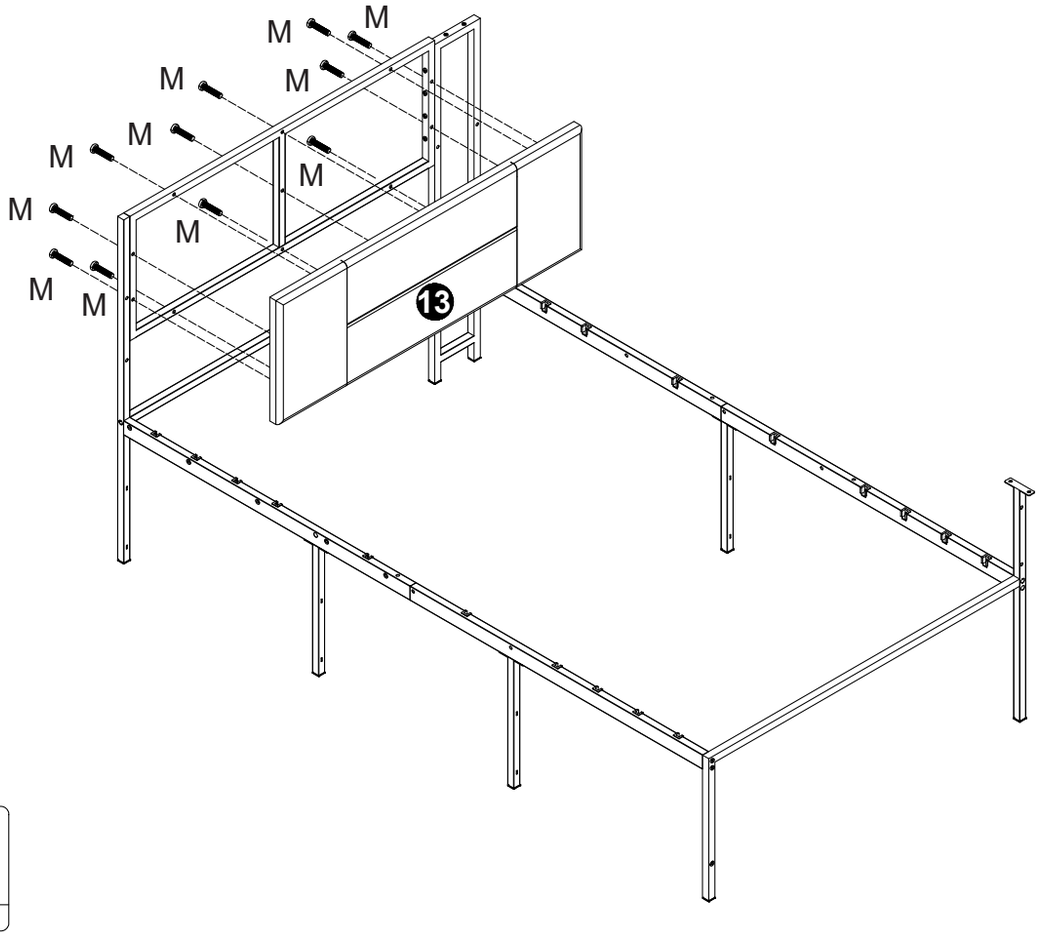



M6*28mm	
M	11PCS

9

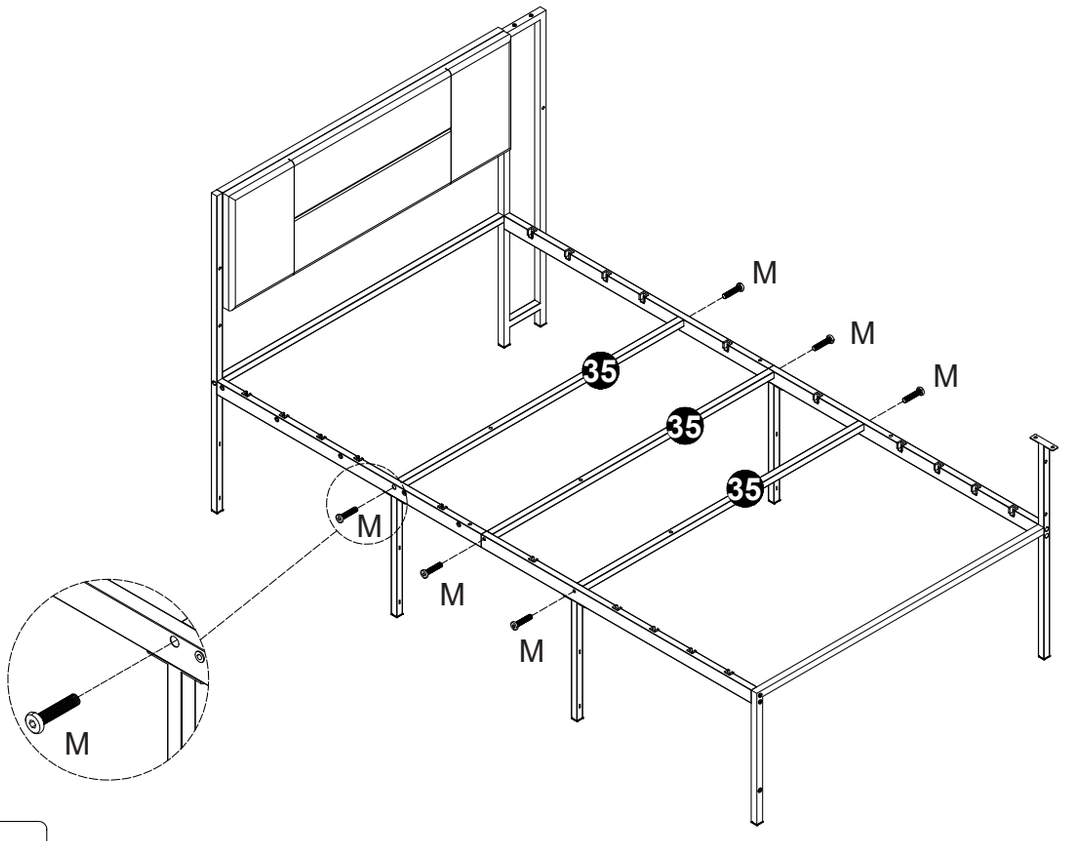



M6*28mm	
M	6PCS

10

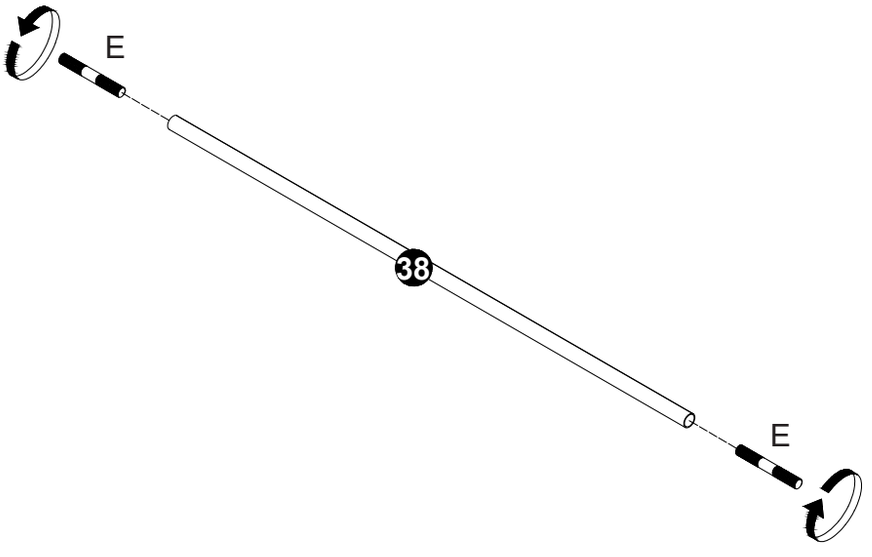



M6*50mm	
E	2PCS

11

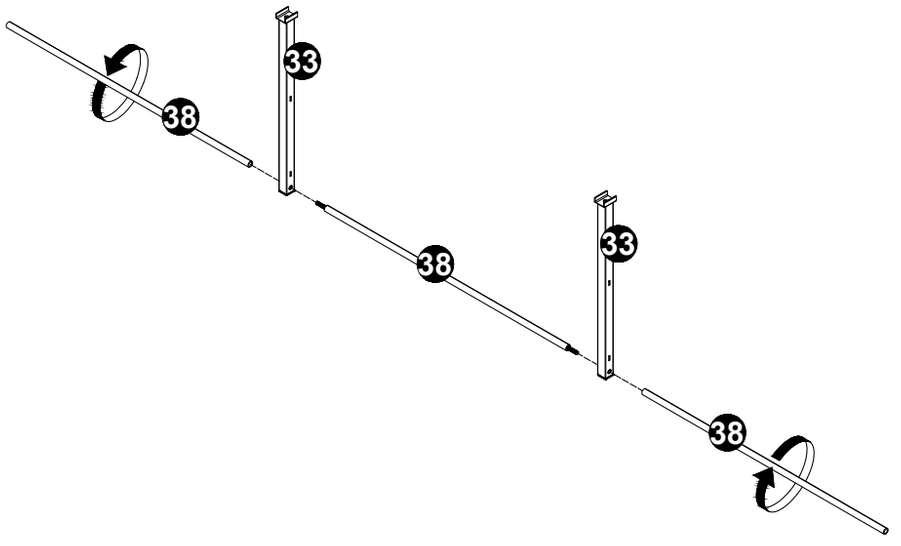

12

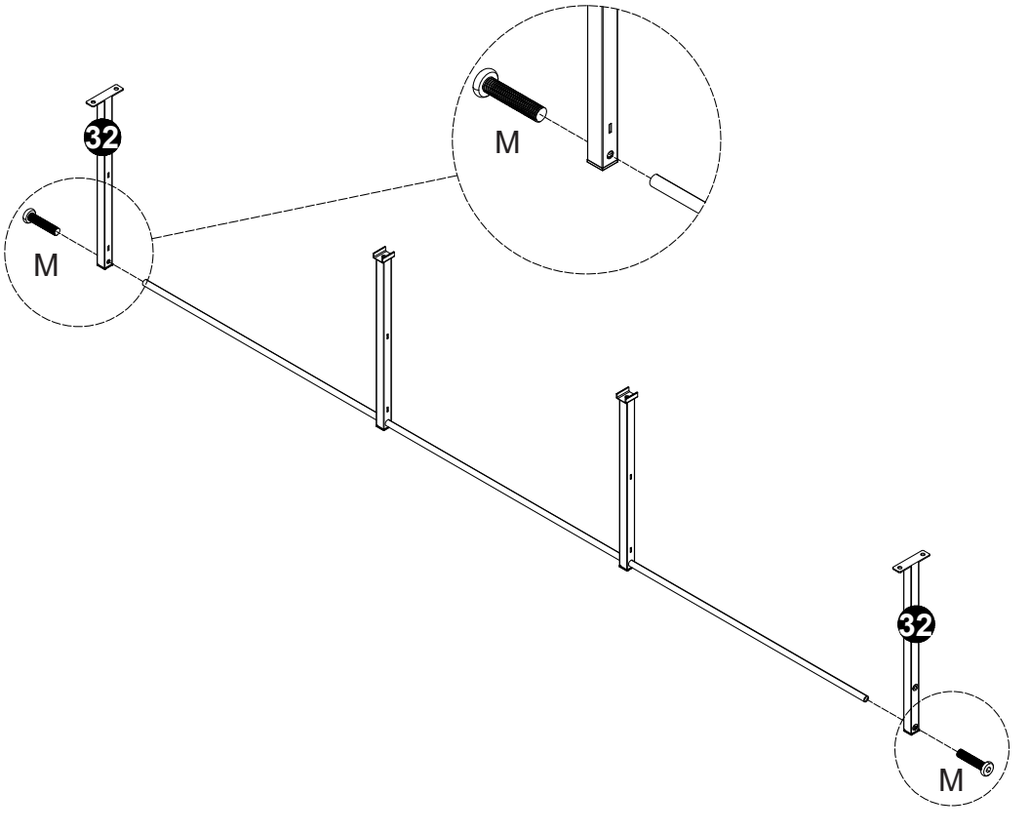



M6*28mm	
M	2PCS

13

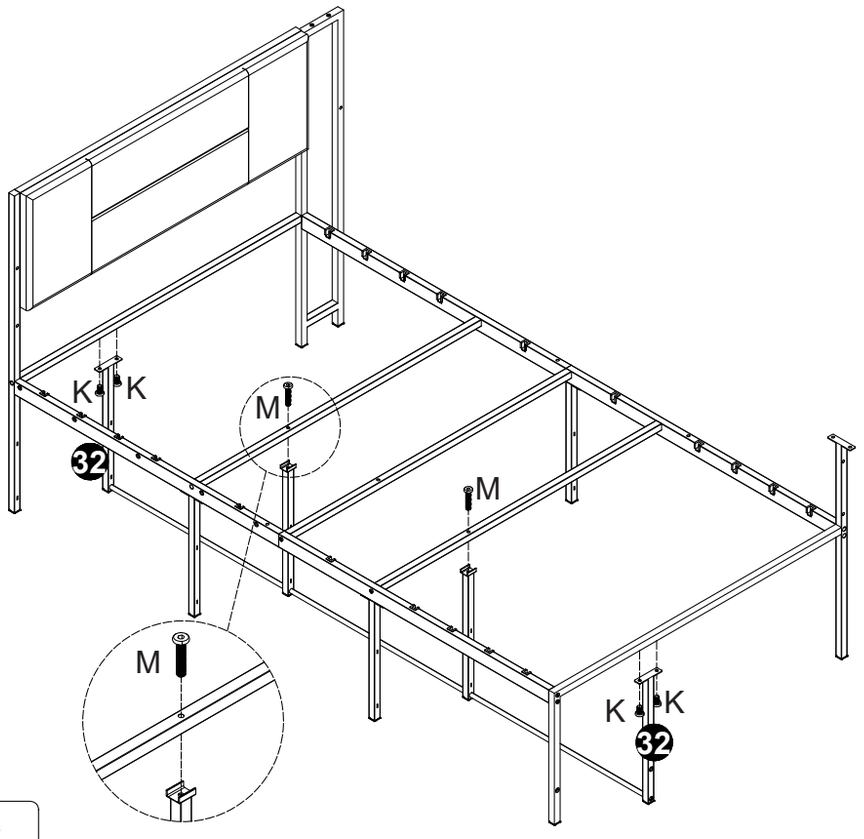

M6*12mm	
K	4PCS

M6*28mm	
M	2PCS

14

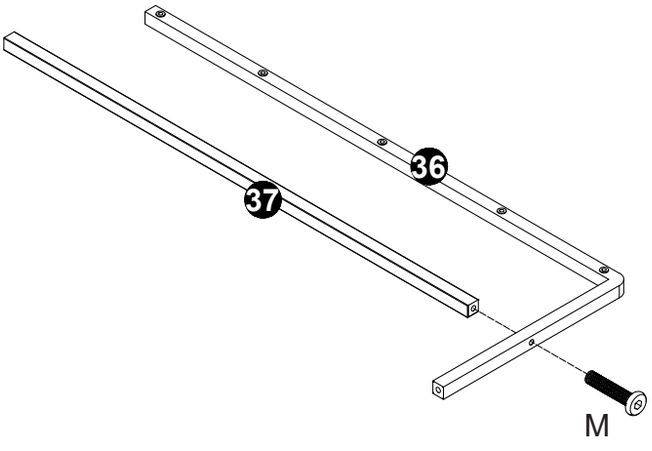

M6*28mm	
M	1PC

15

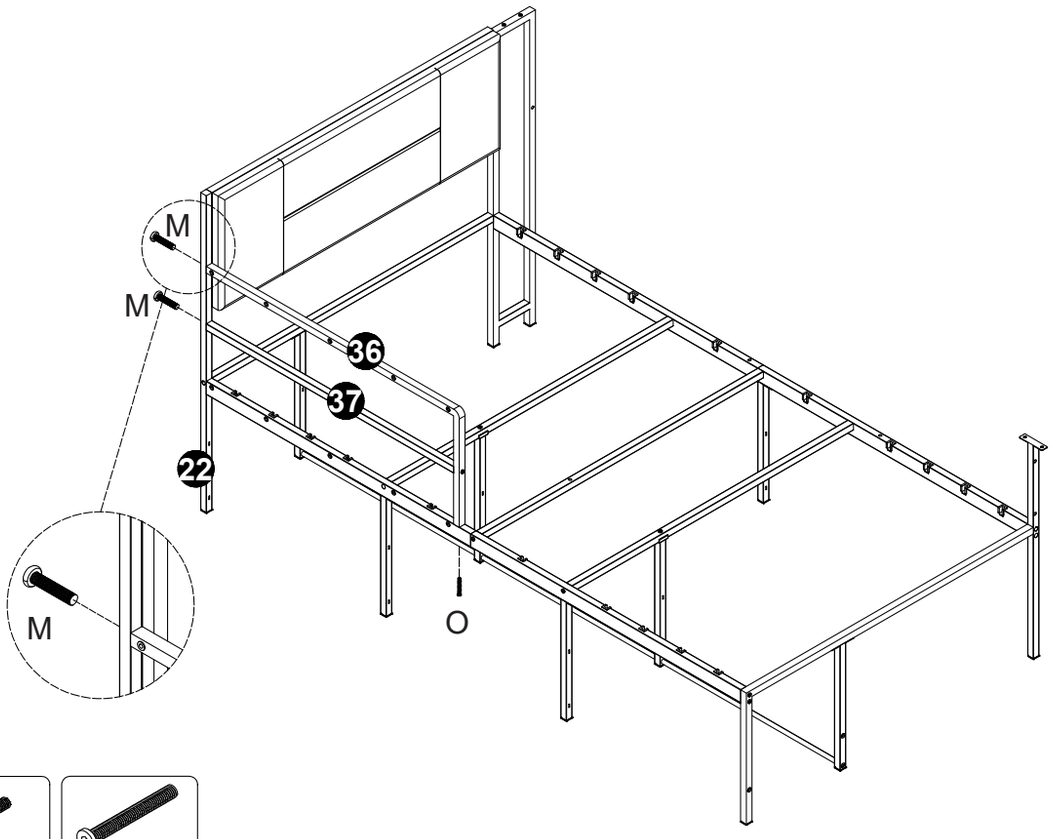

M6*28mm	
M	2PCS

M6*50mm	
O	1PC

16

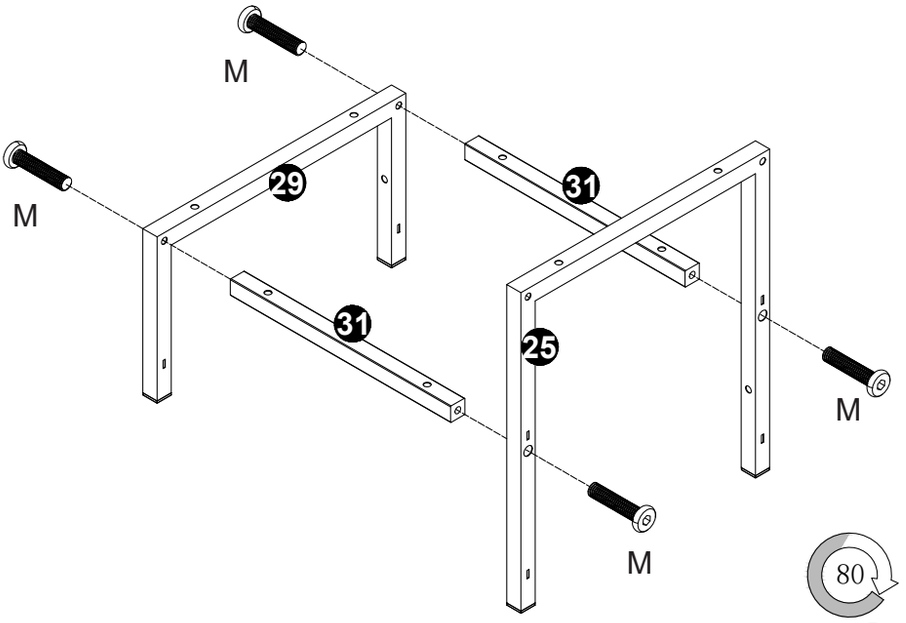

Please tighten the screws to 80% first.

M6*28mm	
M	4PCS

17

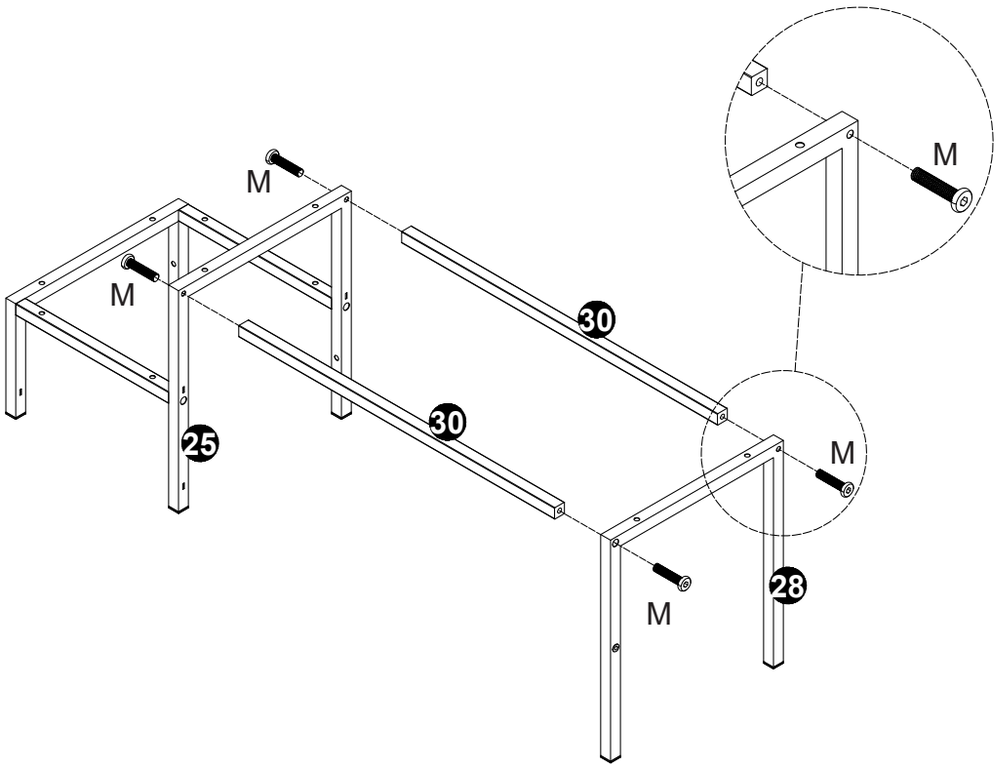



M6*28mm	
M	4PCS

18

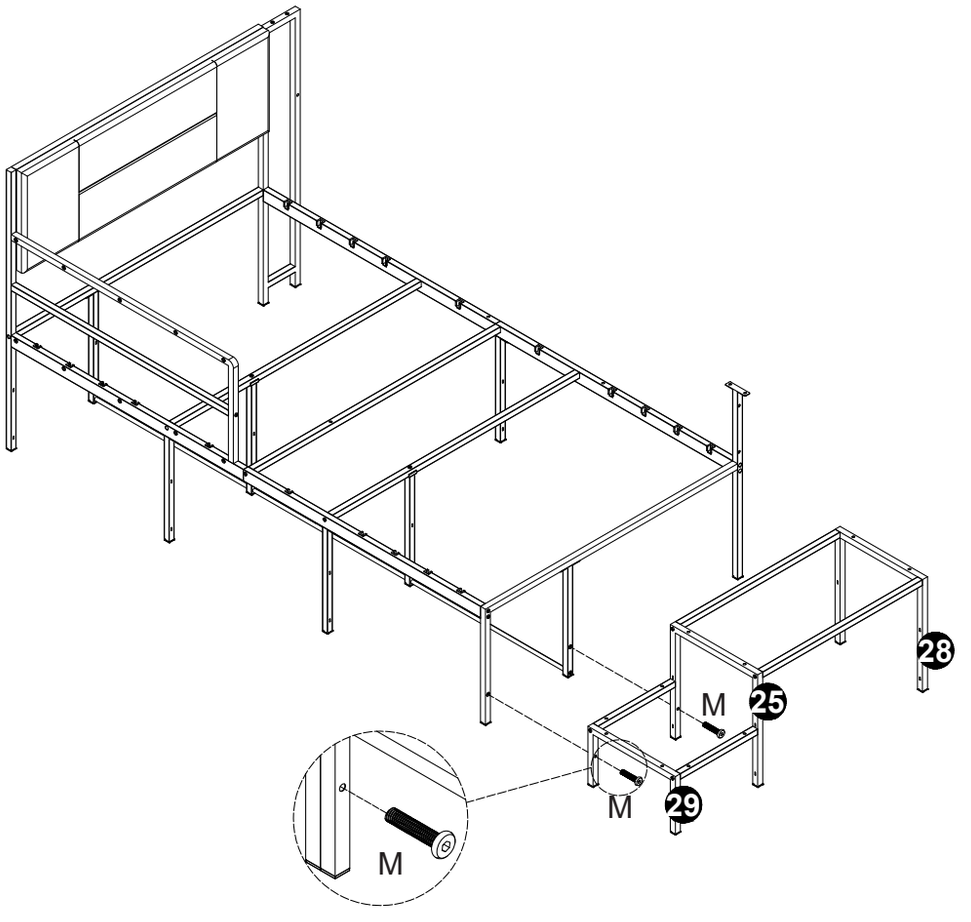

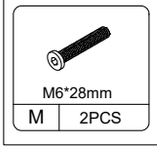

M6*28mm	
M	2PCS

19

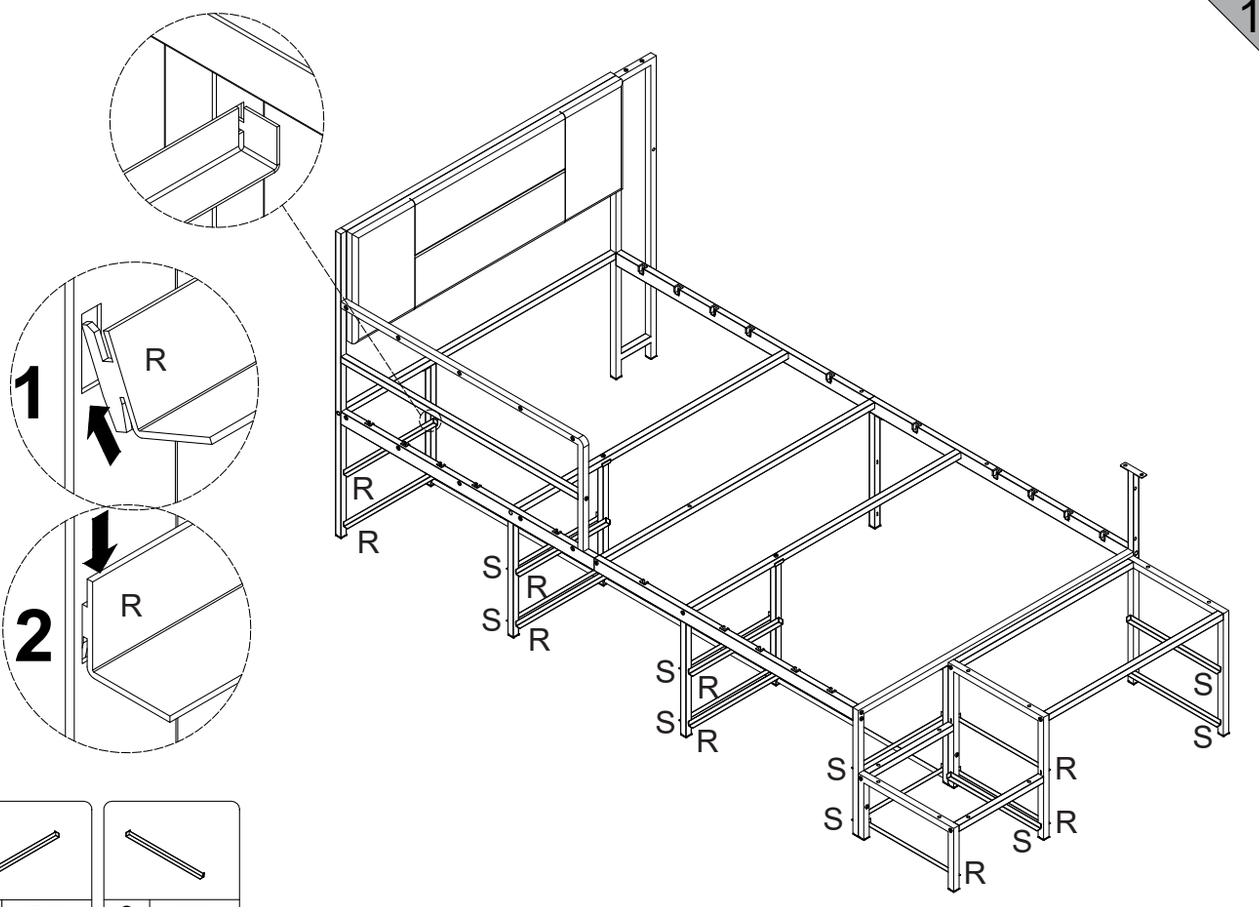

R	9PCS
S	9PCS

20

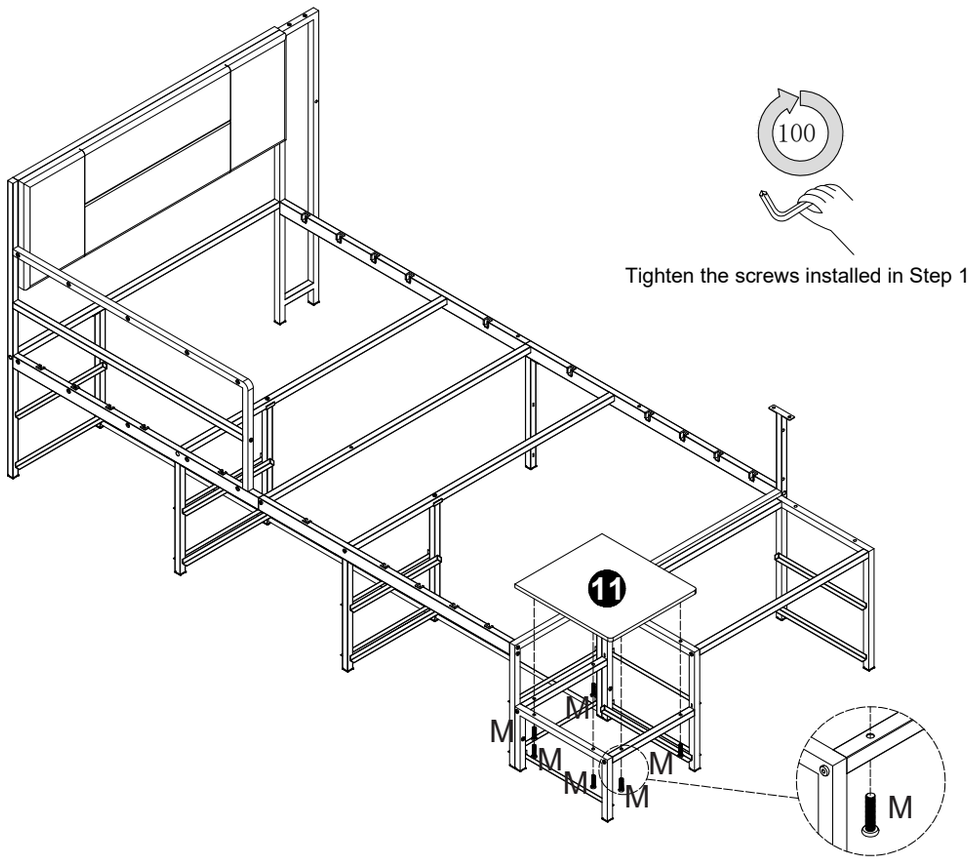

Tighten the screws installed in Step 16 altogether.



M6*28mm	
M	6PCS

21

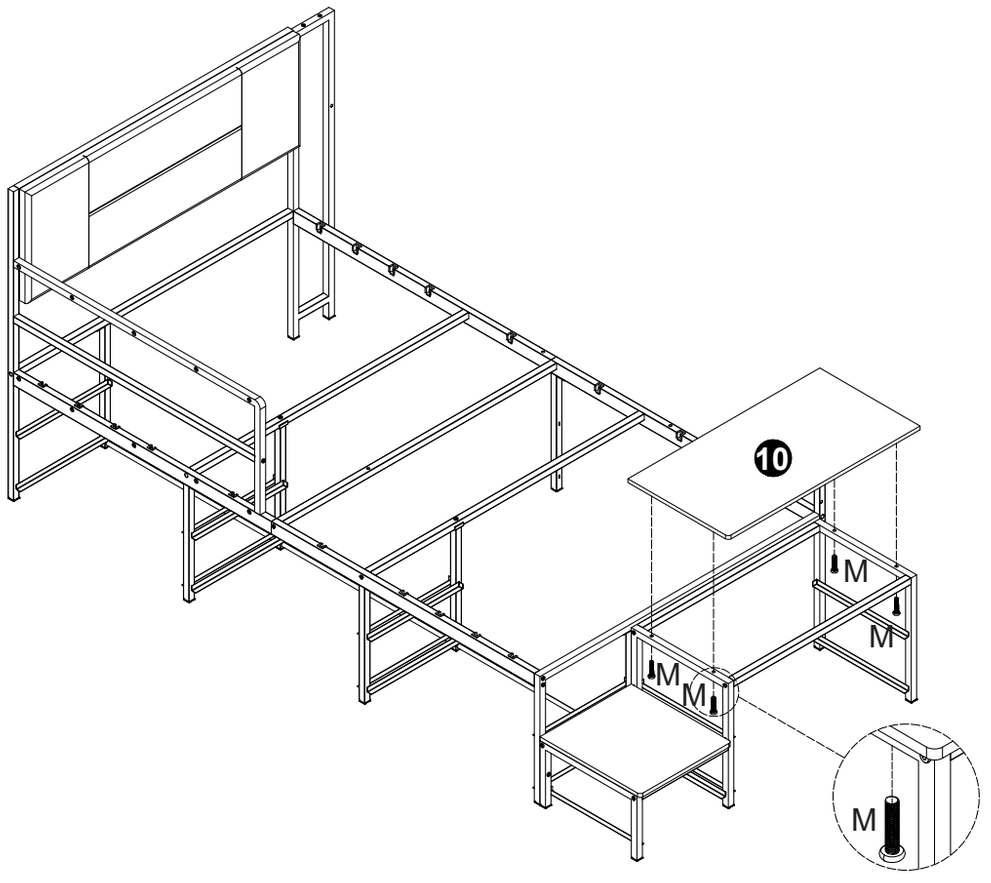

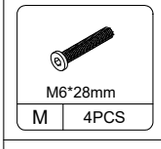

M6*28mm	
M	4PCS

22

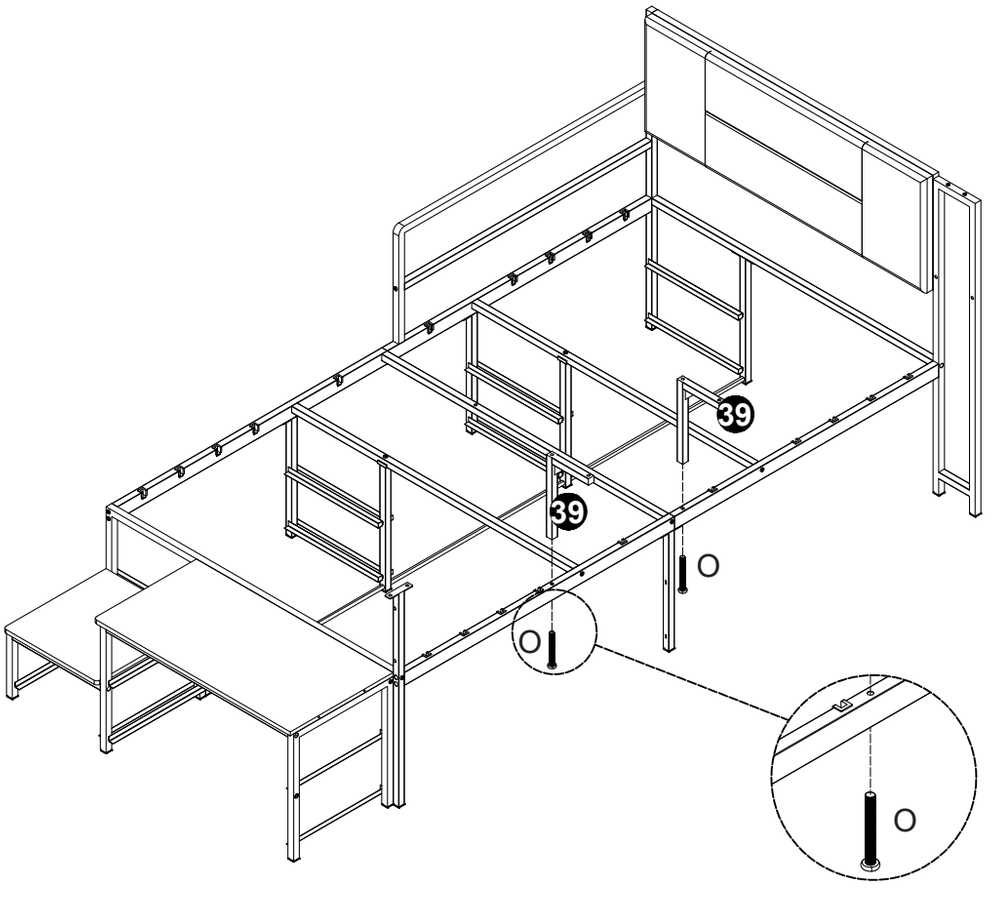



M6*50mm	
O	2PCS

23

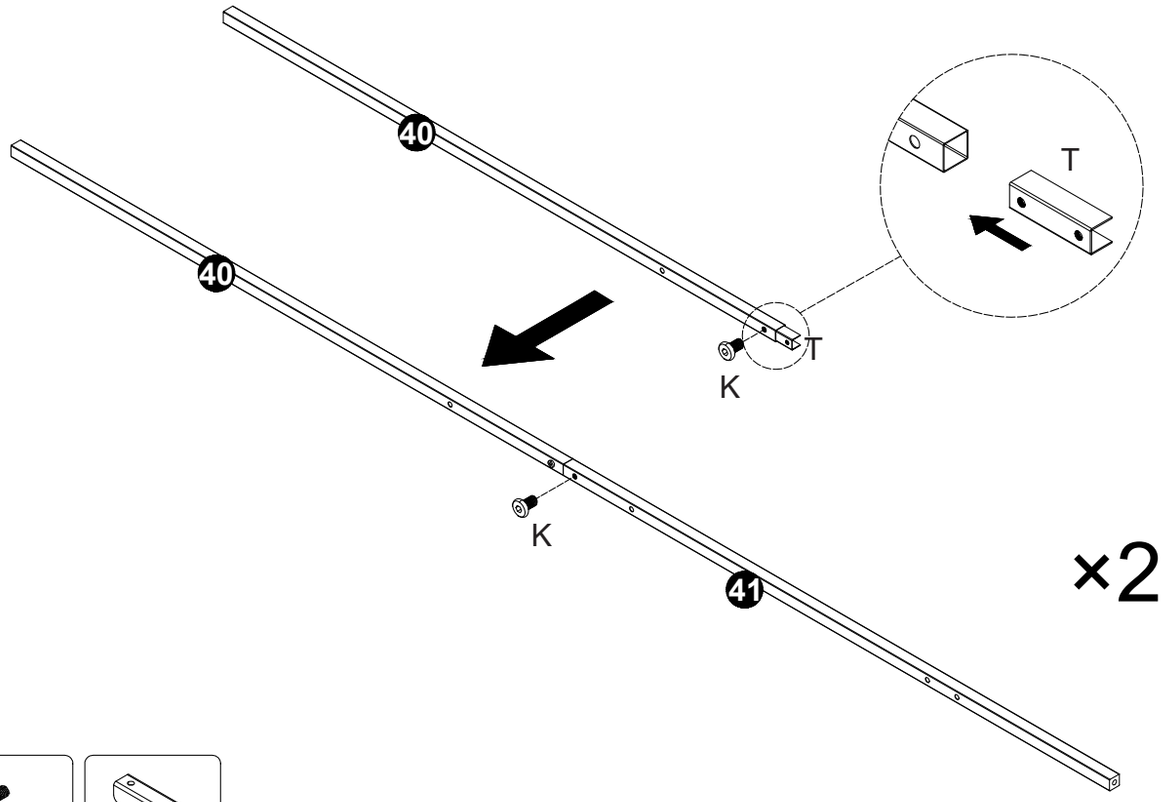

 M6*12mm	
K	4PCS

	
T	2PCS

24



Tighten the two screws of No.23 steel frame to 80% tightness only, do not fully fasten.

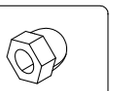	
F	2PCS

M6*12mm	
K	2PCS

M6*28mm	
M	6PCS

25

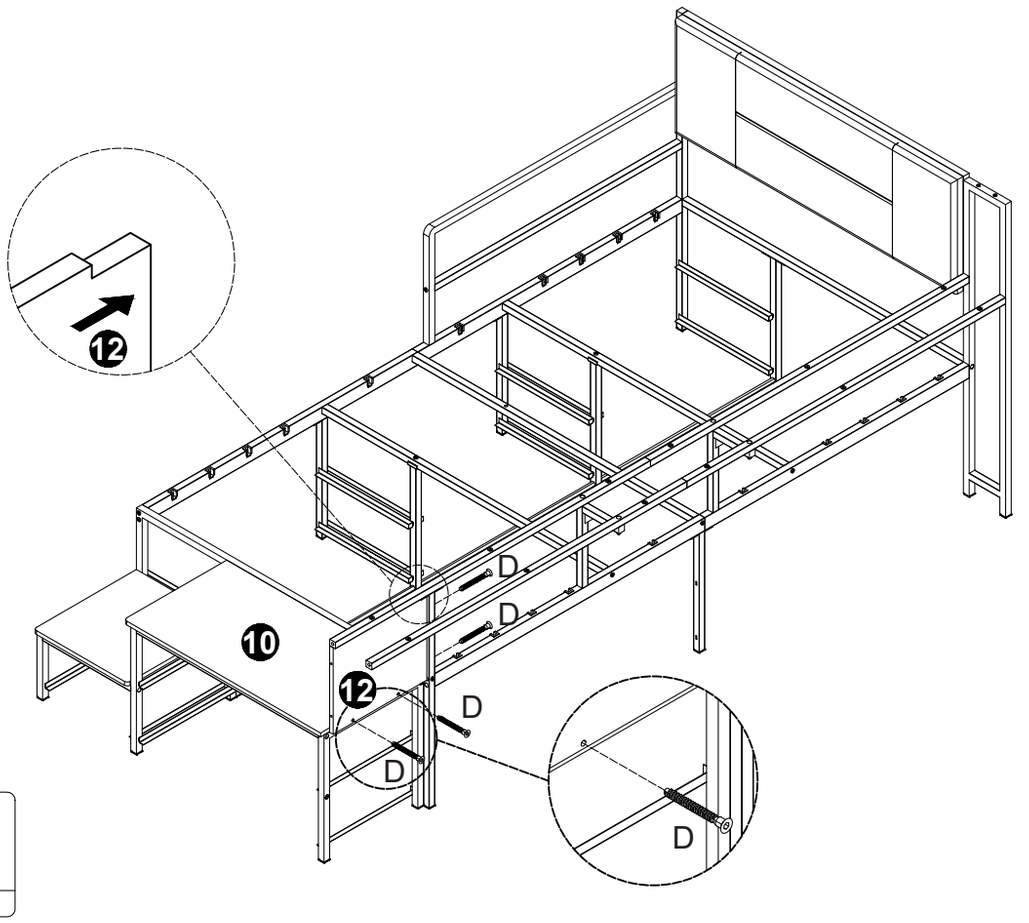

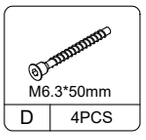

M6.3*50mm	
D	4PCS

26

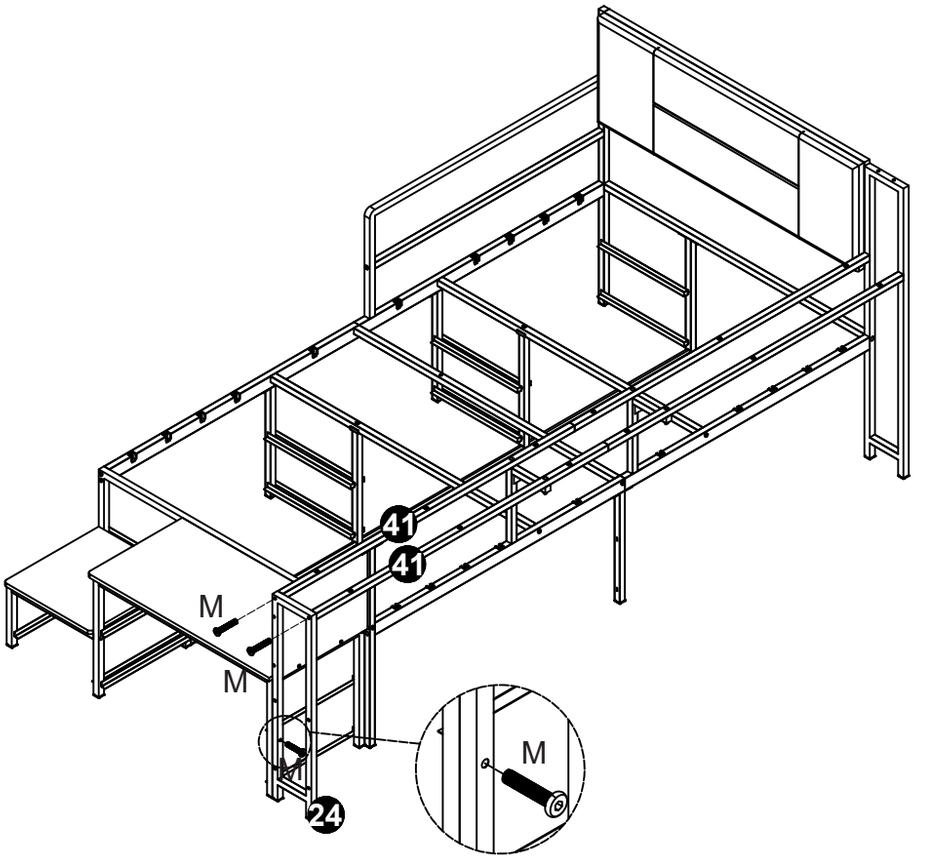



M6*28mm	
M	3PCS

27

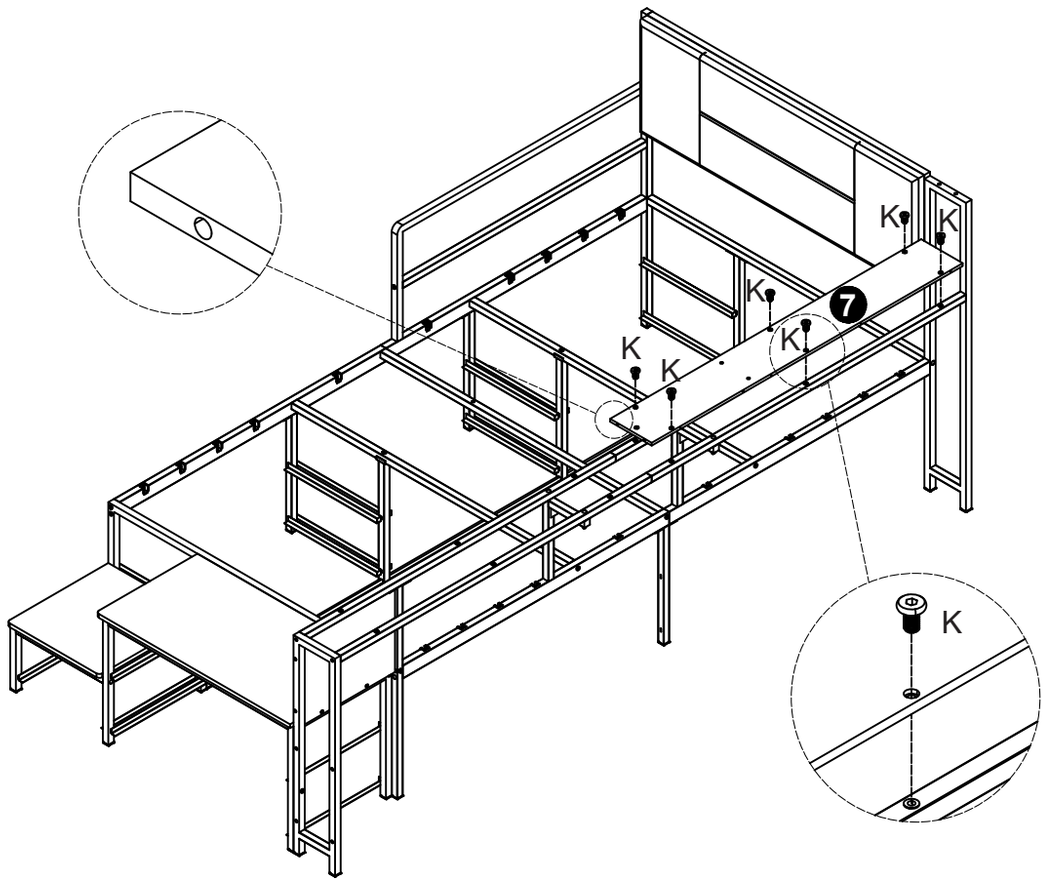



M6*12mm	
K	6PCS

28

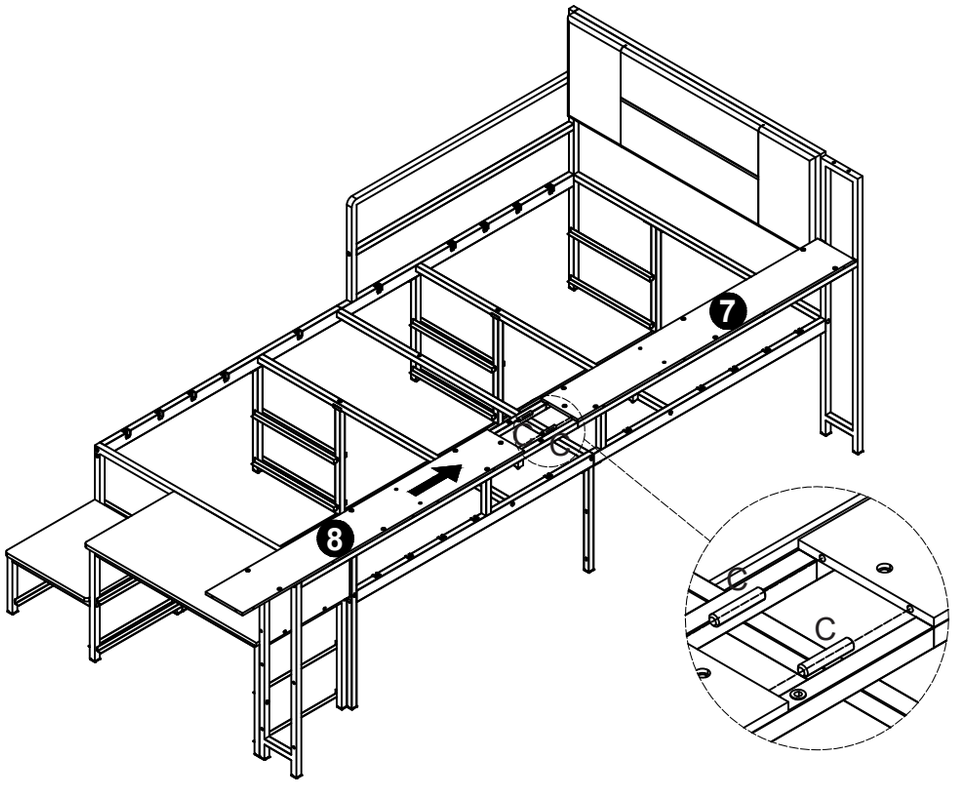



M6*30mm	
C	2PCS

29

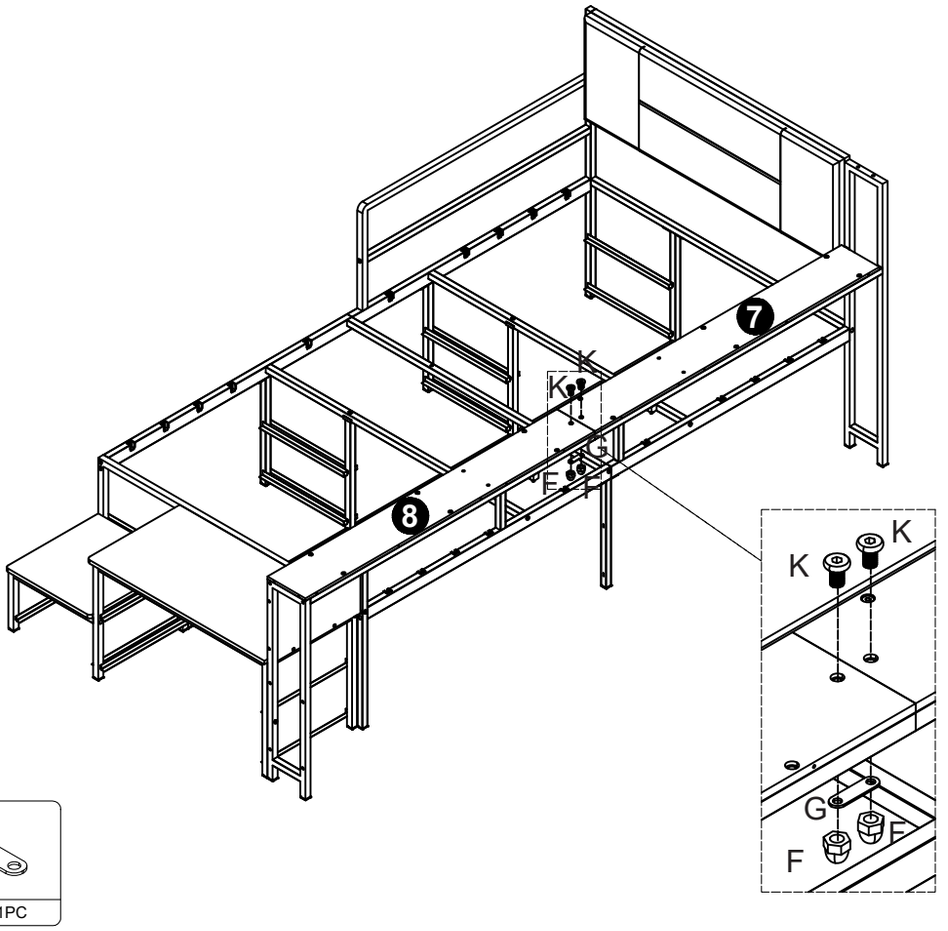

F	2PCS

M6*12mm	
K	2PCS

G	1PC

30

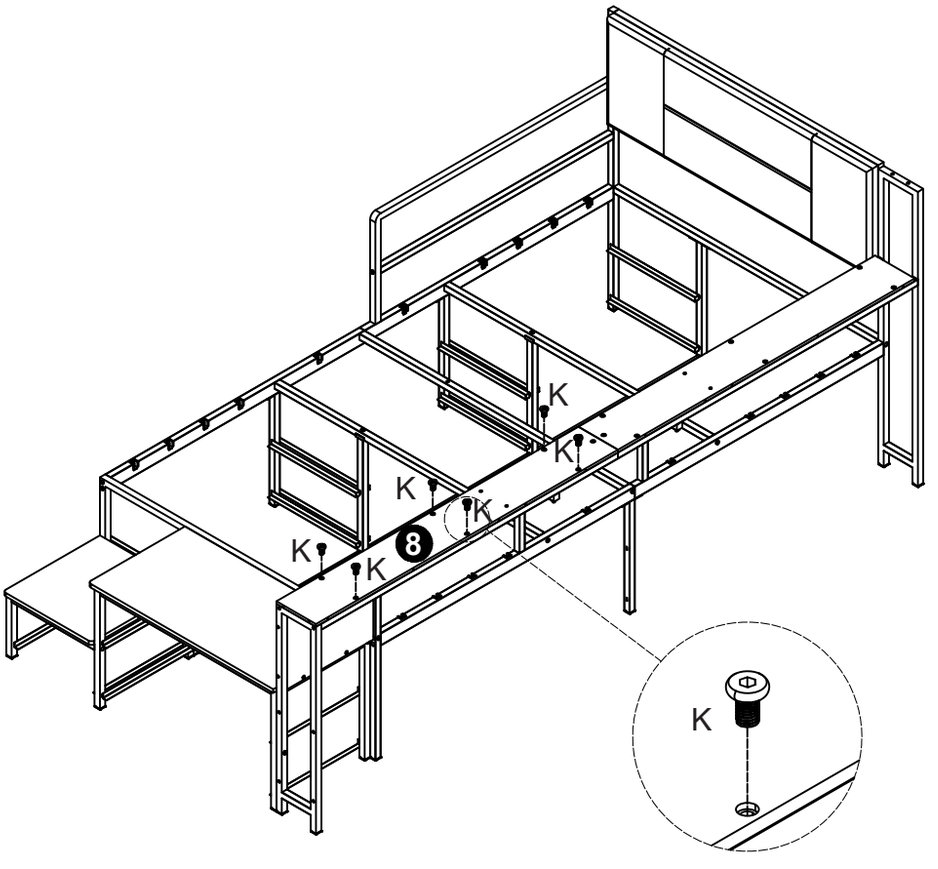

M6*12mm	
K	6PCS

31

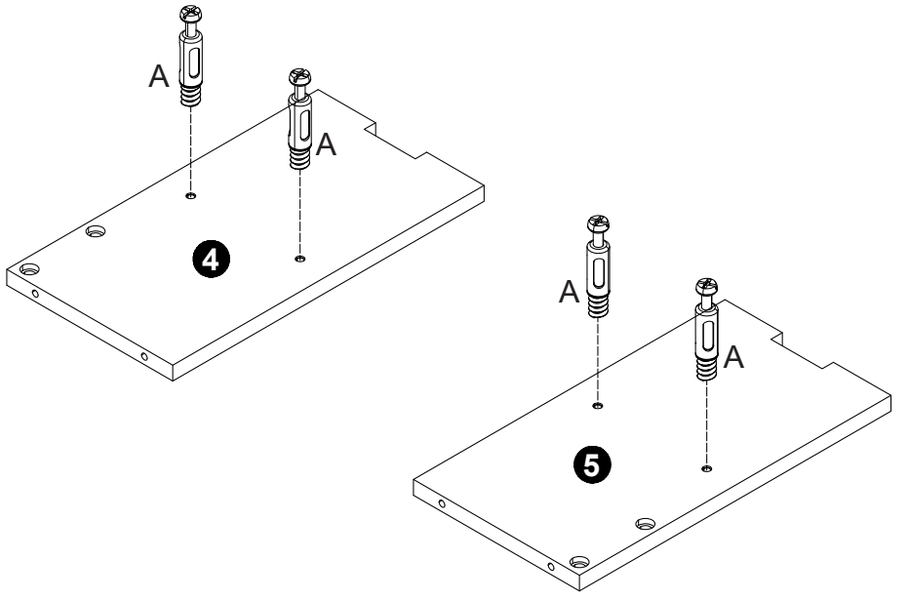

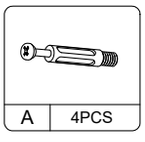

A	4PCS

32

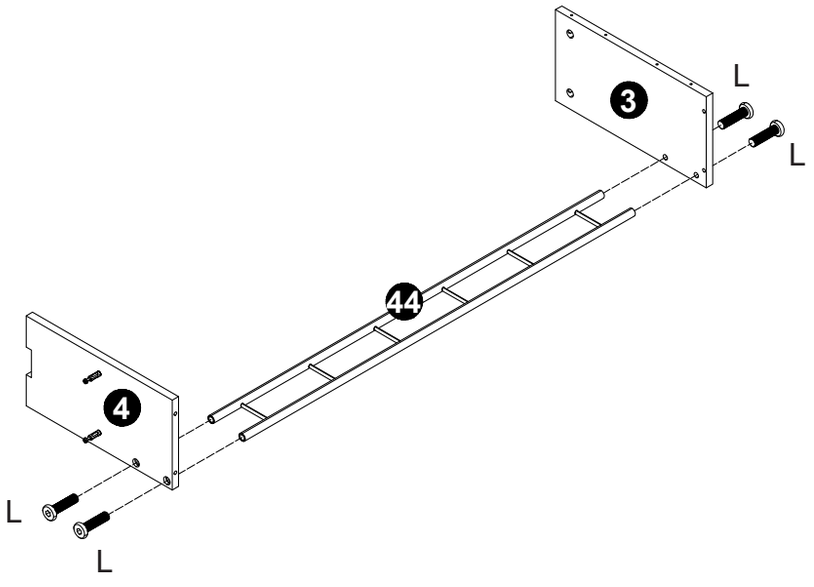



M6*23mm	
L	4PCS

33

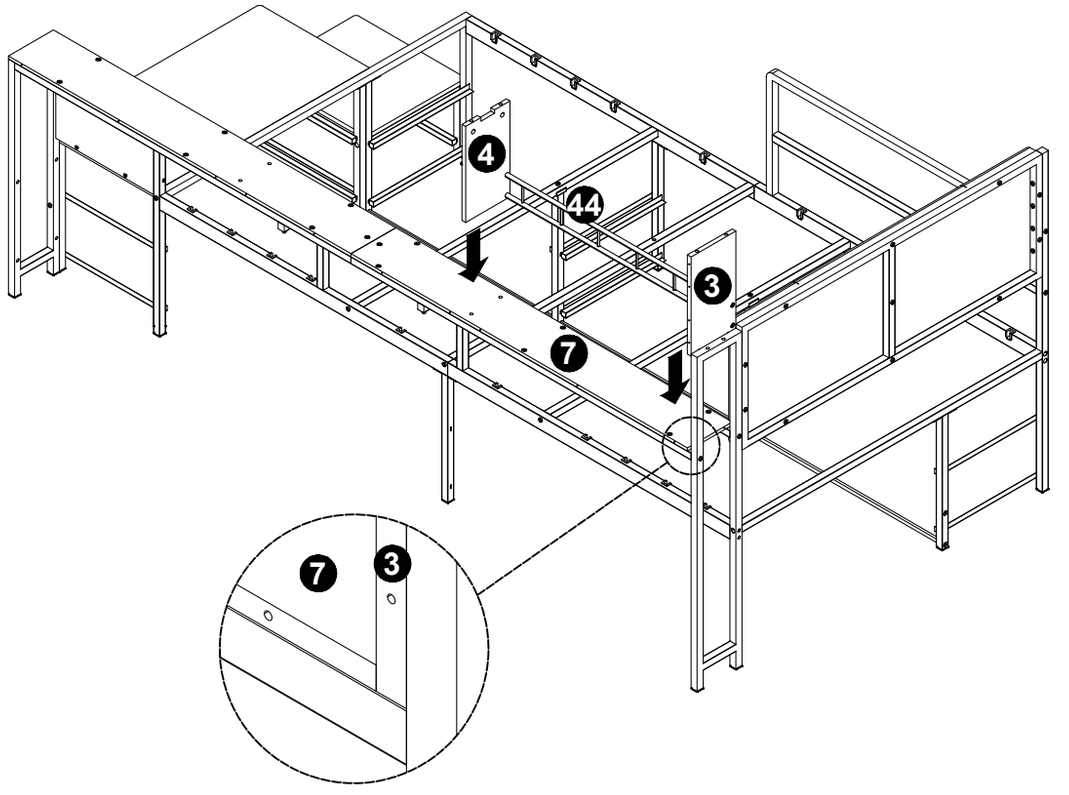

34

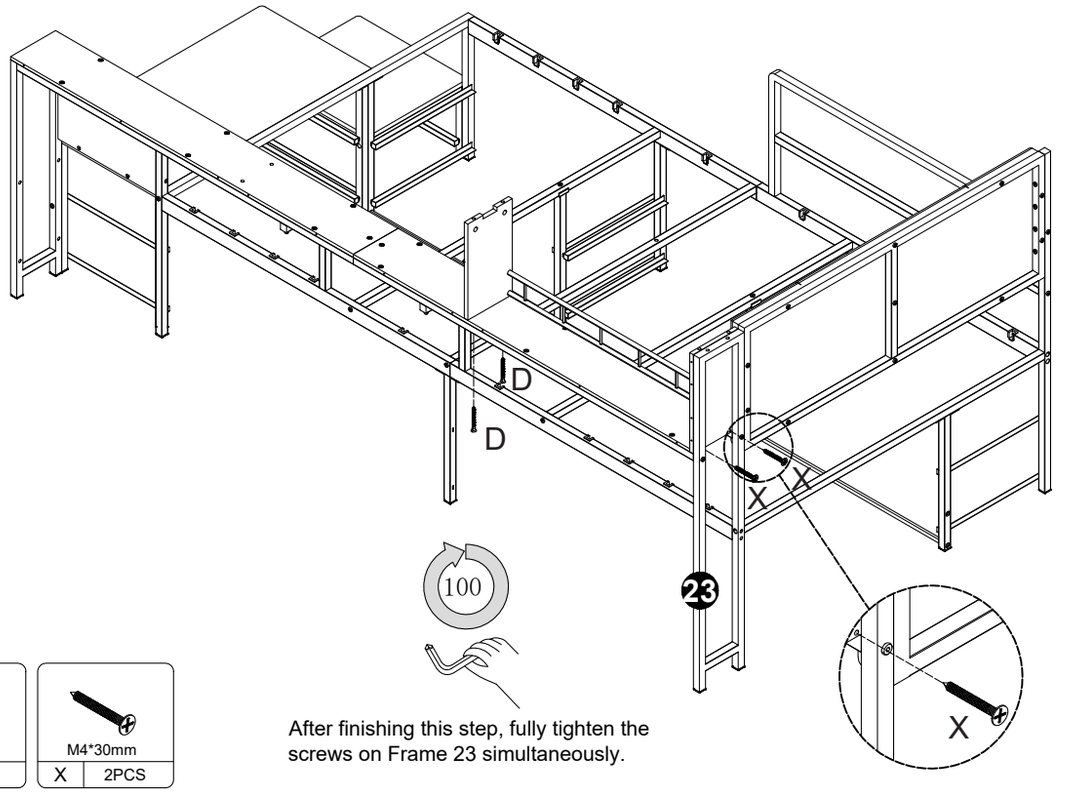

M6.3*50mm	
D	2PCS

M4*30mm	
X	2PCS

After finishing this step, fully tighten the screws on Frame 23 simultaneously.

35

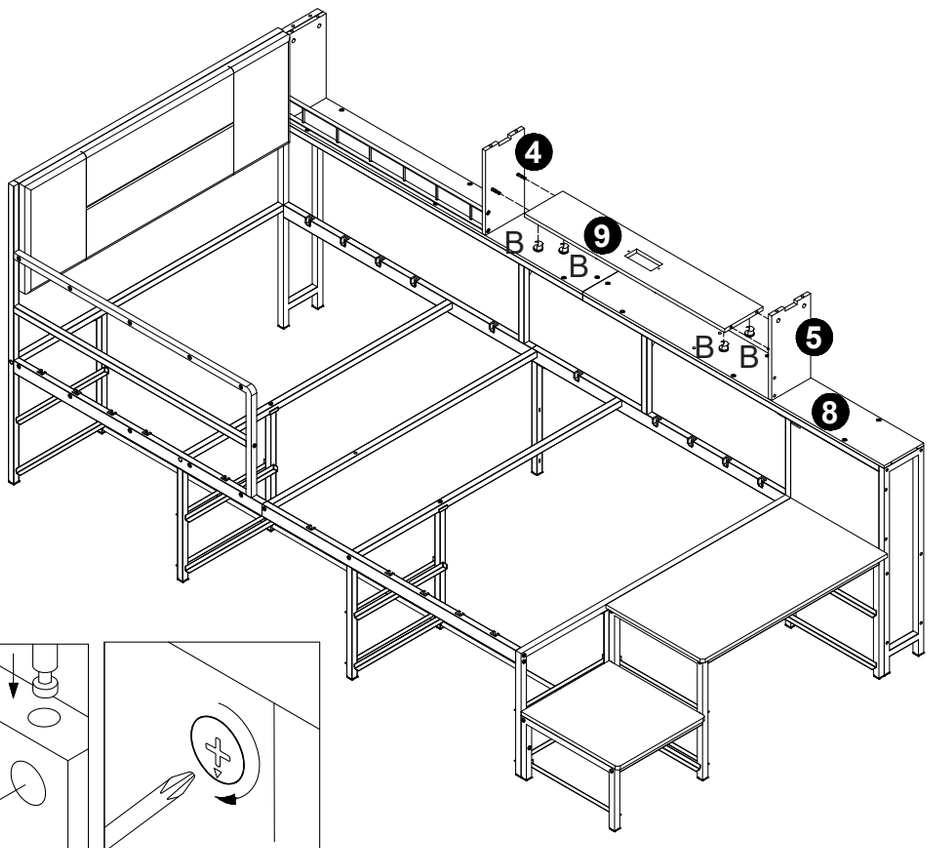

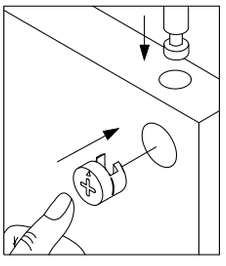



Ø12mm	
B	4PCS

36

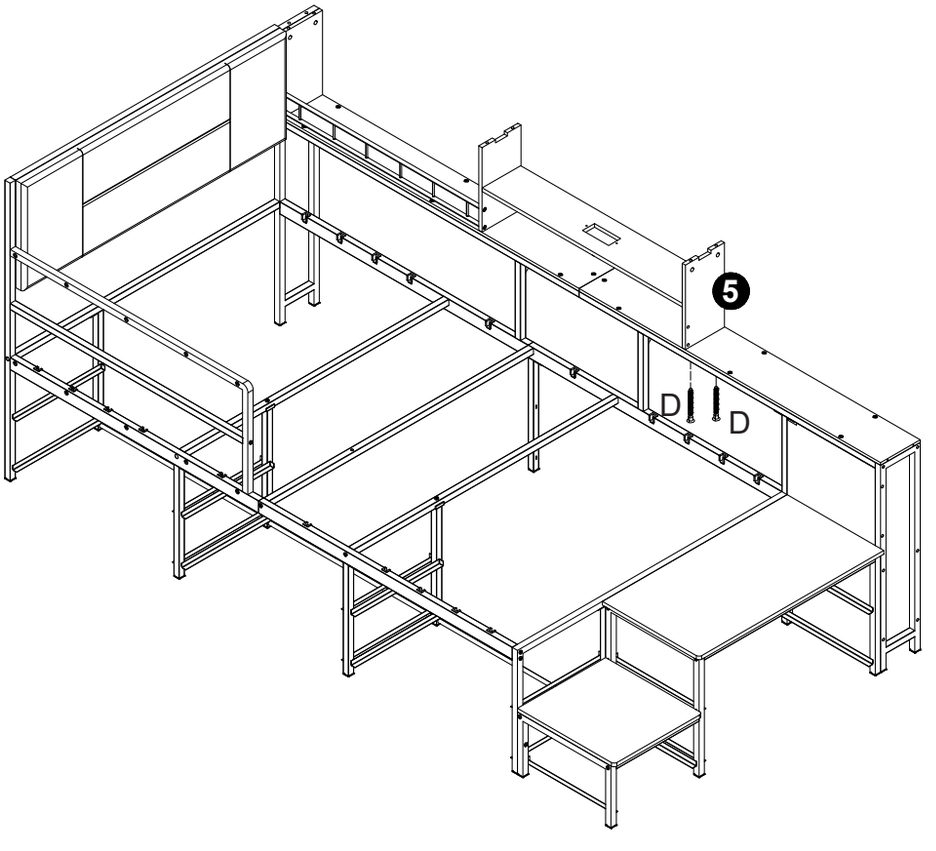



M6.3*50mm	
D	2PCS

37

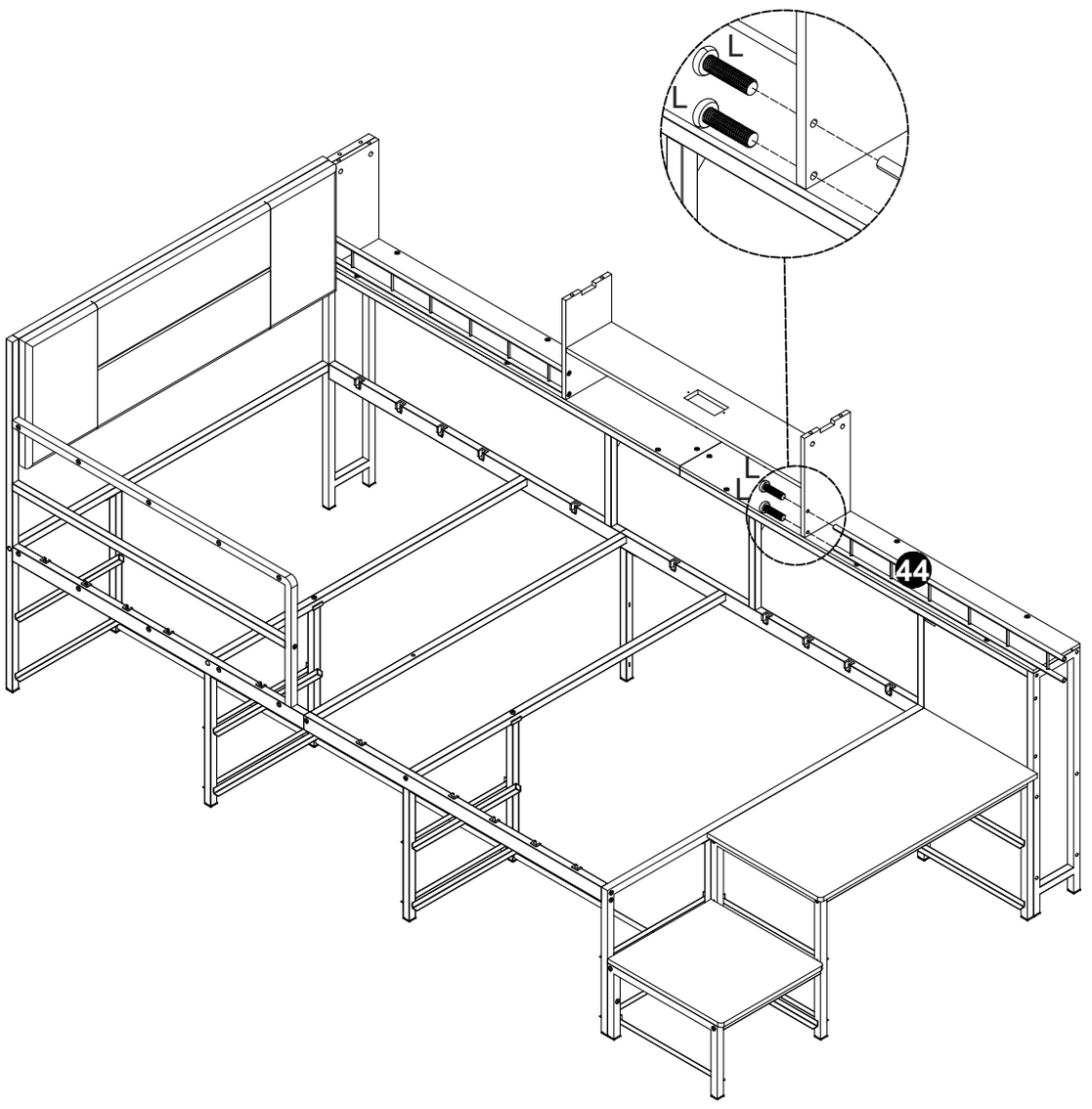



M6*23mm	
L	2PCS

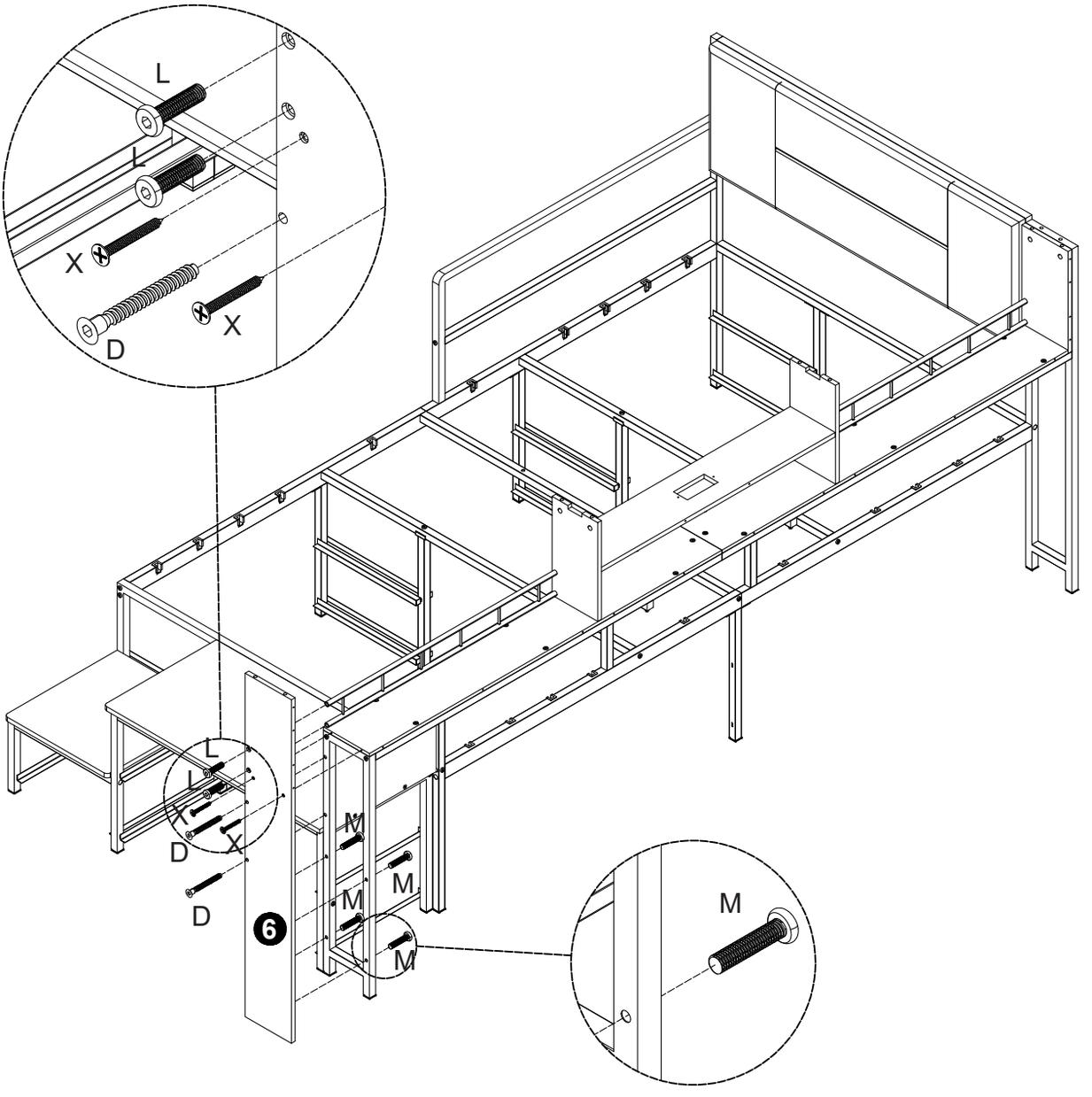

 M6.3*50mm	 M6*23mm
D 2PCS	L 2PCS
 M6*28mm	 M4*30mm
M 4PCS	X 2PCS

39

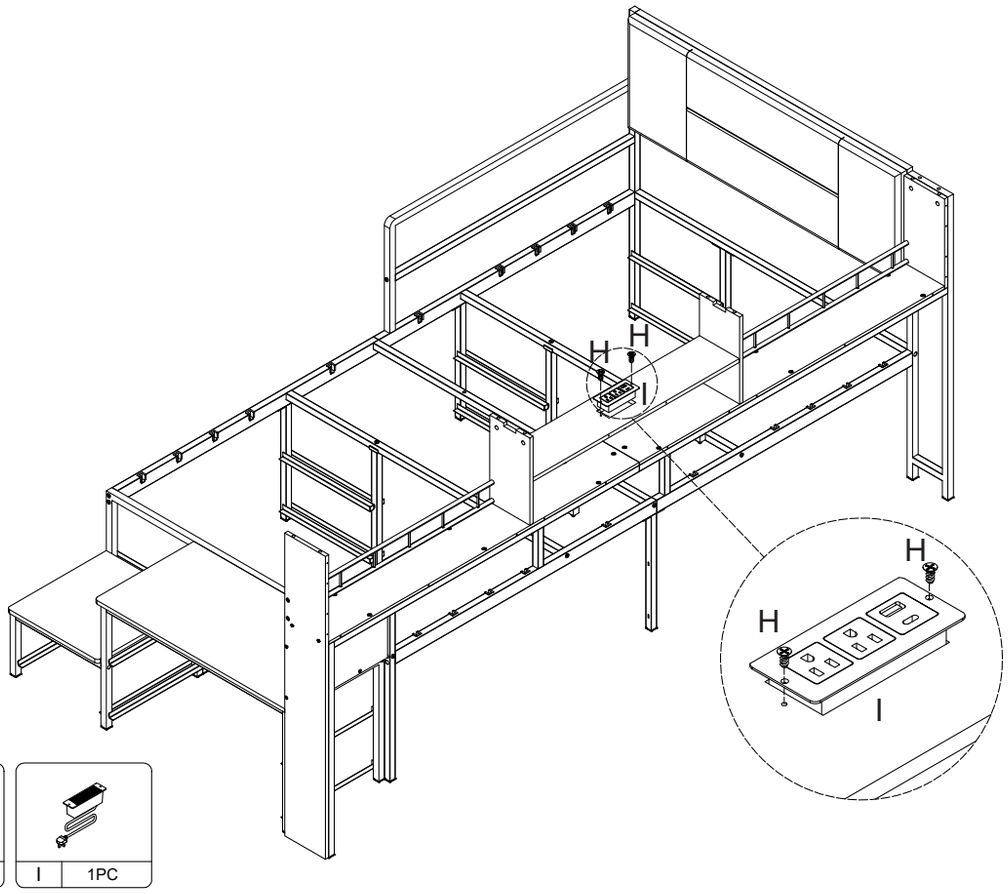

 M3.5*12mm	
H	2PCS

I	1PC

40

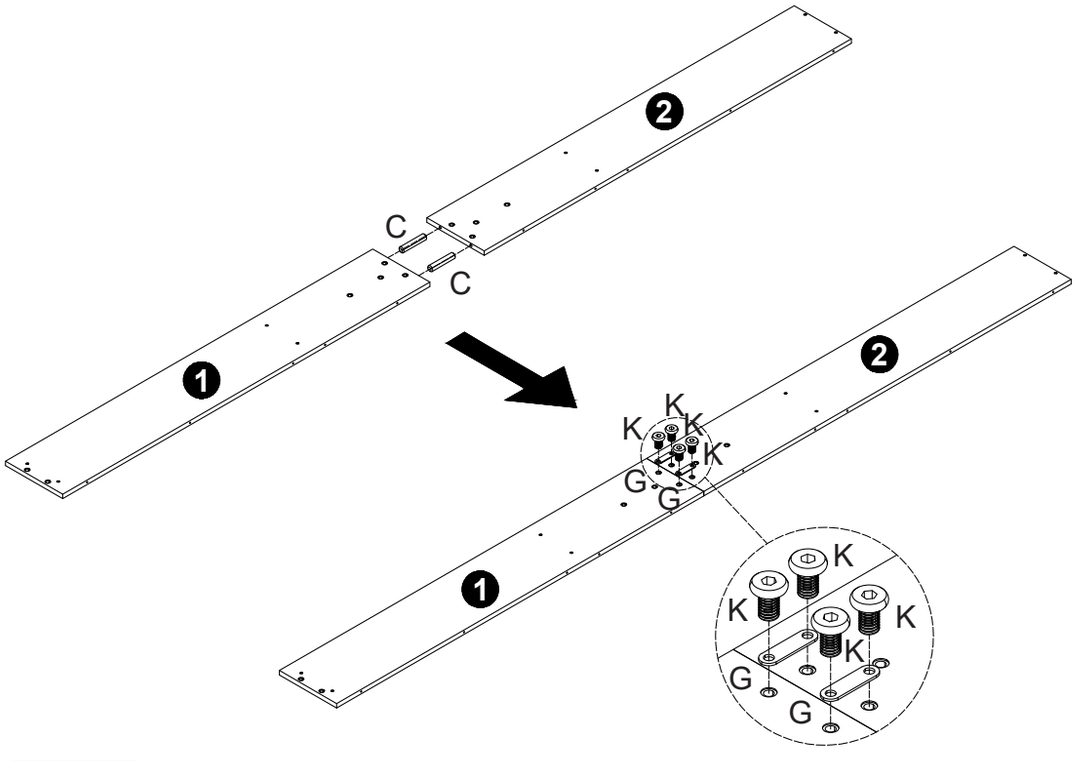

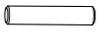 M6*30mm	
C	2PCS

 M6*12mm	
K	4PCS

	
G	2PCS

41

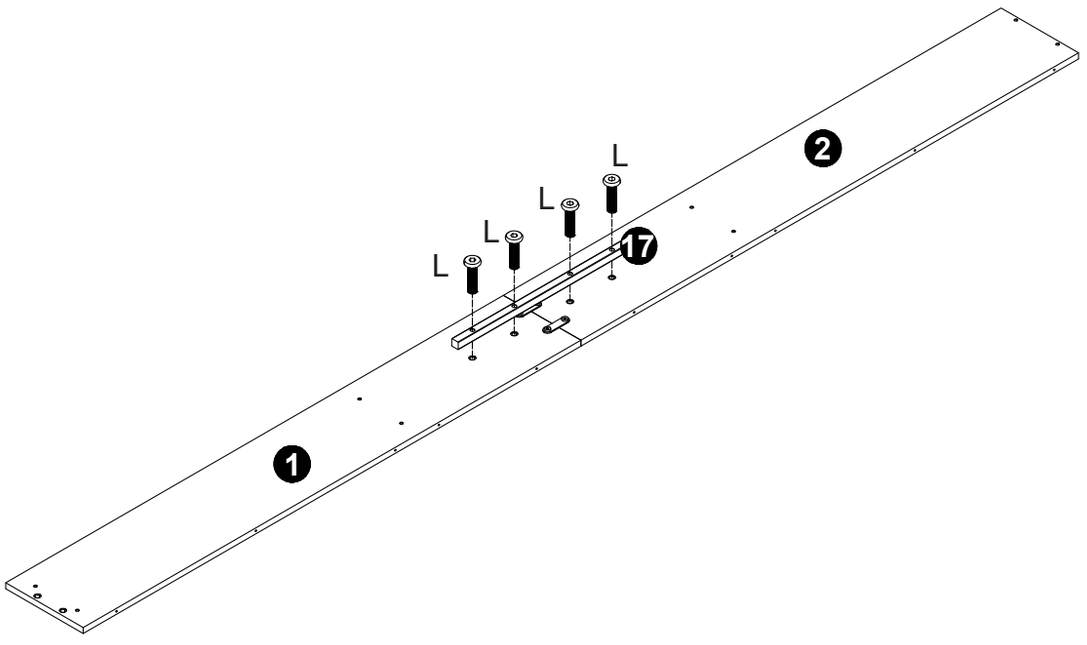



M6*23mm	
L	4PCS

42

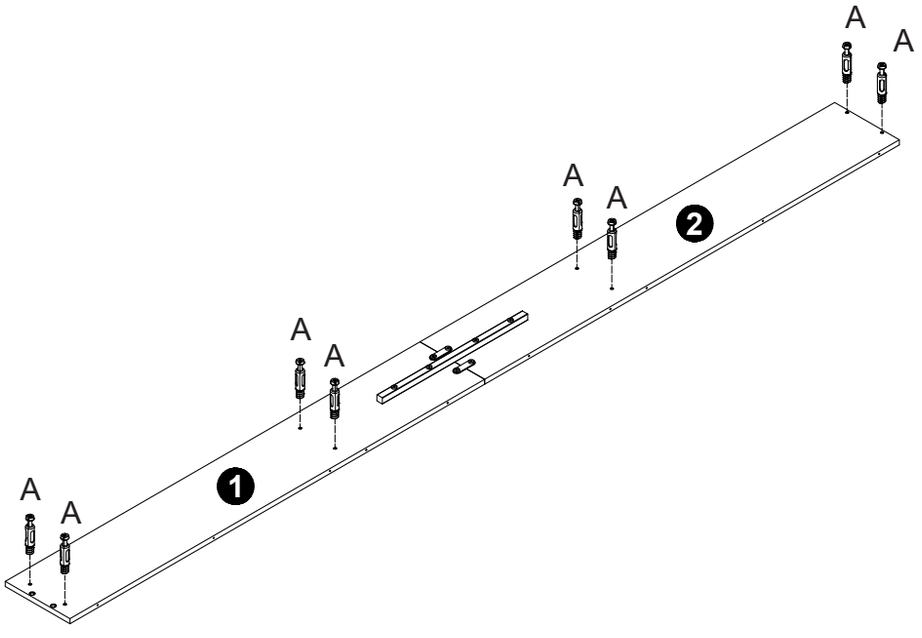



A	8PCS

43

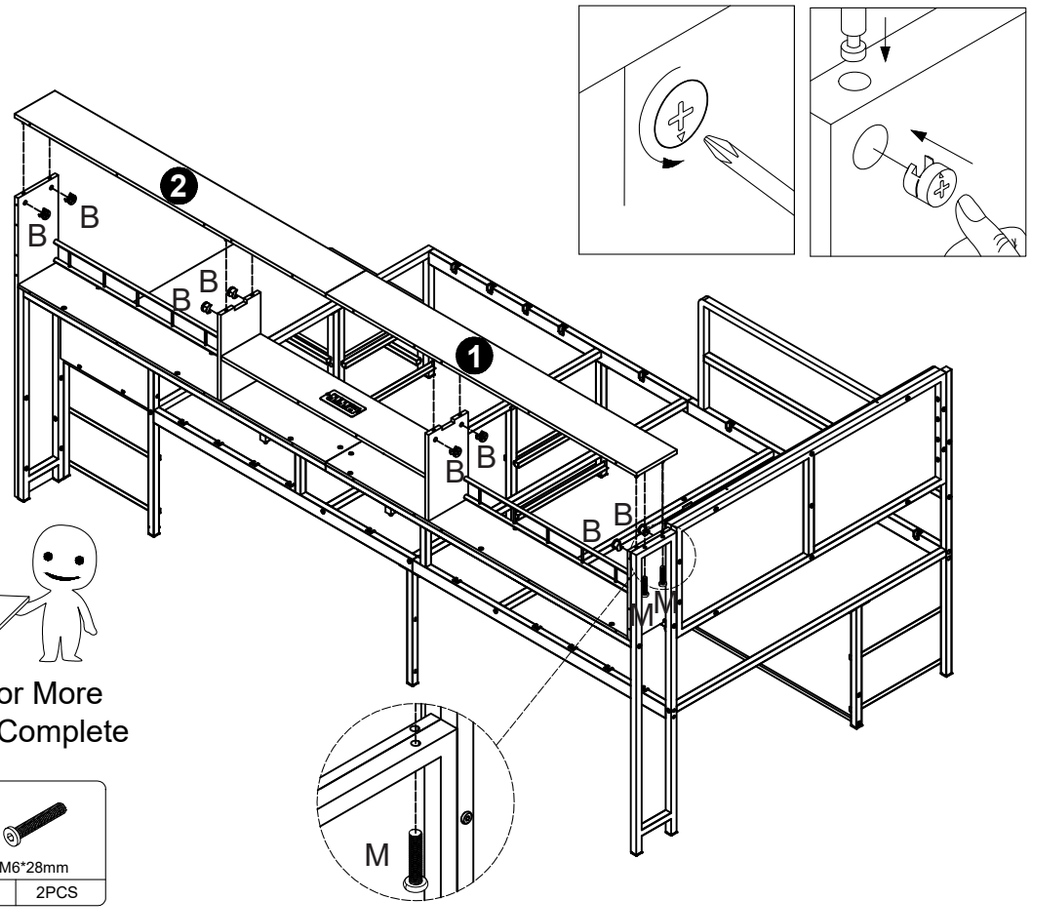

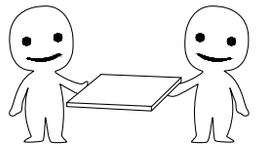

Need Two or More
People To Complete

Ø12mm	
B	8PCS

M6*28mm	
M	2PCS

44

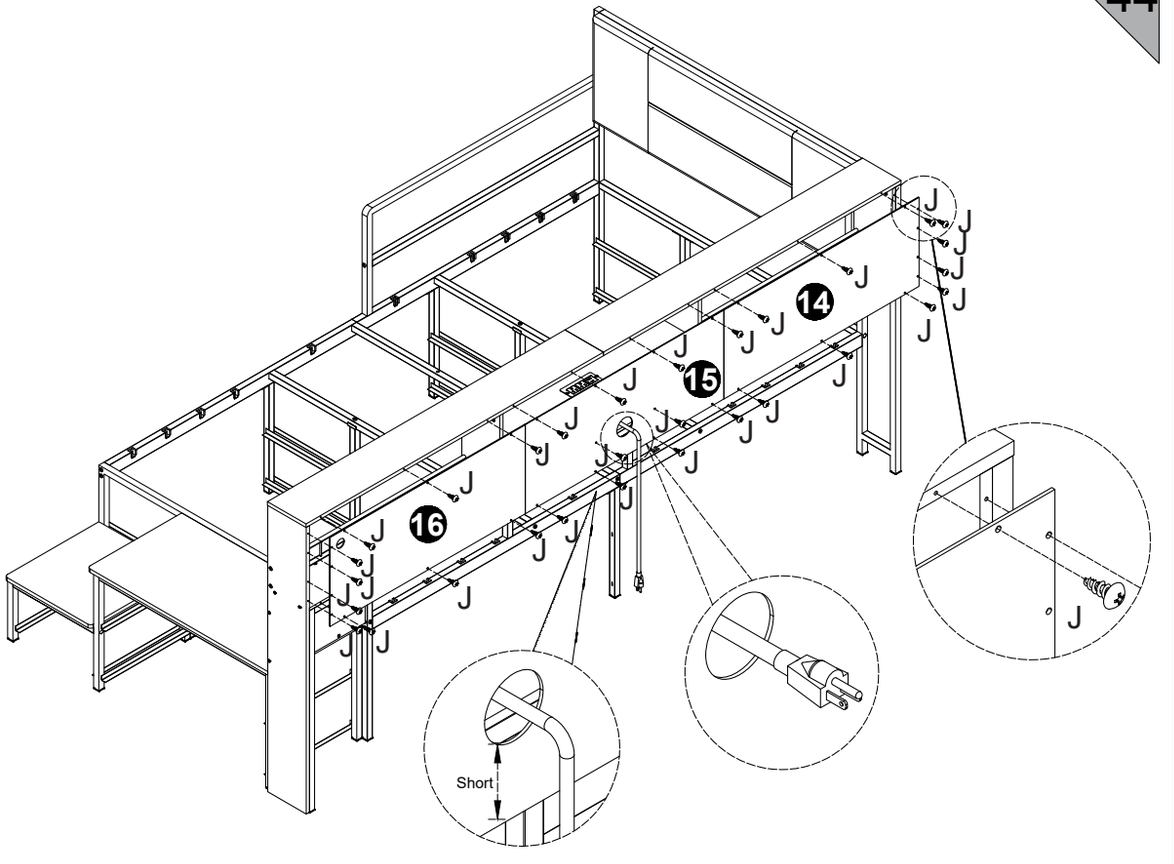

M4*12mm	
J	30PCS

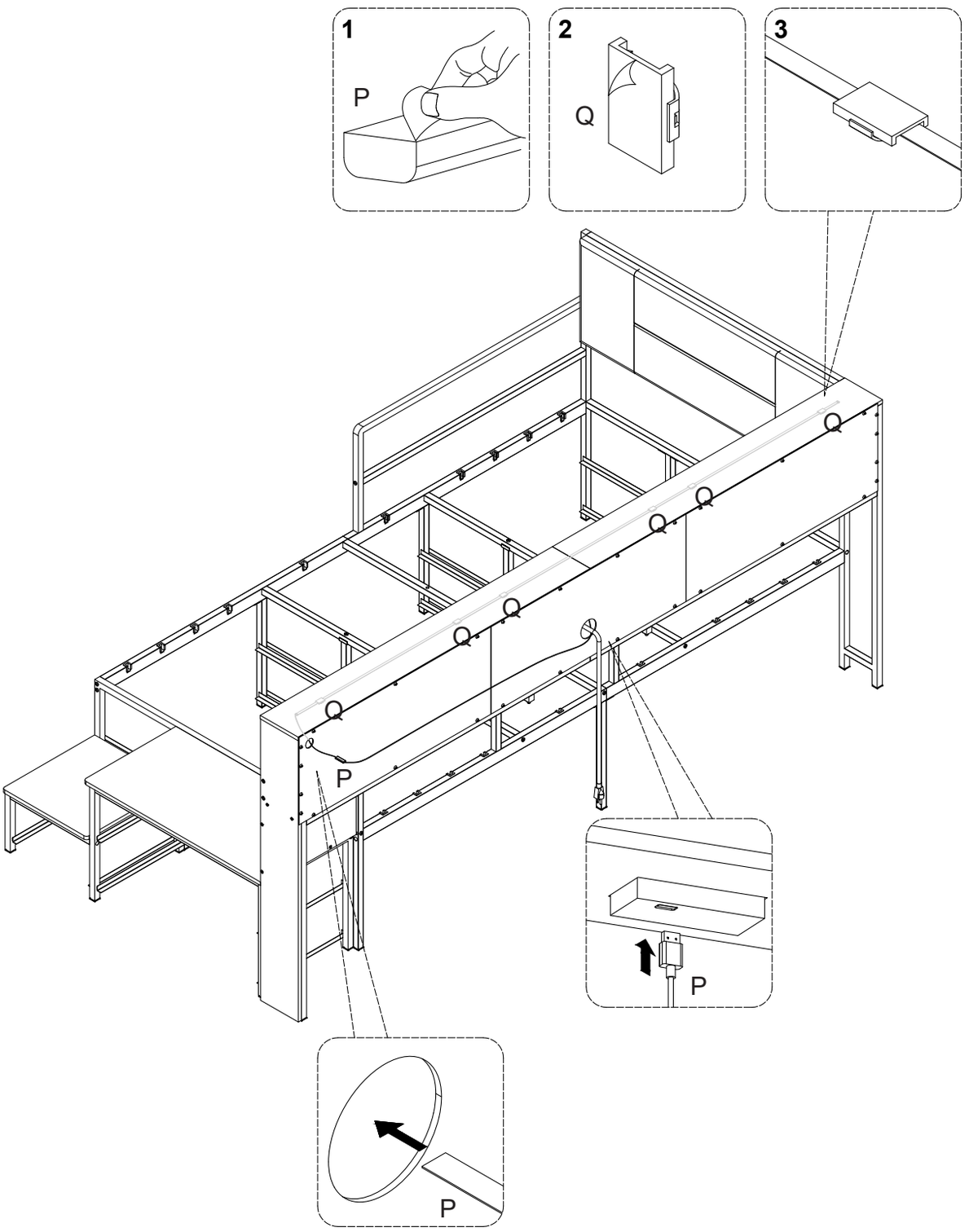

P	1PC
Q	6PCS

46

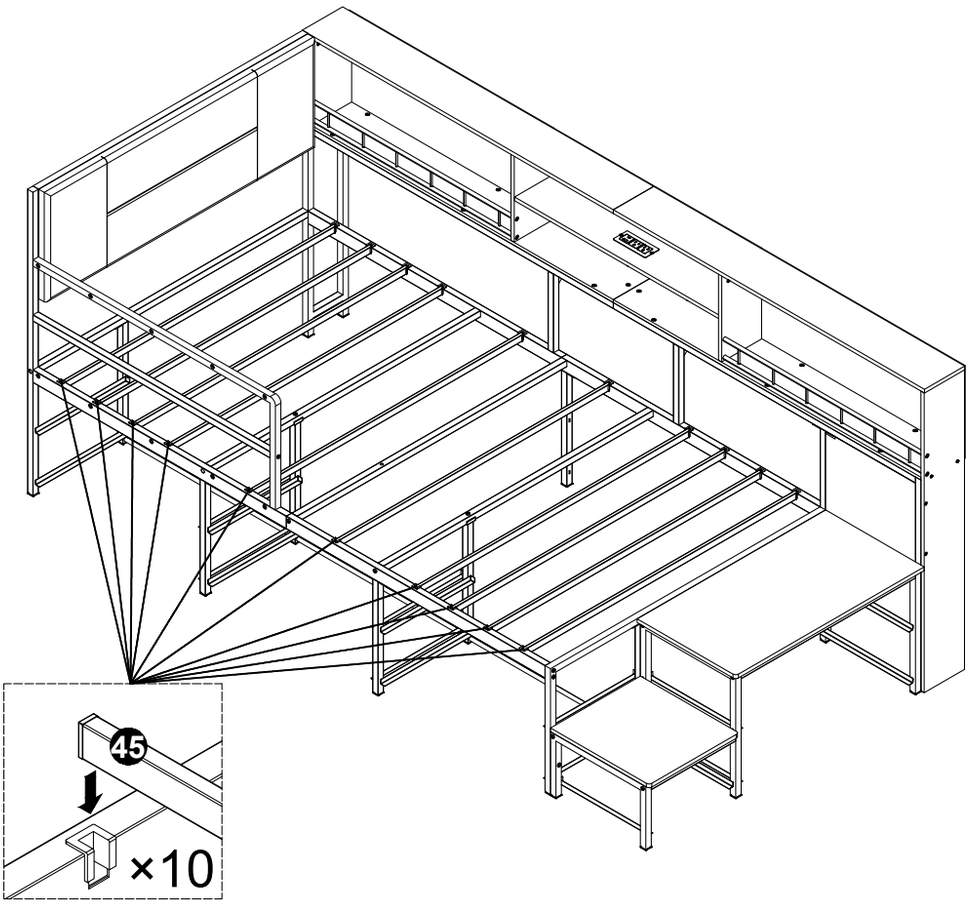

47

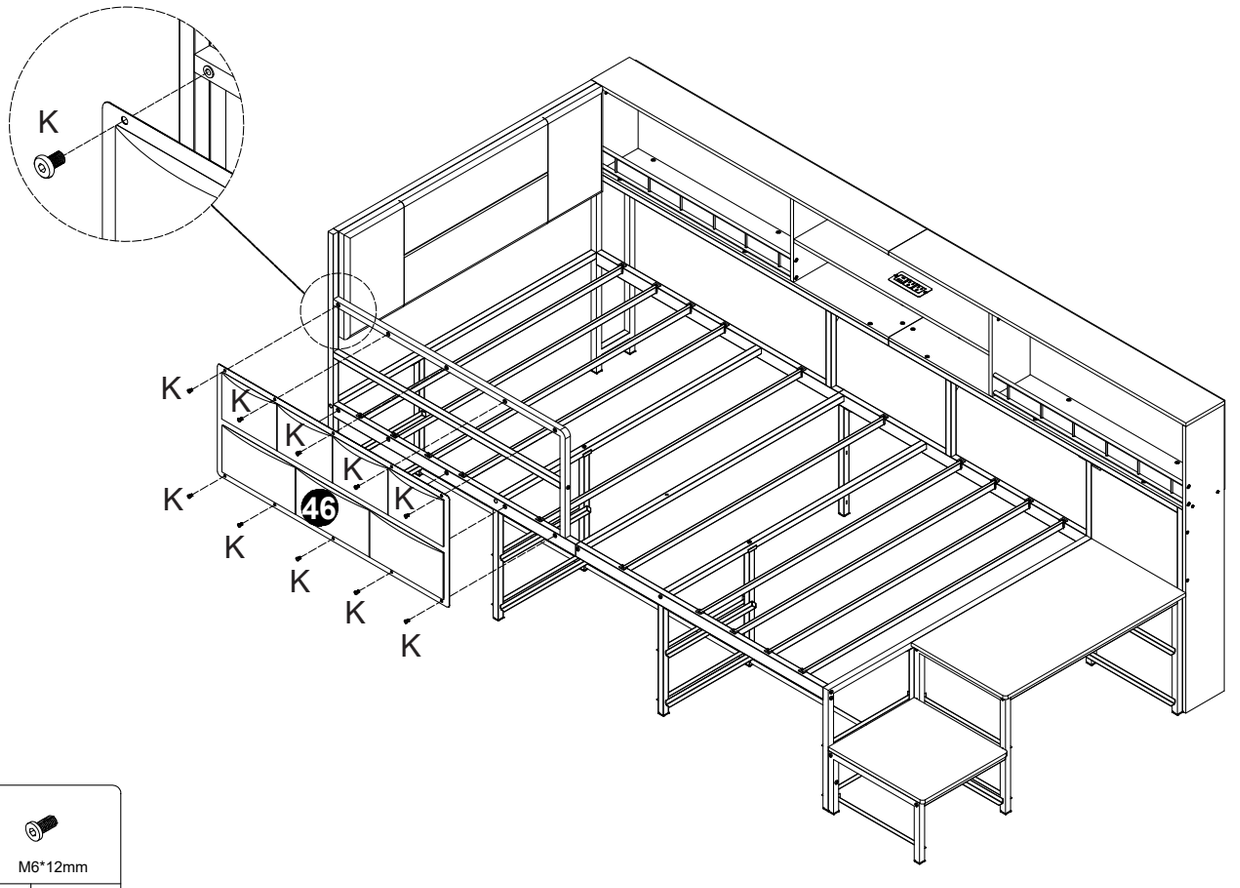

48

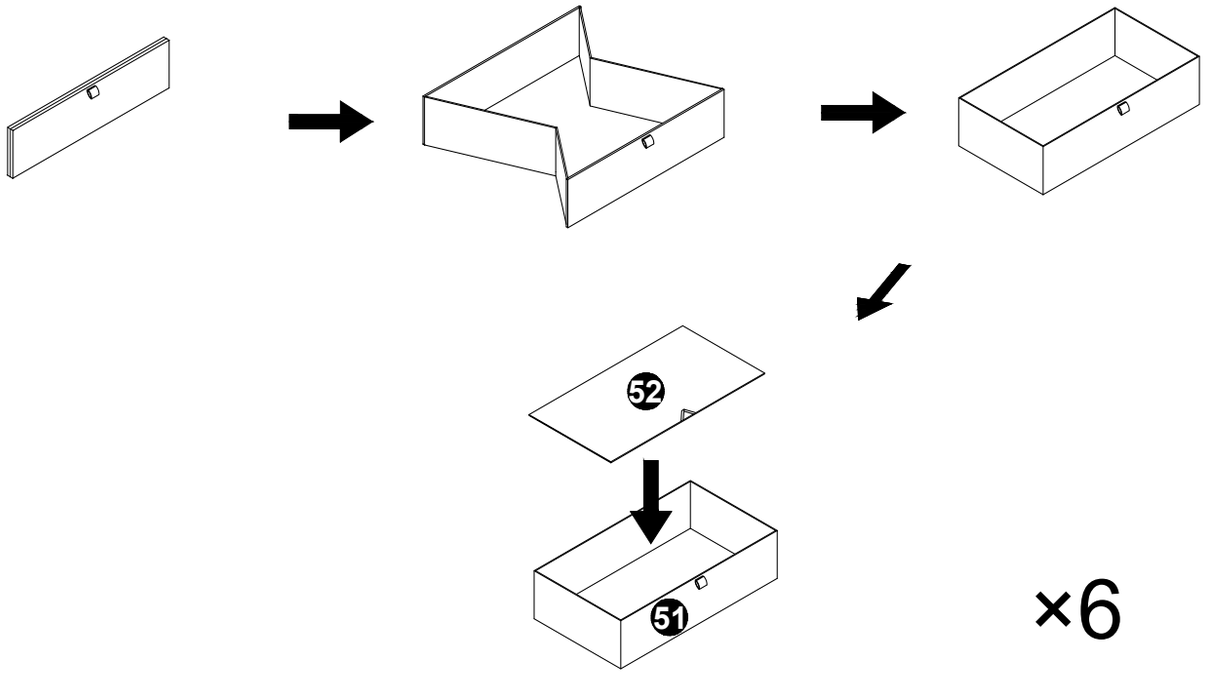

49

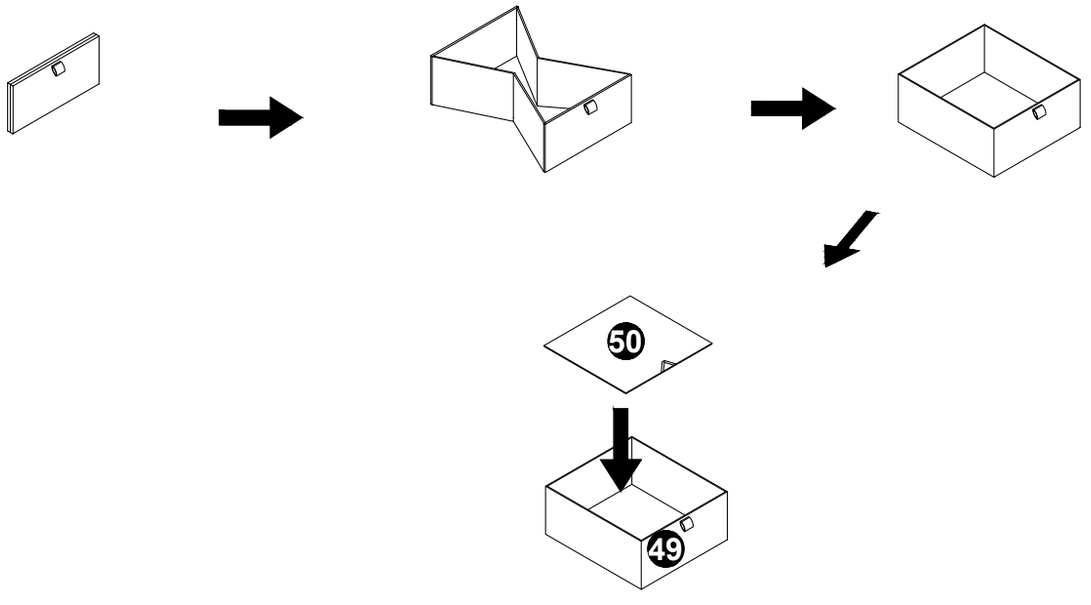

50

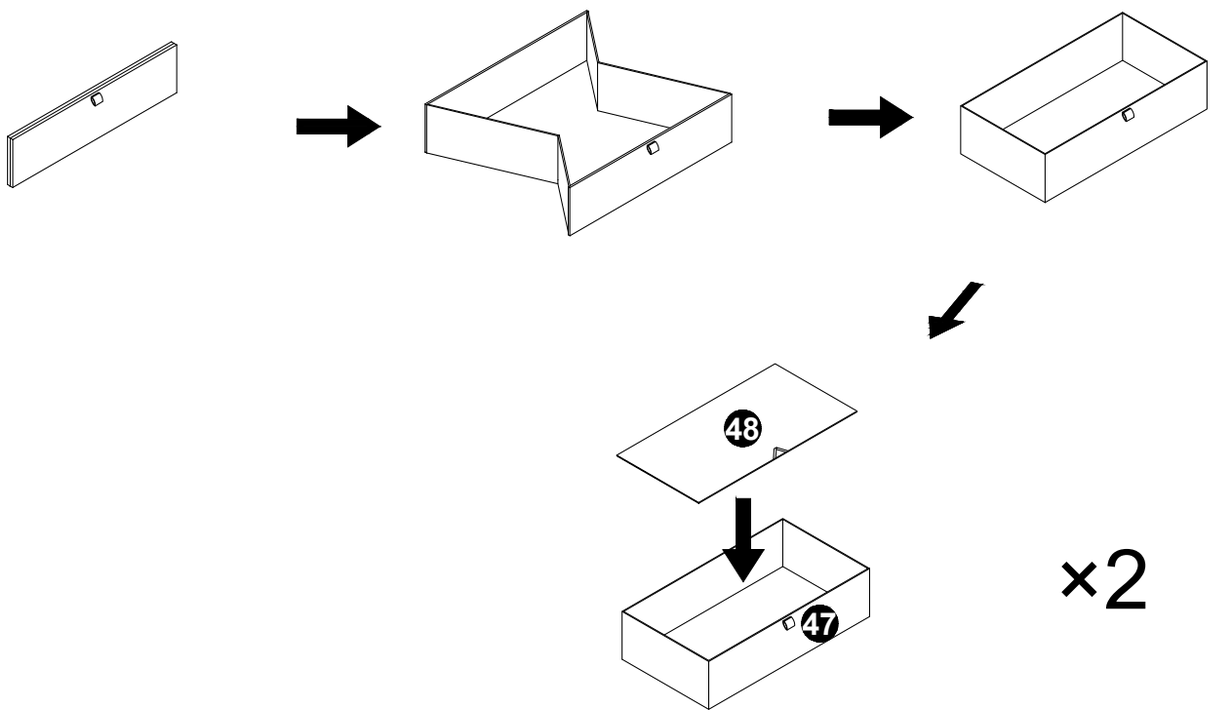

51

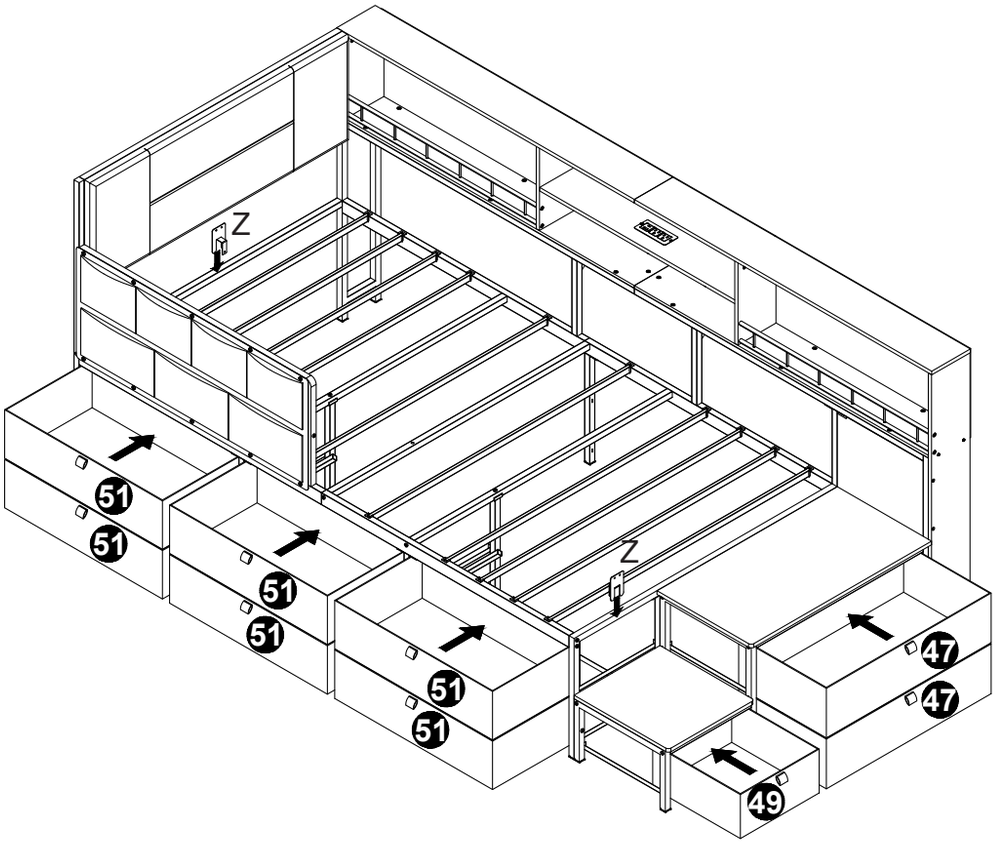

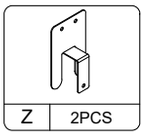

Using Cover-up Sticker (V)*38
to cover the exposed part of Screws.

