ASSEMBLY INSTRUCTION

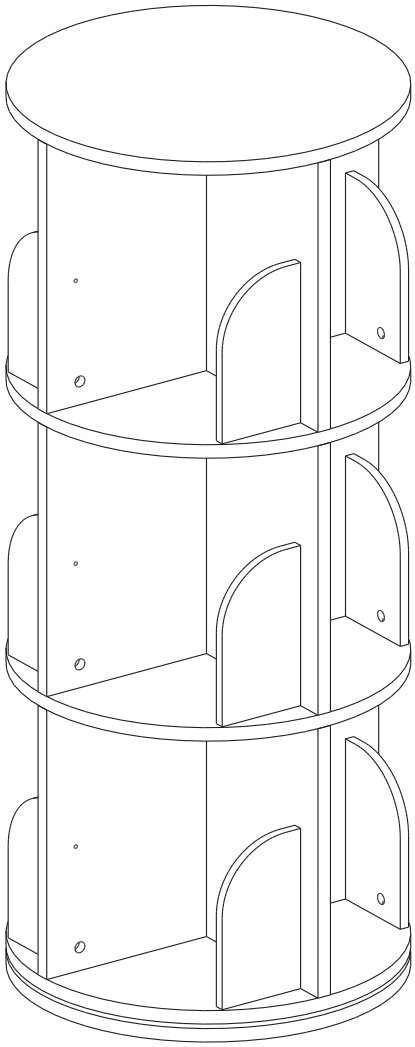

⚠ SAFETY NOTICE

Use on a level, stable surface. Keep children from climbing, sitting, or standing on the bookcase. Place heavier items on lower shelves. Rotate slowly and carefully.

① x1

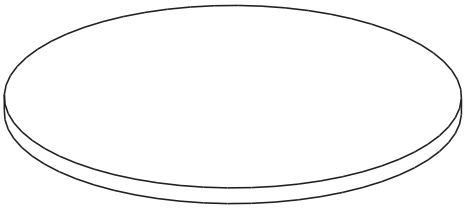

② x2

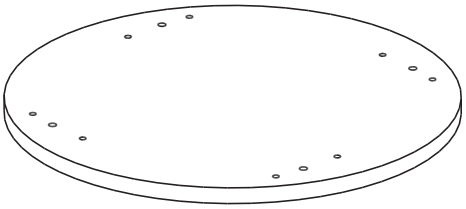

③ x1

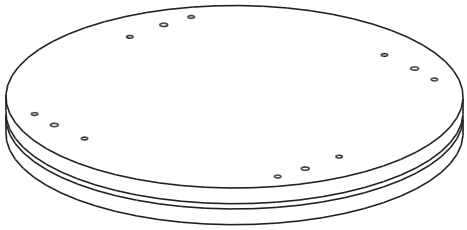

④ x3

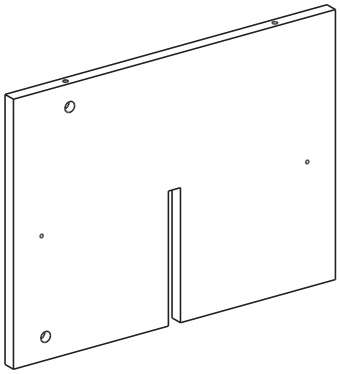

⑤ x3

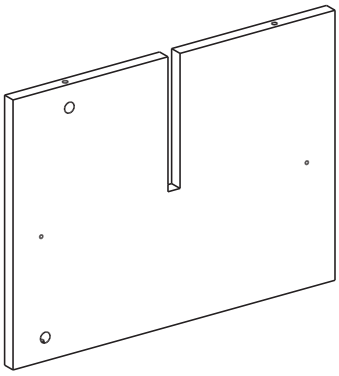

⑥x12

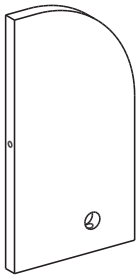

Ax36



Bx36



Cx12

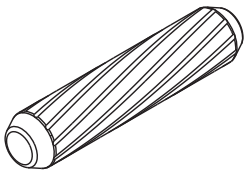

Dx12

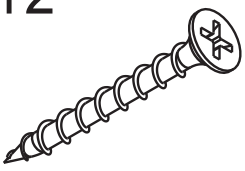

Ex48

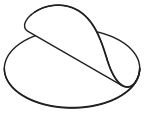

1

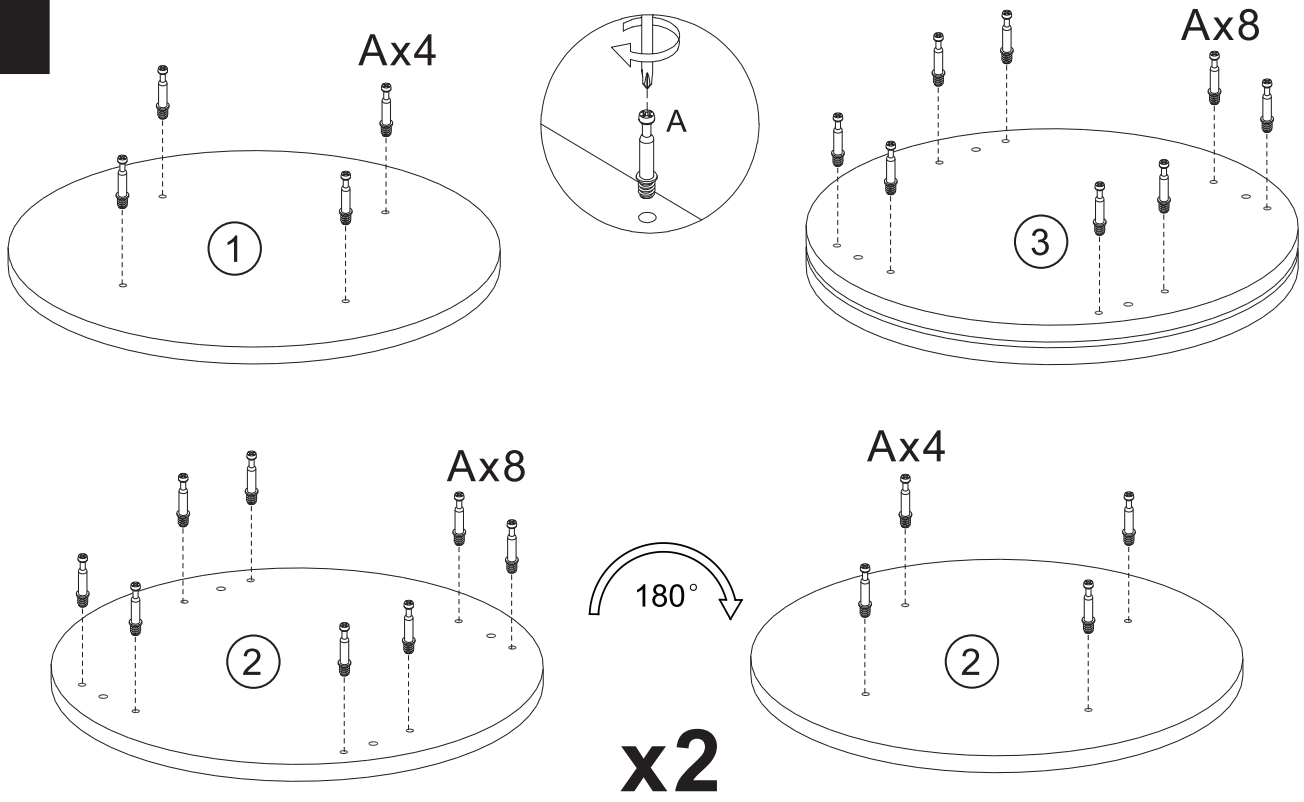

2

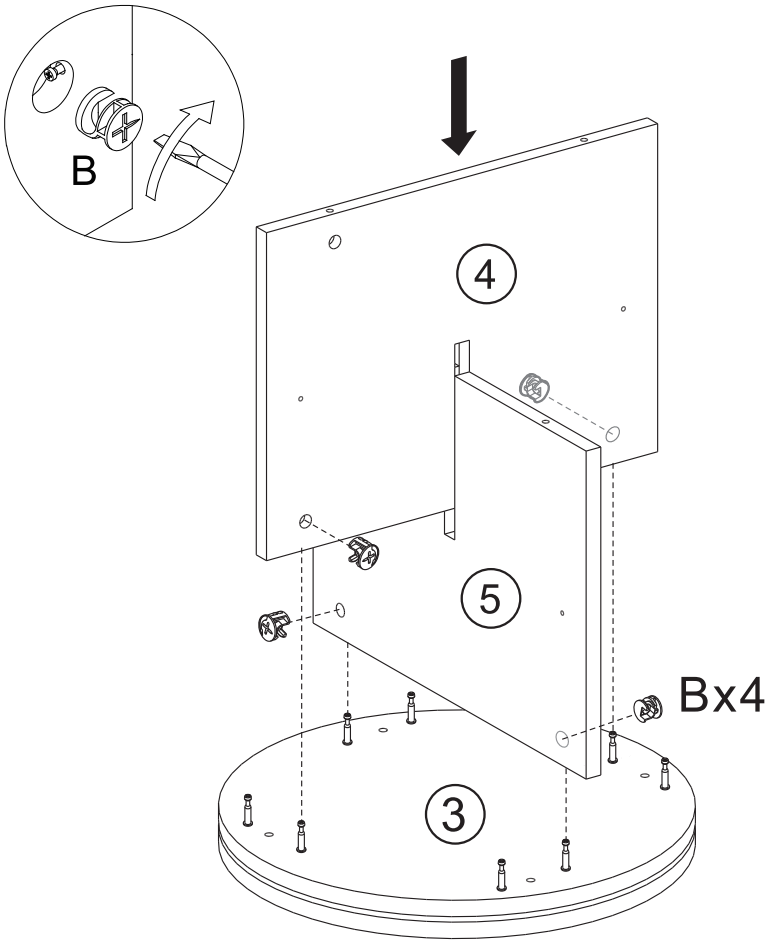

3

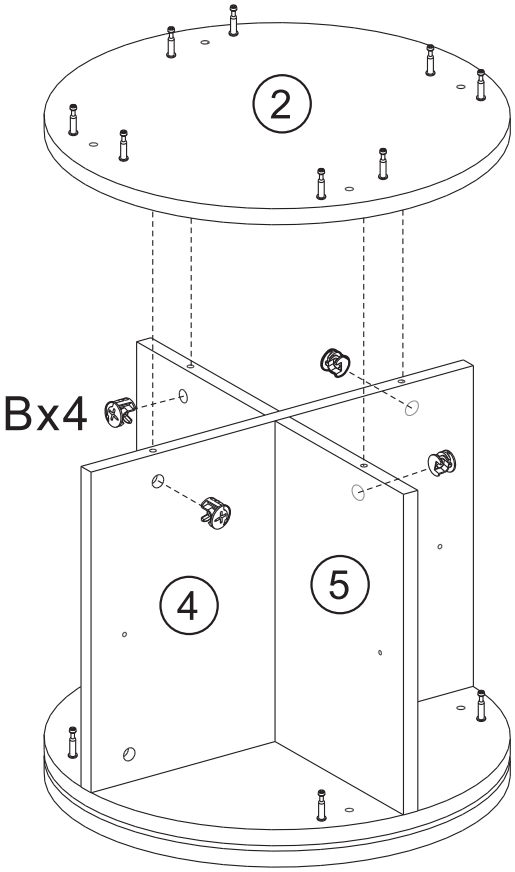

4

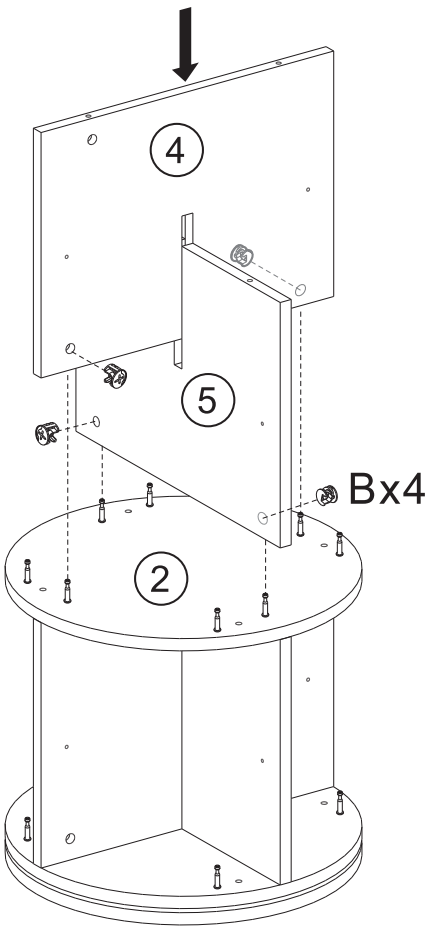

5

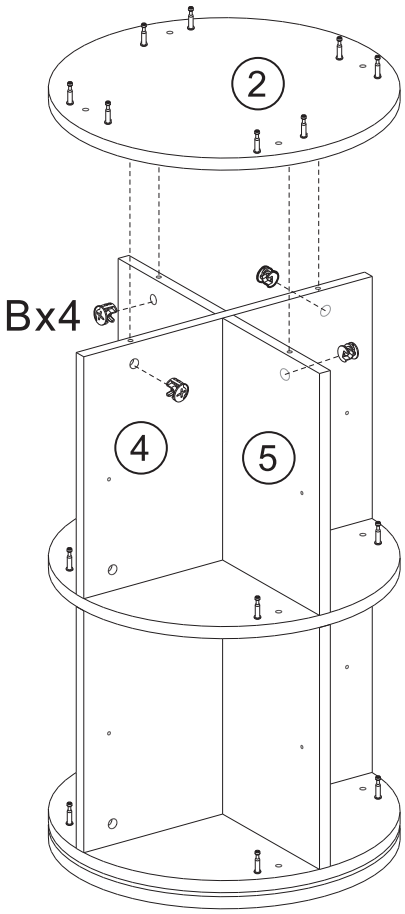

6

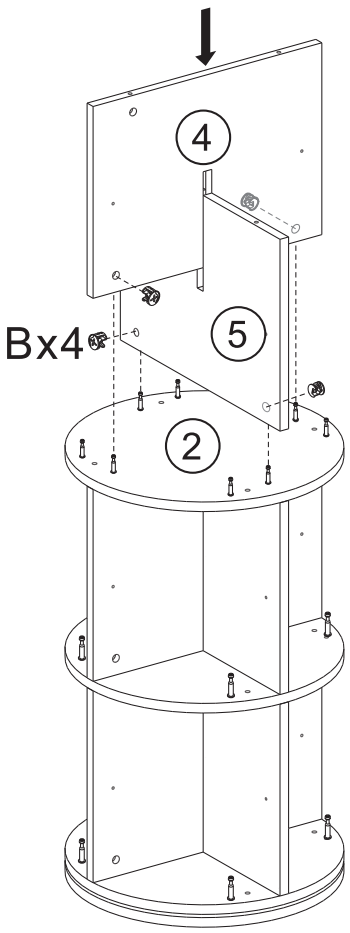

7

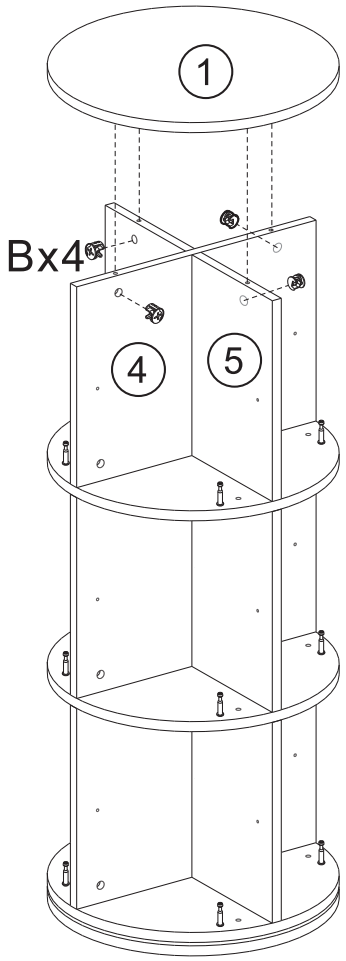

8

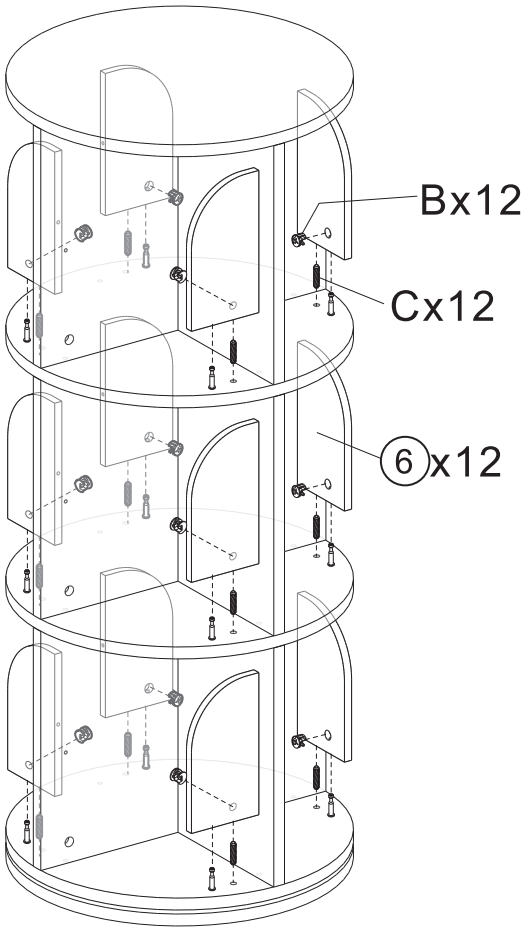

9

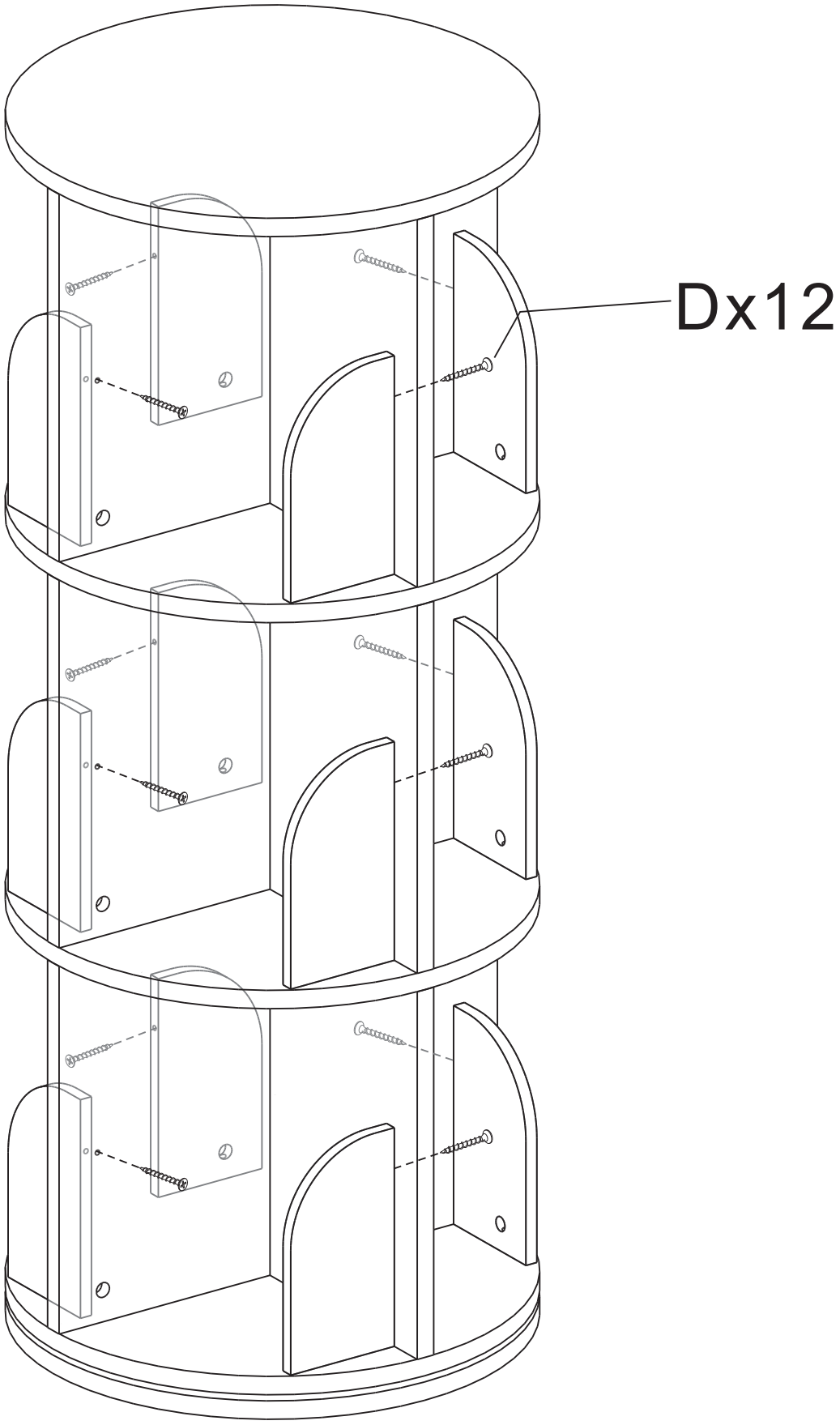

10

