Chicken and Rabbit Pen

Completion: Pen as a Stand Alone Pen.

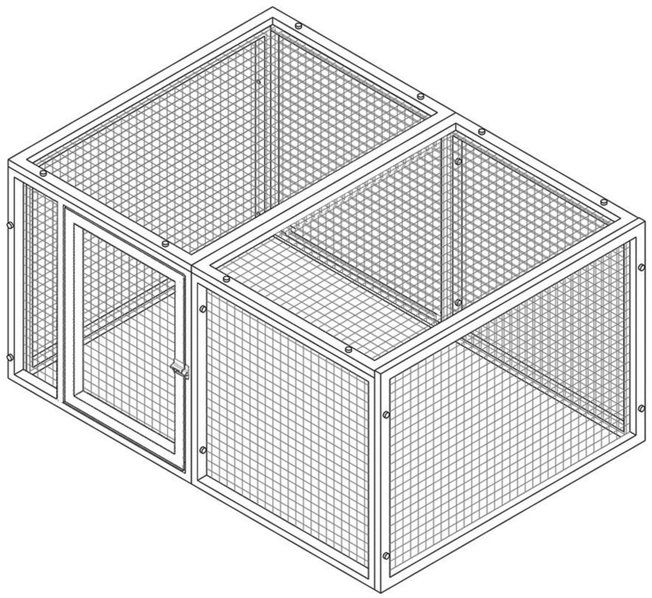

Completion: Pen attached to Fontana Barn.

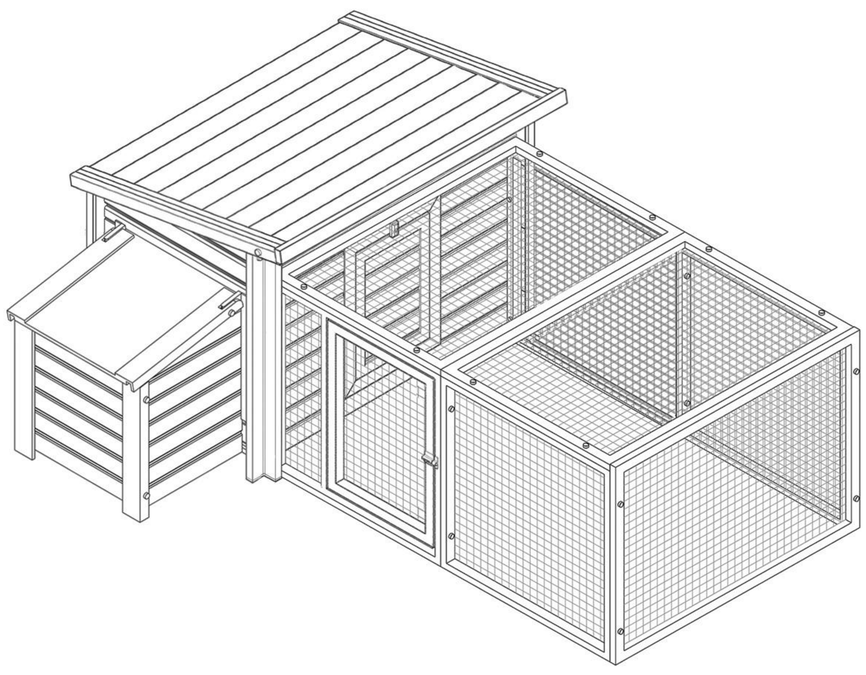

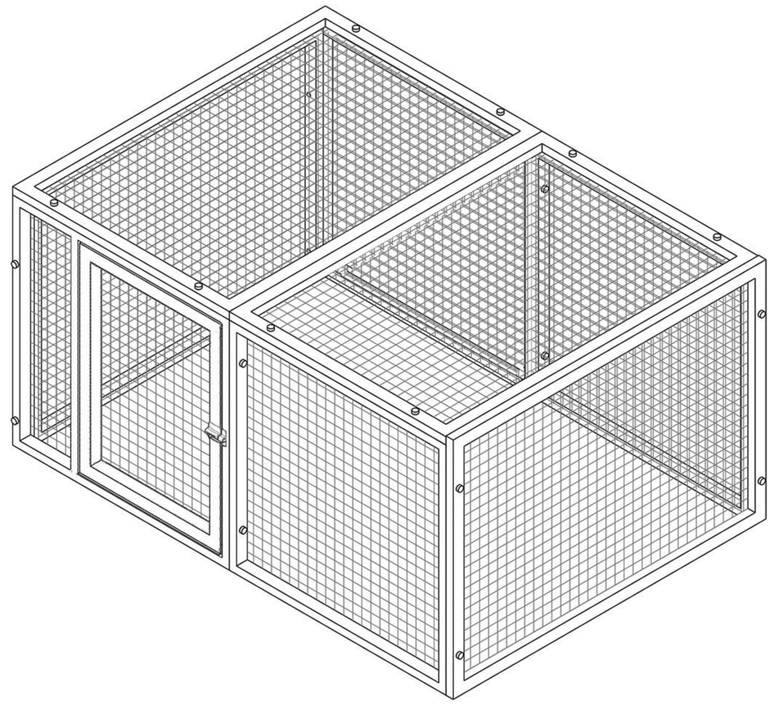

Congratulations on your purchase!

Part List:

Side Panels (P1, P2 & P4)

Side Panel With Door (P5)

2 3/8” Thumb Screws (A) x 13

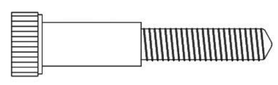

1 9/16” Thumb Screws (C) x 3

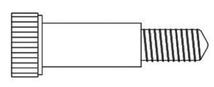

End Panels (P3 & P8)

Top Panels (P6 & P7)

1 3/4” Thumb Screws (B) x 4

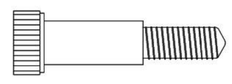

Nuts (D) x 13

Step 1. In sequence, assemble Panels P1, P2, P3 & P4 using Thumb Screws (A) & Nuts (D). Attach Panel P5 – with the gate – to P4 using Thumb Screws (C). *Note: make sure that the remaining pre-drilled holes in these Panels are facing up as shown in the illustration.*

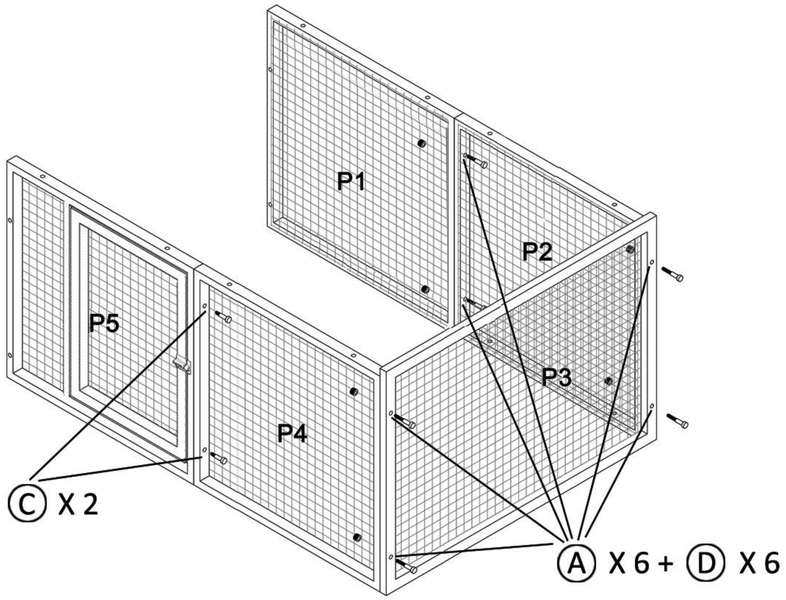

Step 2A. (To attach the Pen to Chicken Barn, skip this step and go to Step 2B). For using the Pen as a free standing unit, attach Panel P8 to the structure using Thumb Screws (B).

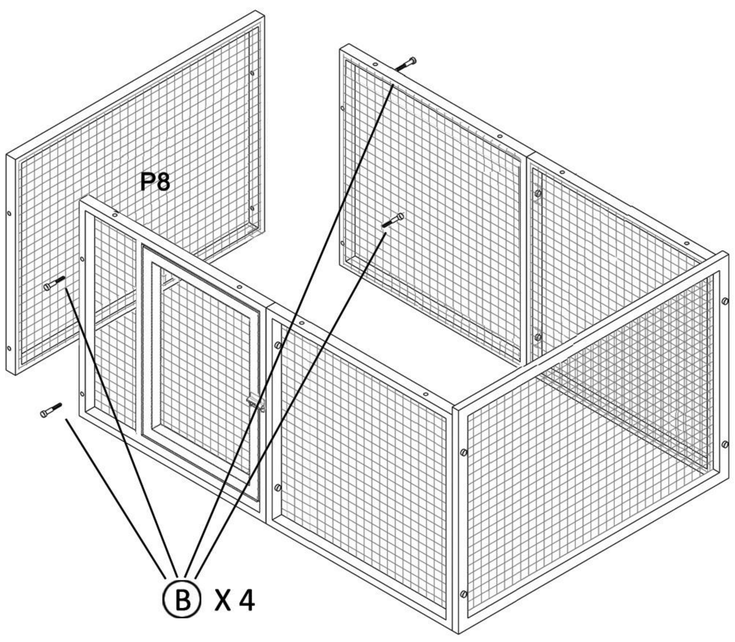

Step 2B. To attach the Pen to the Chicken Barn, slide the assembled structure into position between the upright columns on the barn. The Pen fits inside the uprights. Secure the Pen to the Bar using Thumb Screws (B), which screw into the nuts that are pre-installed into the barn panels.

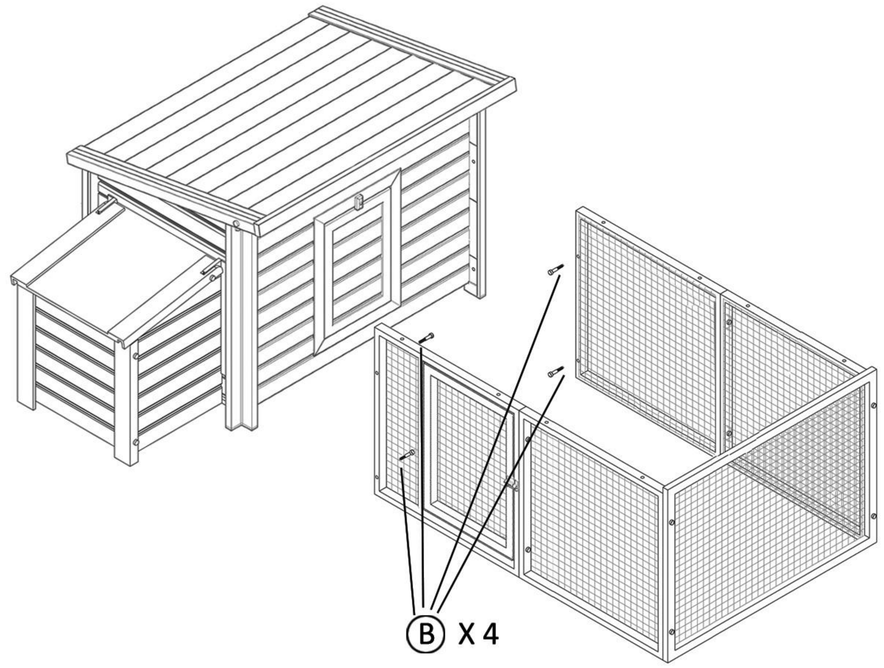
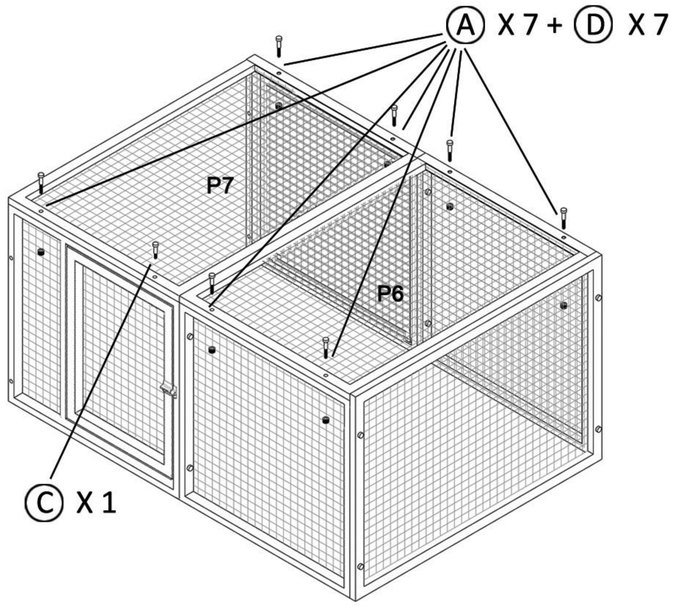
Step 3. Place Top Panels P6 & P7 on the assembled structure and secure with Thumb Screw (A) and Nut (D). Use Thumb Screw (C) for the hole right above the gate in Panel P5.