Installation Instruction

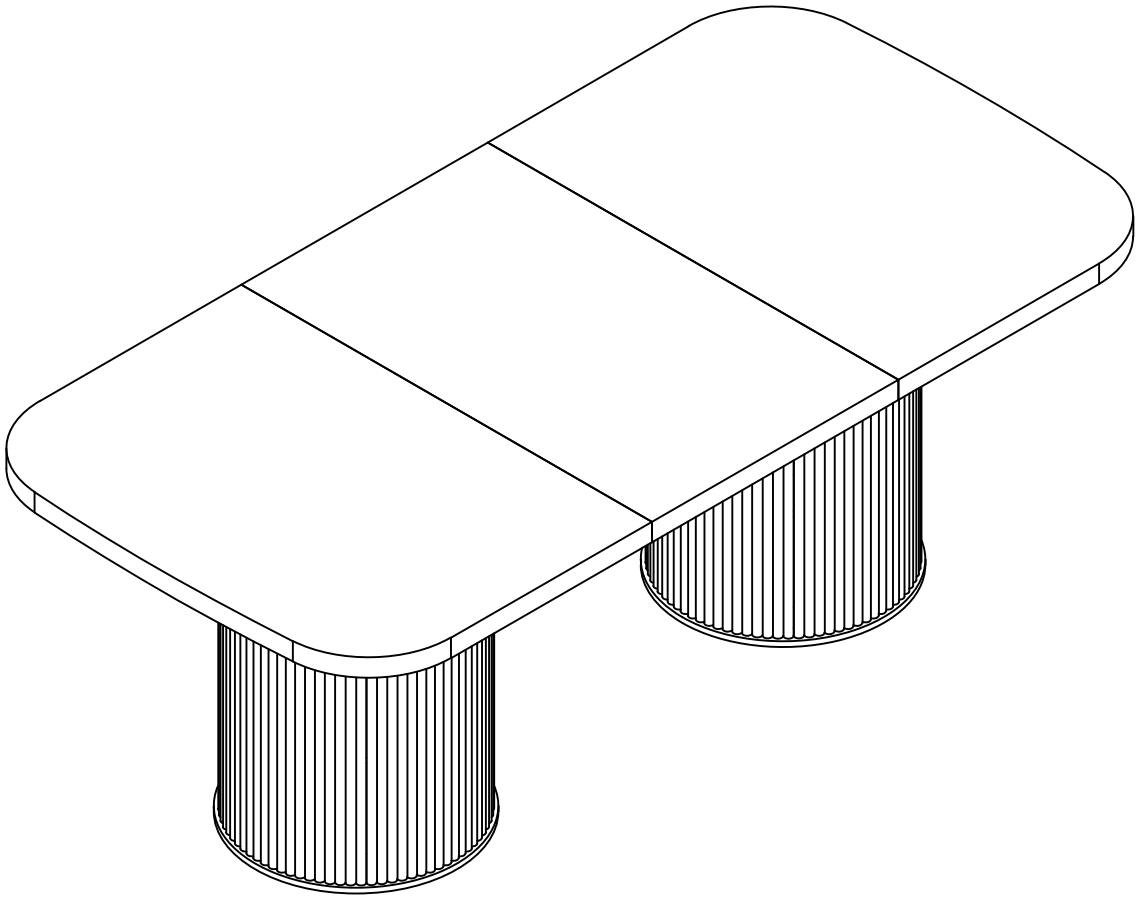

The Accessoriess

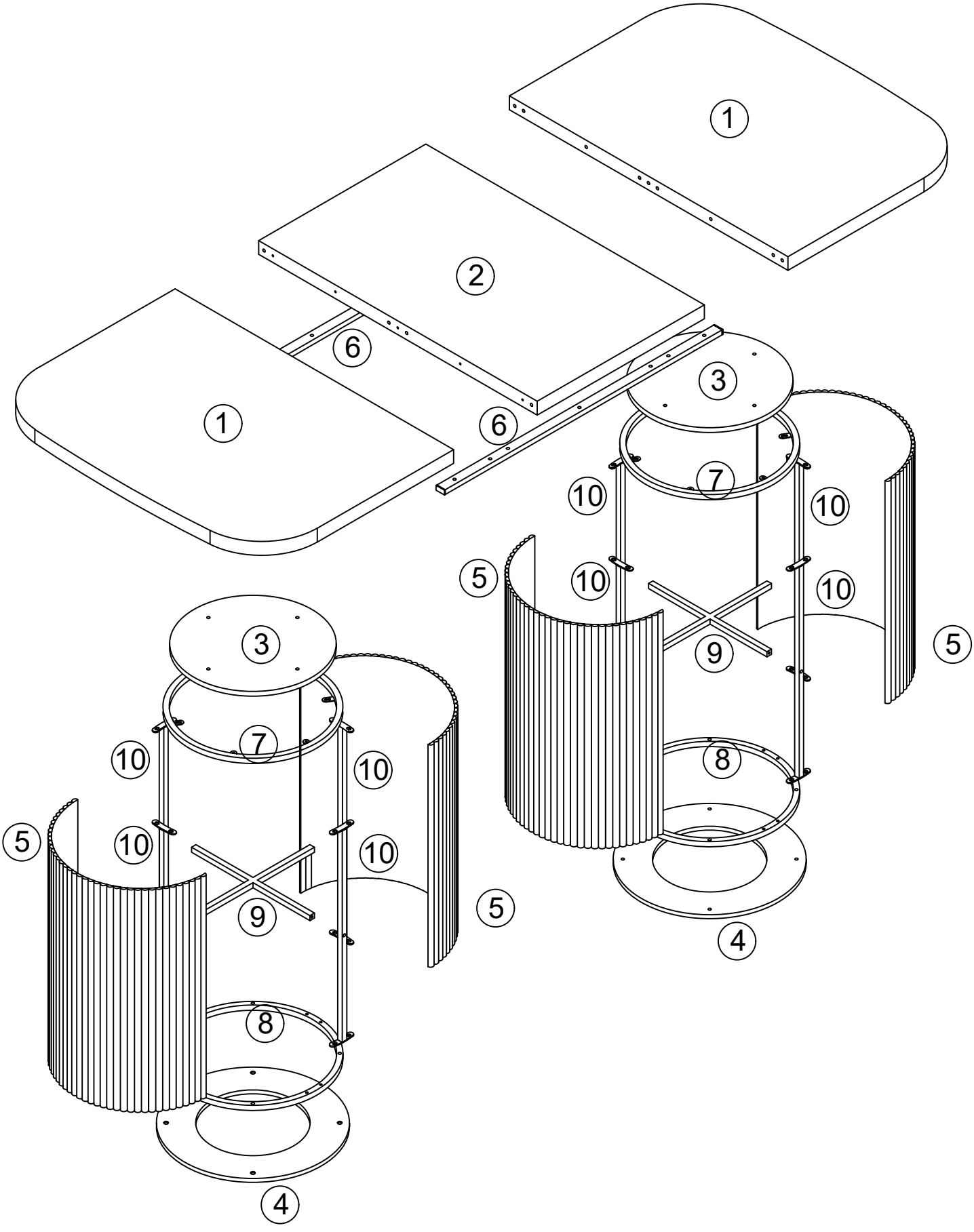

Included Accessories

① x 2

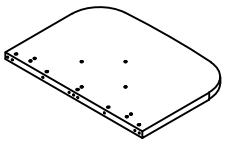

② x 1

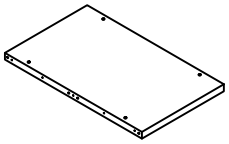

③ x 2

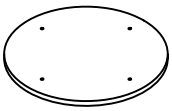

④ x 2

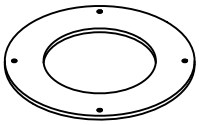

⑤ x 4

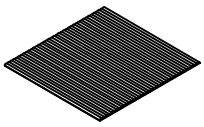

⑥ x 2

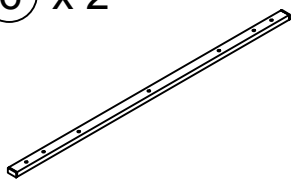

⑦ x 2

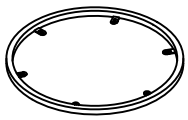

⑧ x 2

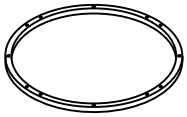

⑨ x 2

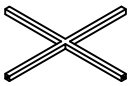

⑩ x 8

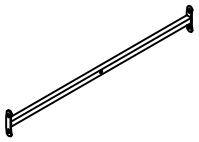

Hardwares

A x 10



ϕ 6X35mm

B x 10



ϕ 15X9.5mm

C x 8

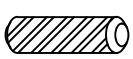

ϕ 8X30mm

D x 32



ϕ 6X10mm

E x 8



ϕ 6X22mm

F x 30



ϕ 6X30mm

G x 12



ϕ 4X14mm

H x 8



I x 1



1

When assembling the panel,
please do not touch the groundy

A	x 10
ϕ 6X35mm	

C	x 8
ϕ 8X30mm	

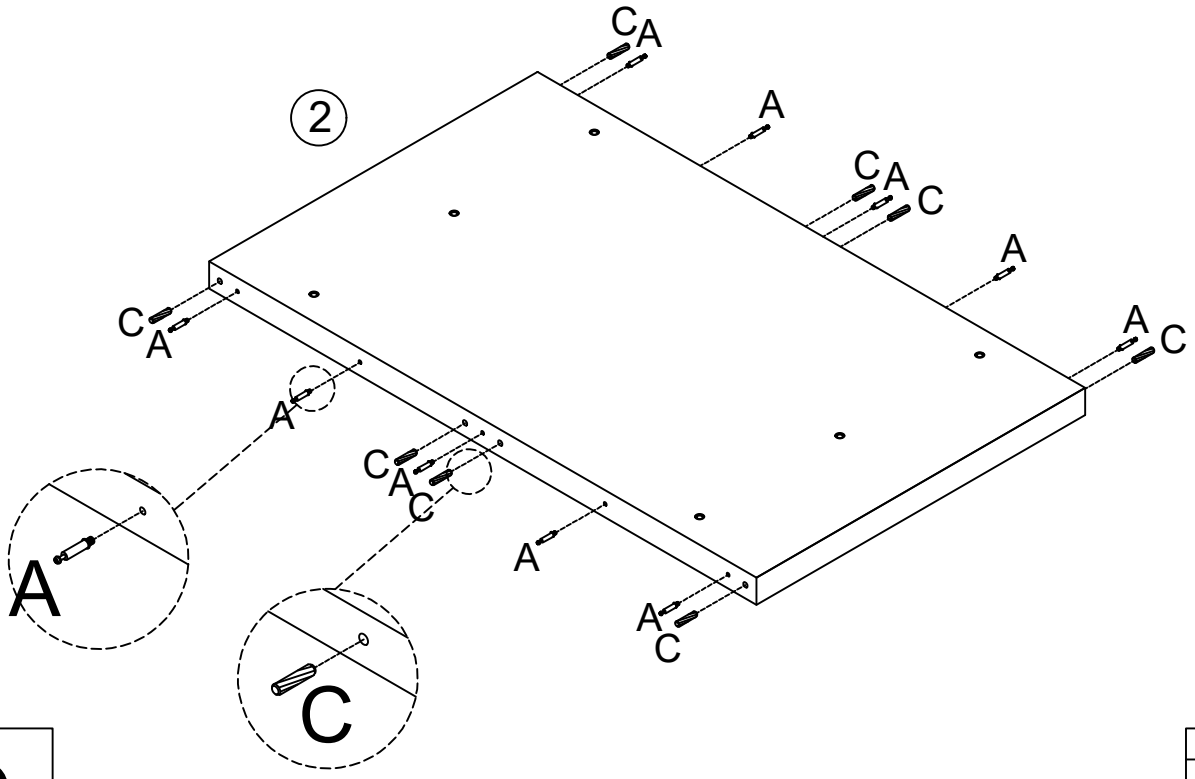

2

B	x 10
ϕ 15X9.5mm	

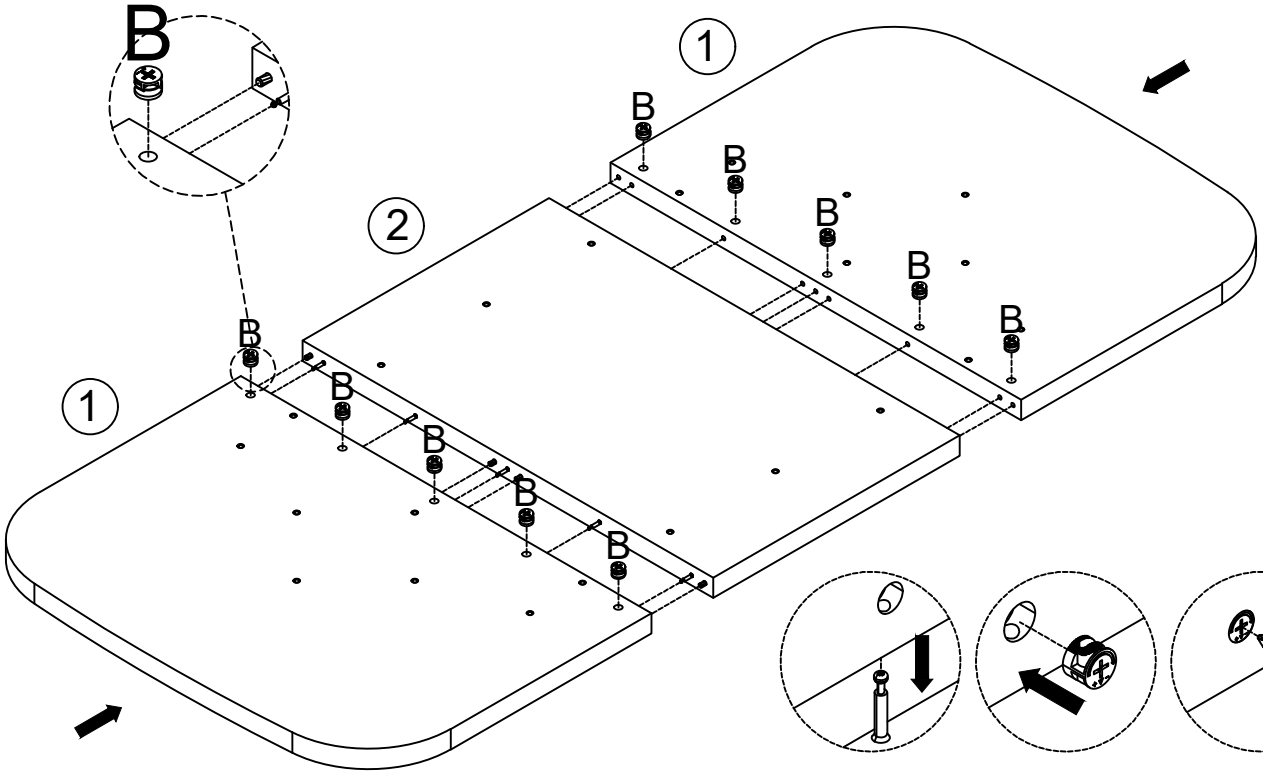

Make sure the arrow on the camlock
B is pointing toward the Part A

3

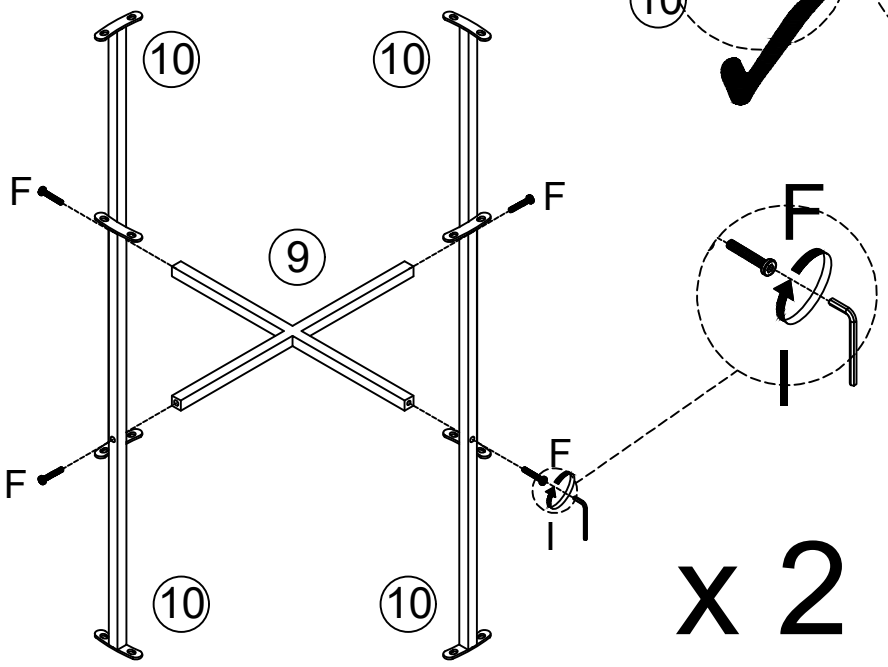

F	x 8
ϕ 6X30mm	

I	x 1

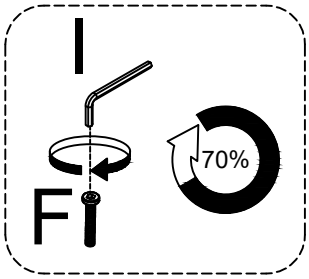

Screw in Screw F to 70% depth.
After Component 7 and Component 8 are assembled, tighten it to 100%.

4

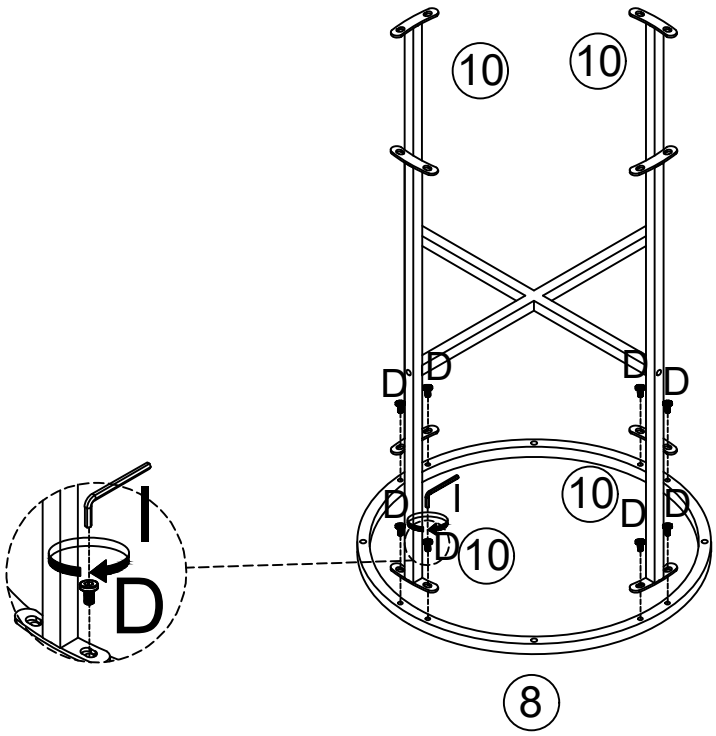

D	x 16
ϕ 6X10mm	

I	x 1

5

E	x 8
	
ϕ 6X22mm	

I	x 1
	

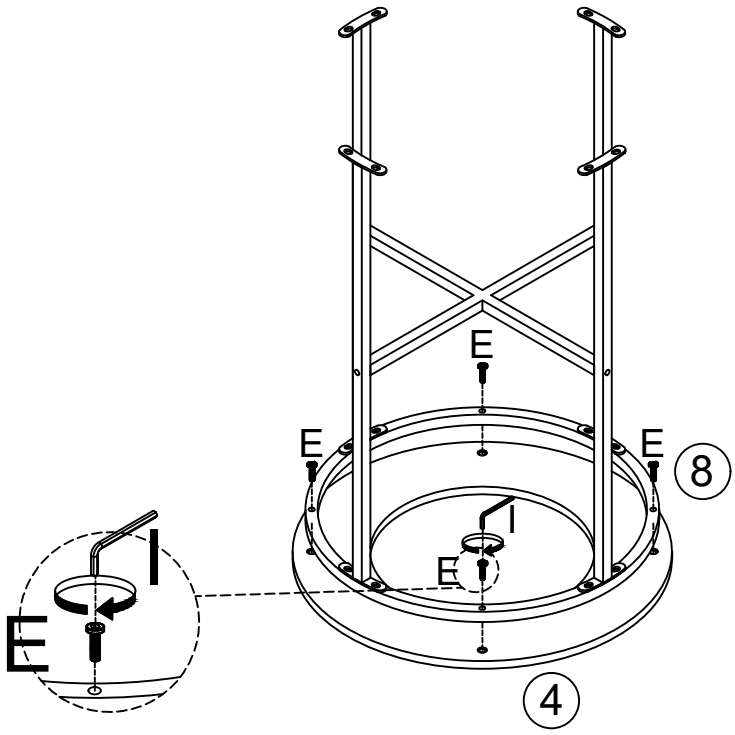

x 2

6

D	x 16
	
ϕ 6X10mm	

I	x 1
	

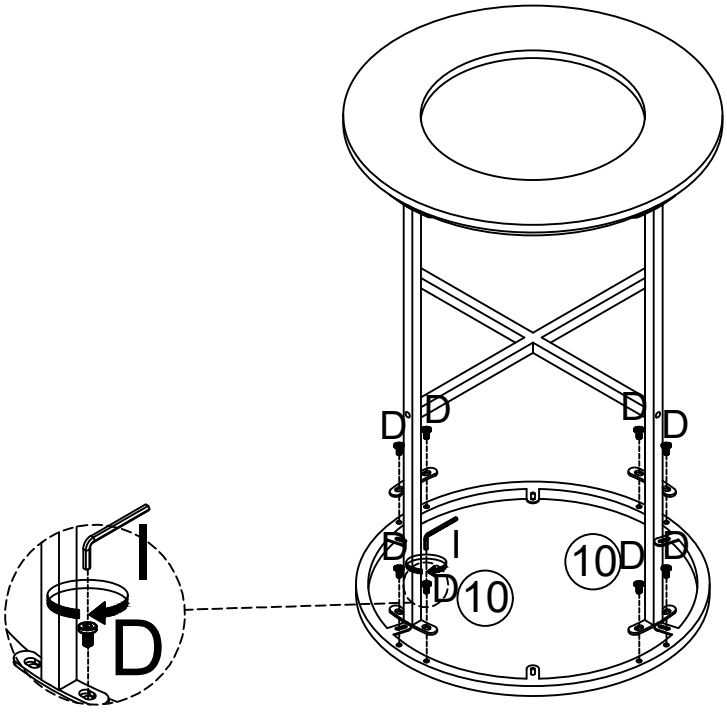

x 2

7

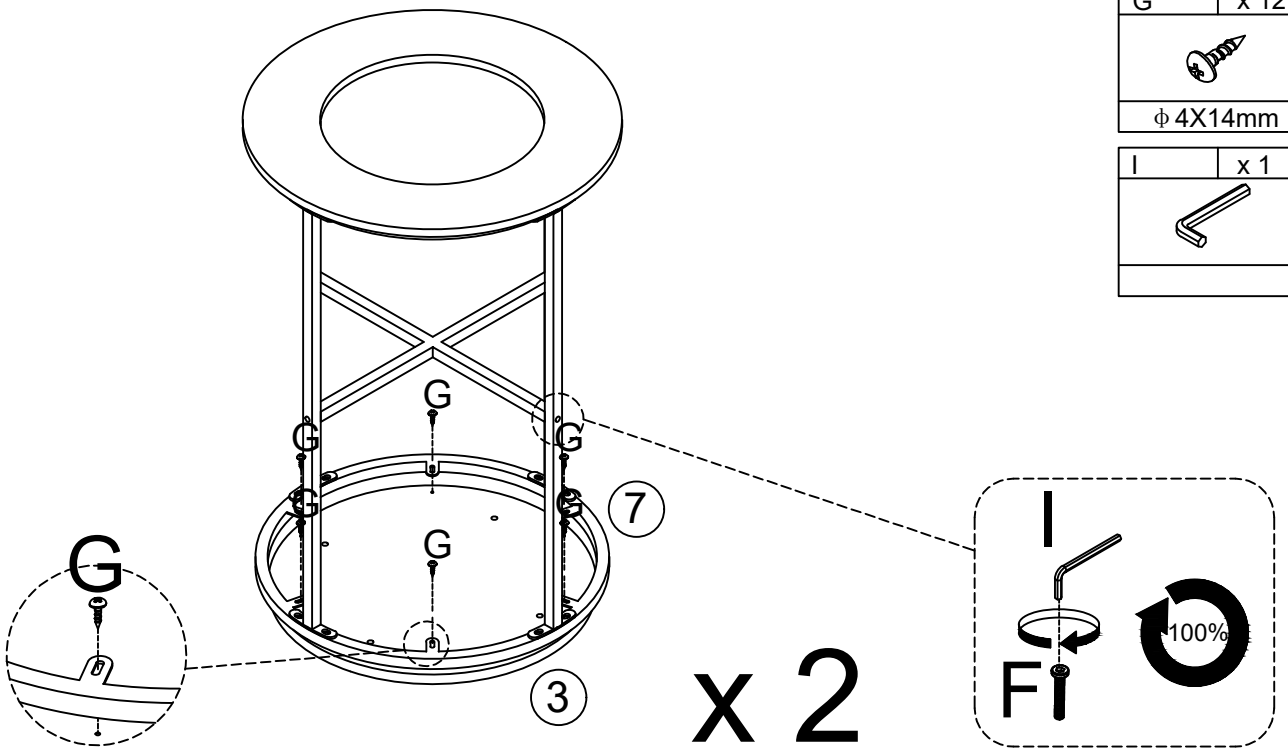

G	x 12
ϕ 4X14mm	

I	x 1

Tighten Screw F to 100%

8

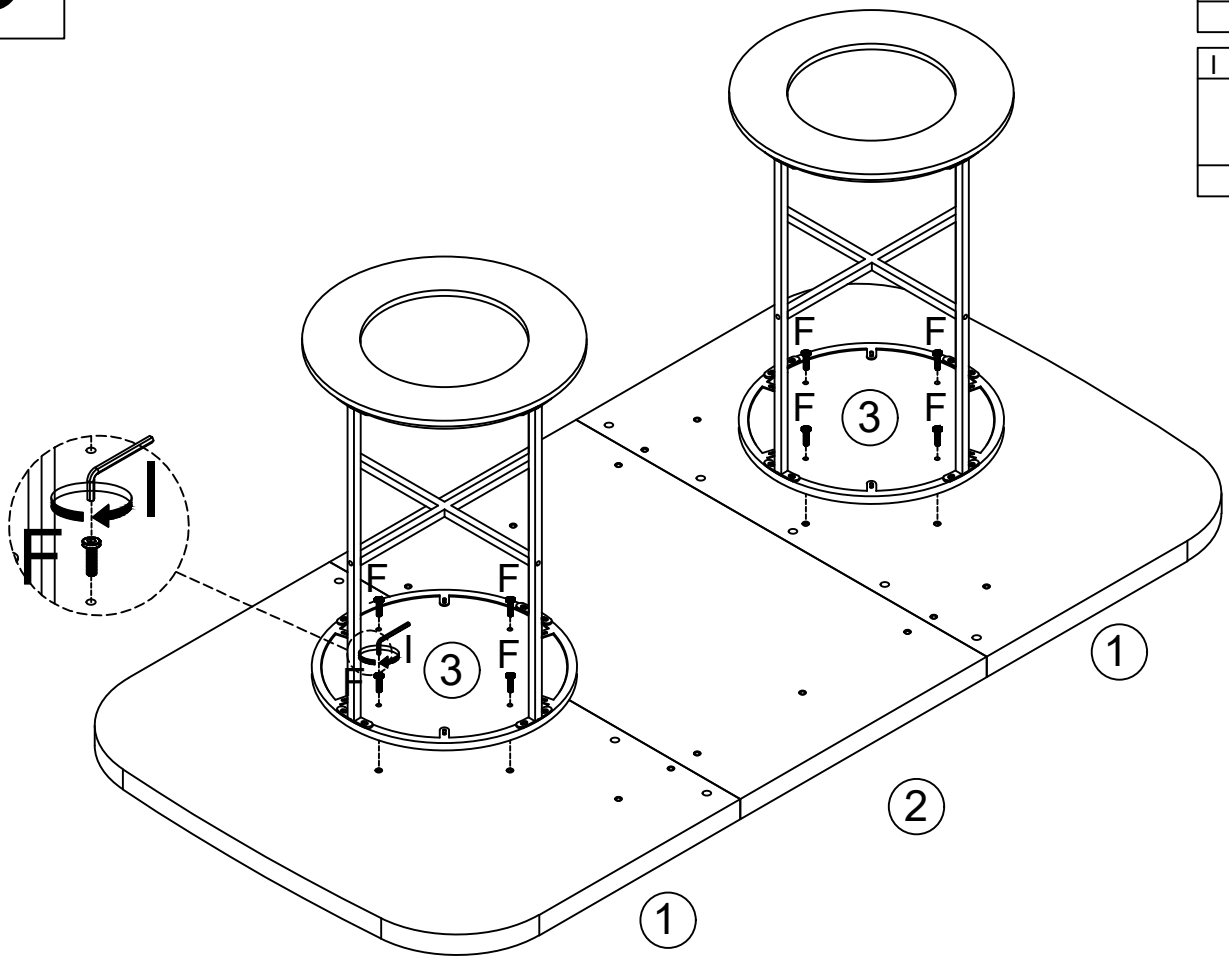

F	x 8
ϕ 6X30mm	

I	x 1

9

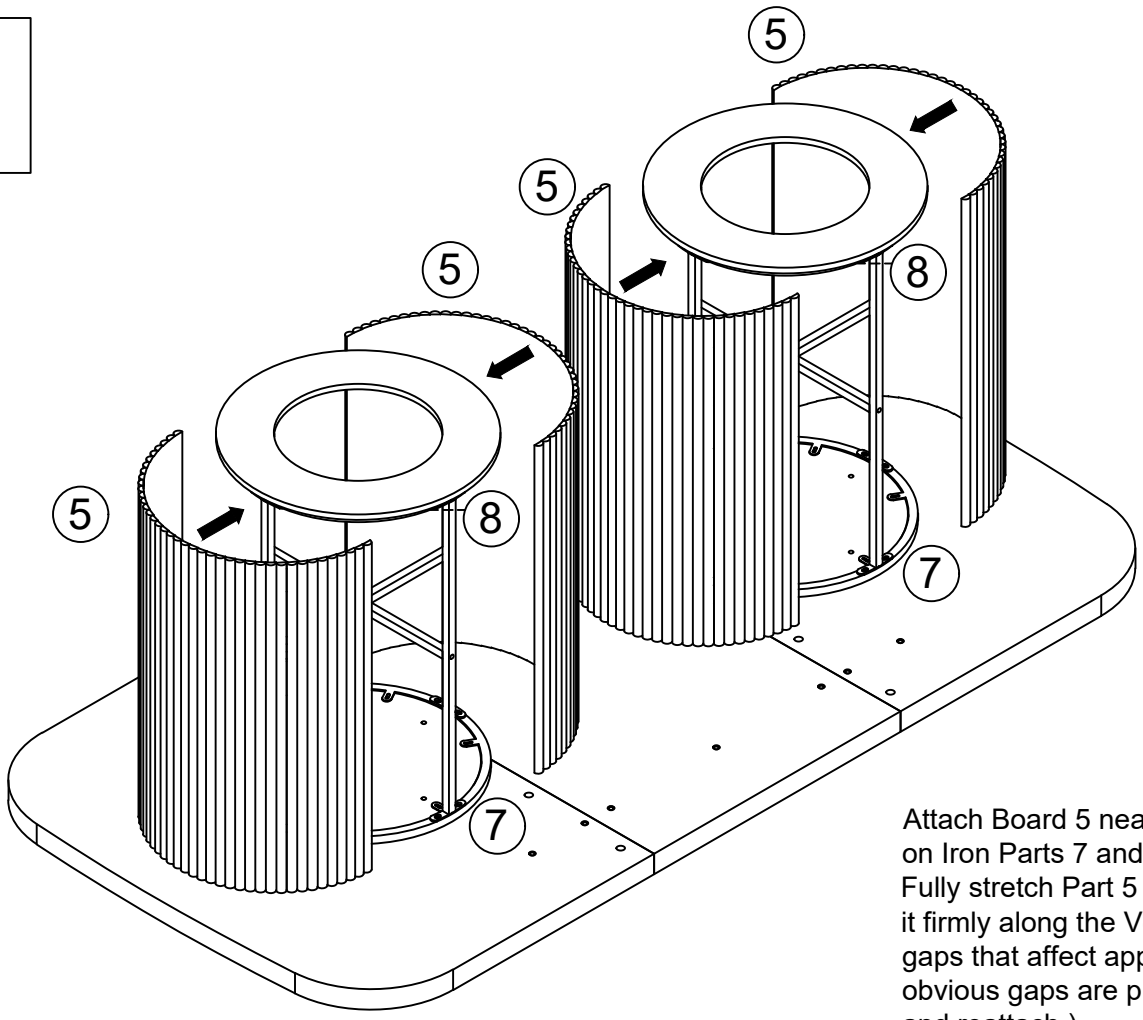

Attach Board 5 neatly to the Velcro on Iron Parts 7 and 8. (Caution: Fully stretch Part 5 first, then press it firmly along the Velcro to avoid gaps that affect appearance. If obvious gaps are present, peel it off and reattach.)

10

H	x 8

F	x 14
ϕ 6X30mm	

I	x 1

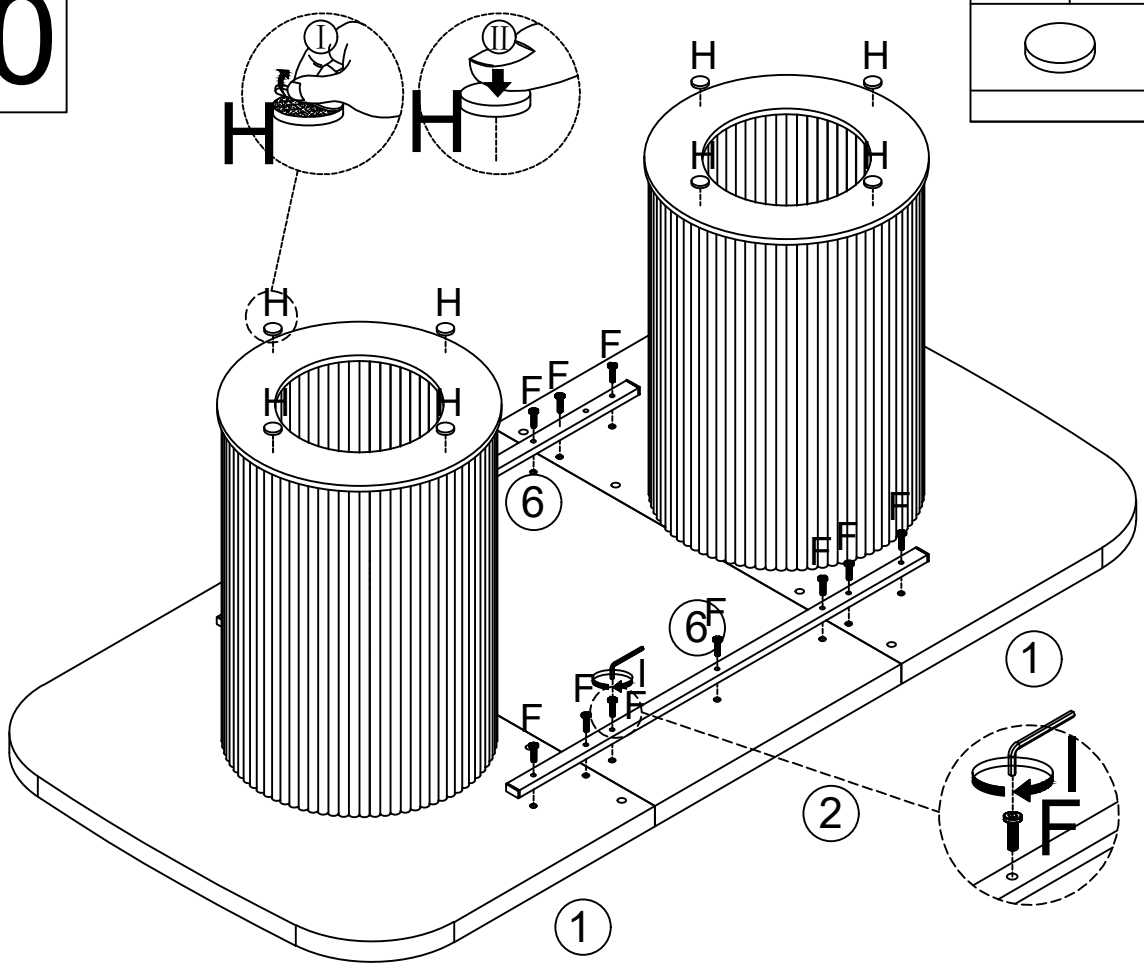

11

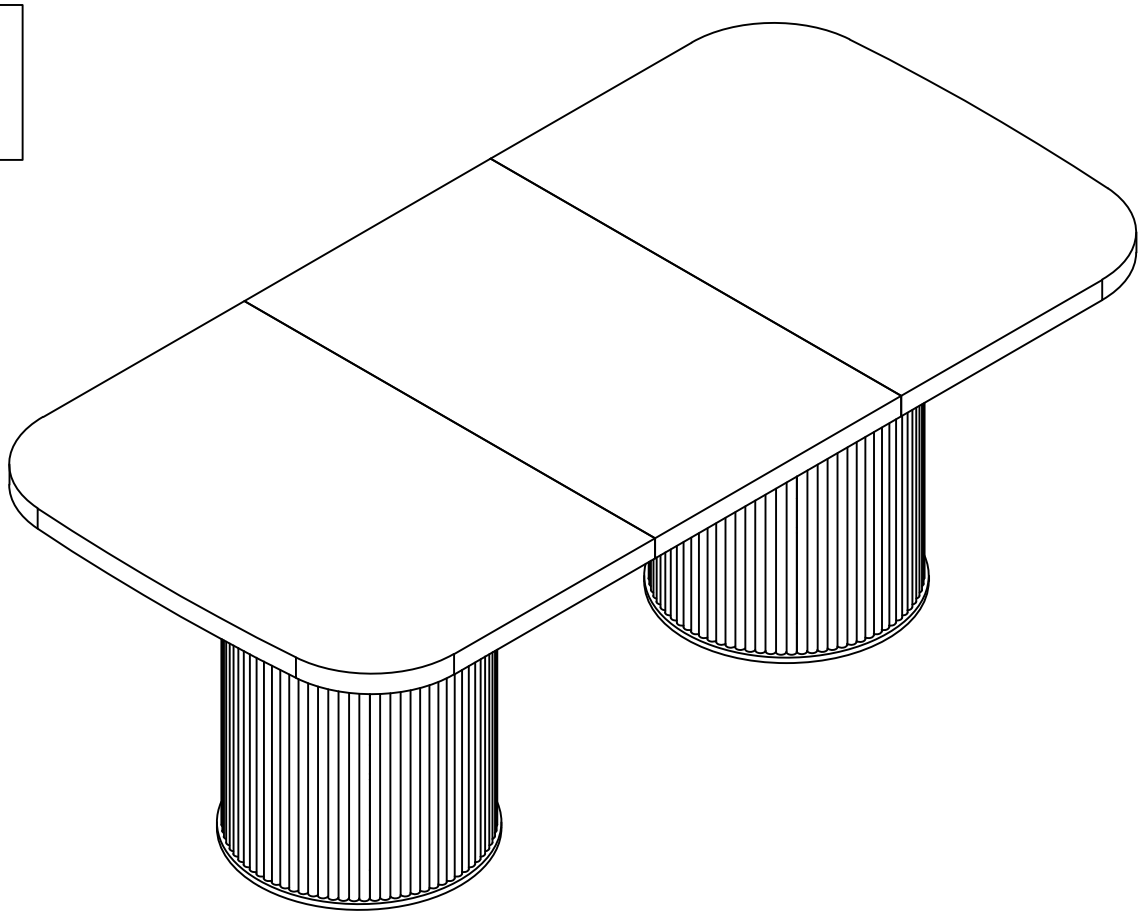

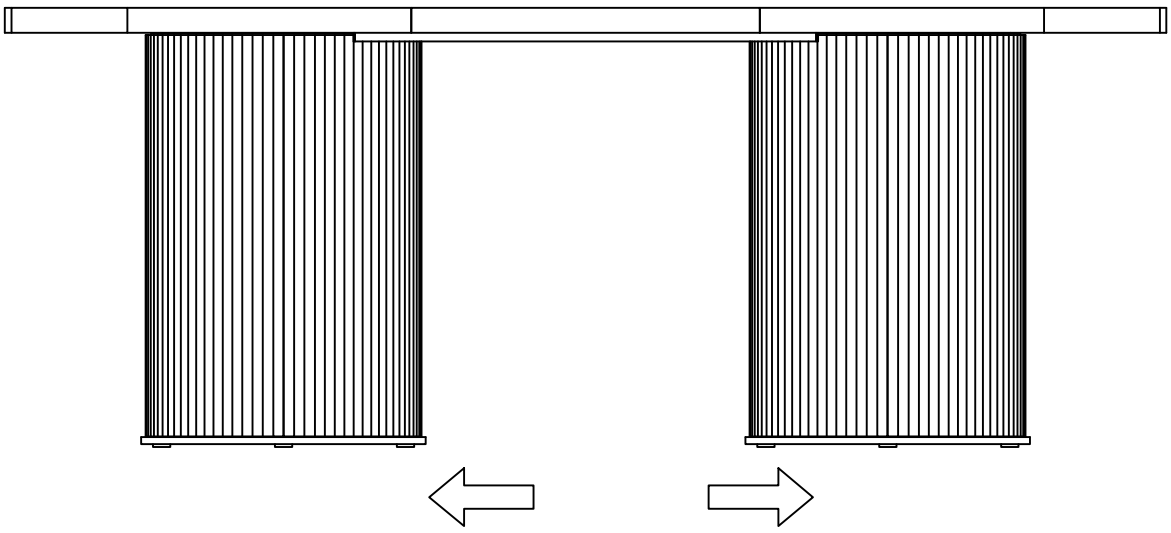



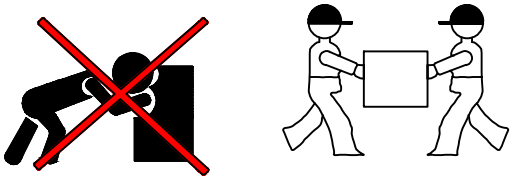

Two people work together to move the table.
Make sure you lift it off the ground.
Don't push and pull.

【Kindly Remember】

If the products you receive in this package are not all of the items you purchased, please be patient. The rest of the products will be delivered by other packages.
If you would like to know where the rest of the package has arrived, please contact us through Amazon. We will get back to you within 12 hours.

You can contact us in the following ways：

1.Find your order in the list and Select 【Problem with order】.

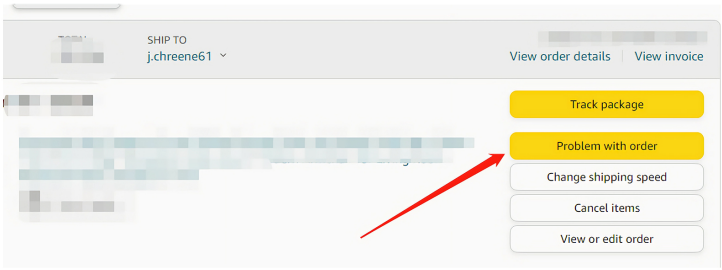

2. Choose your topic from list displayed and Select 【Contact seller】.

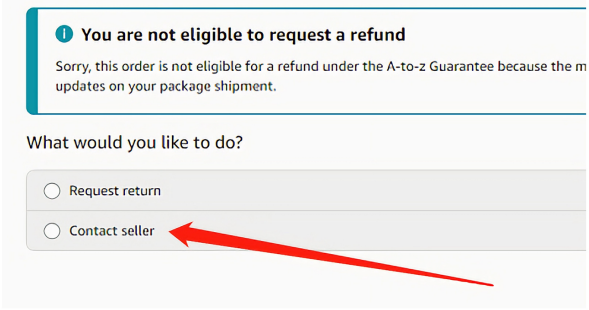

3. We will get back to you immediately as soon as we receive your message.