Installation & Assembly

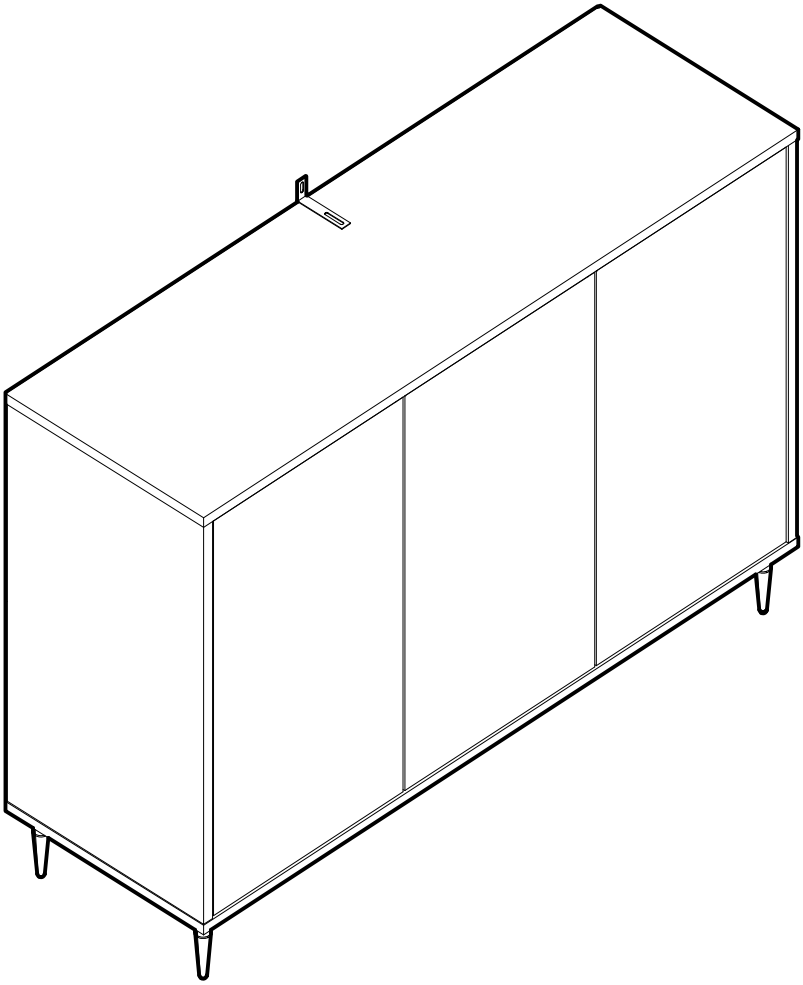

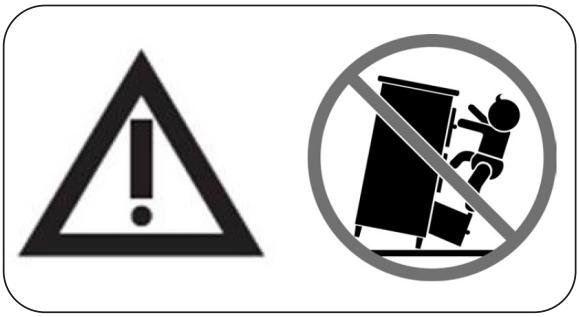


WARNING
Children have died from furniture tipover.
• ALWAYS secure it with an anchor device.
• NEVER allow children to stand, climb or hang on drawers, doors, or shelves.
• NEVER open more than one drawer at a time.
• Place heavy items down low.
NEVER put a TV on this furniture
TV

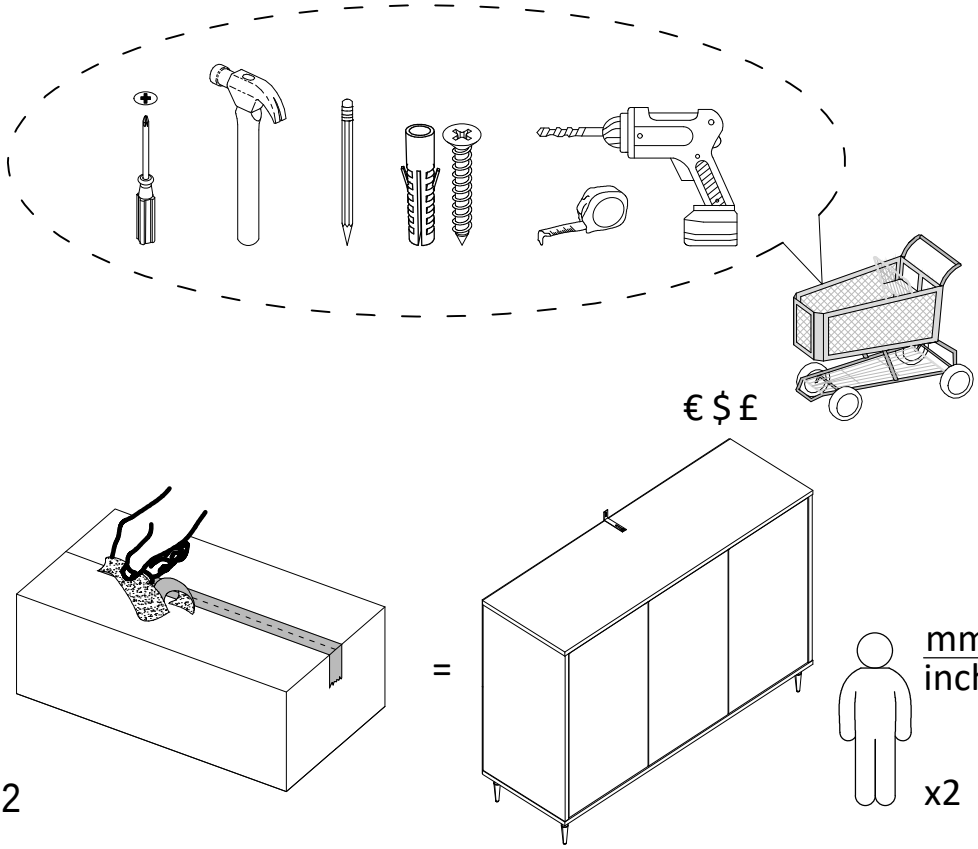
€ $ £
=
mm
inch
x2

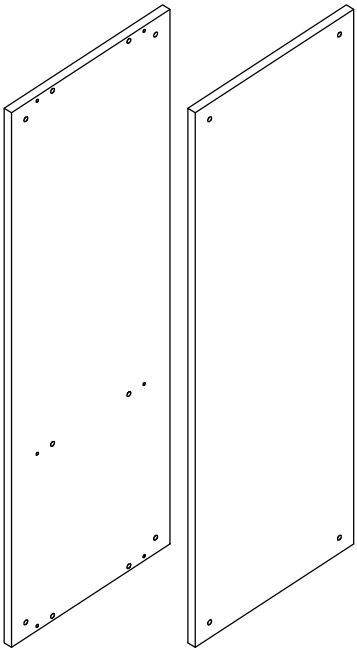

Ax1

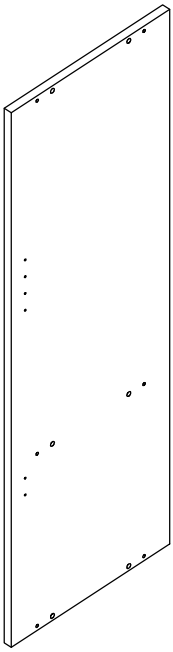

Bx1

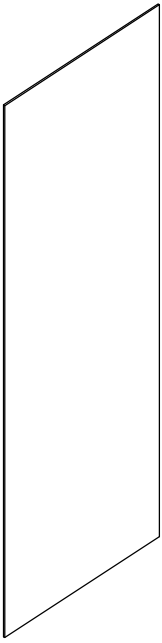

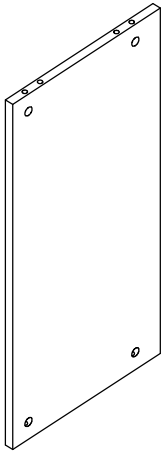

658x309
25.9x12.2

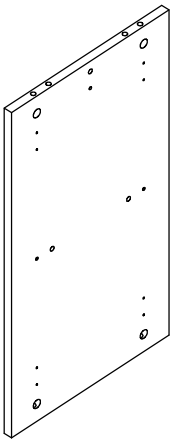

3 Cx2 Dx1 Ex2

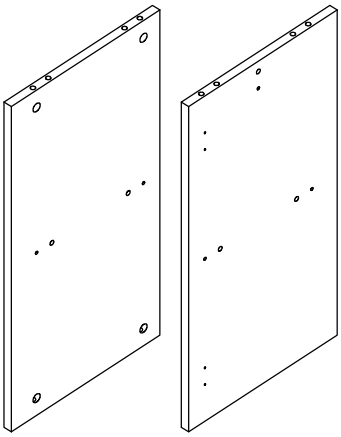

Fx1

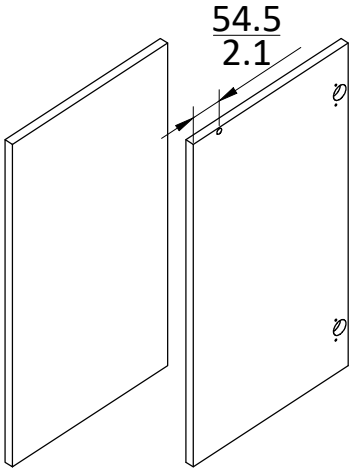

Gx1

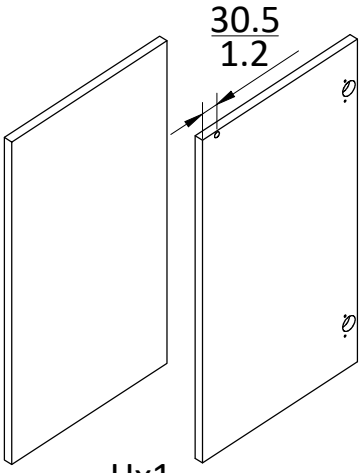

Hx1

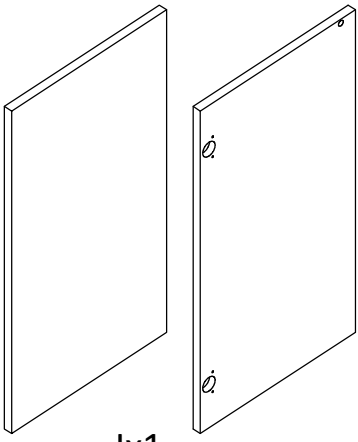

Ix1



Jx1

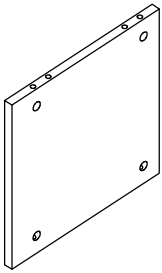

Kx1

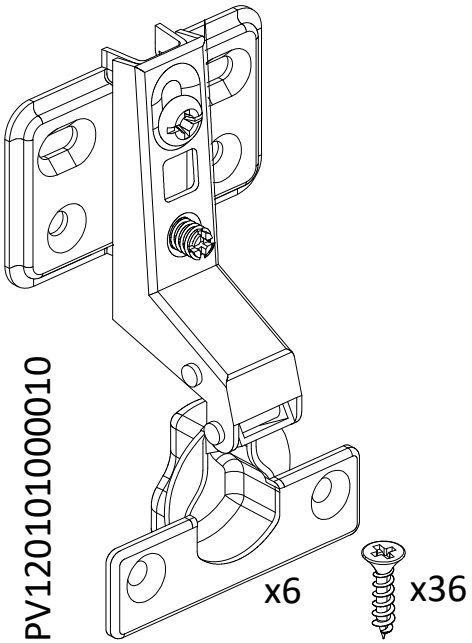

Lx6

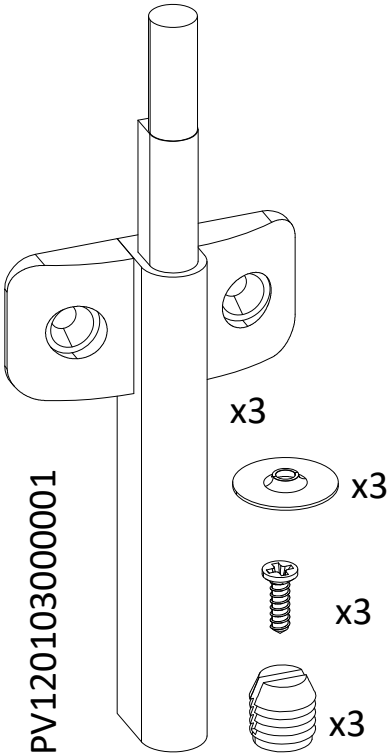

Mx3

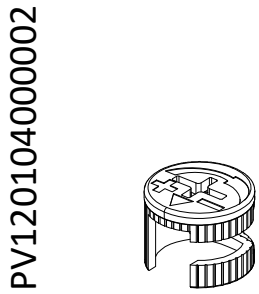

Nx23

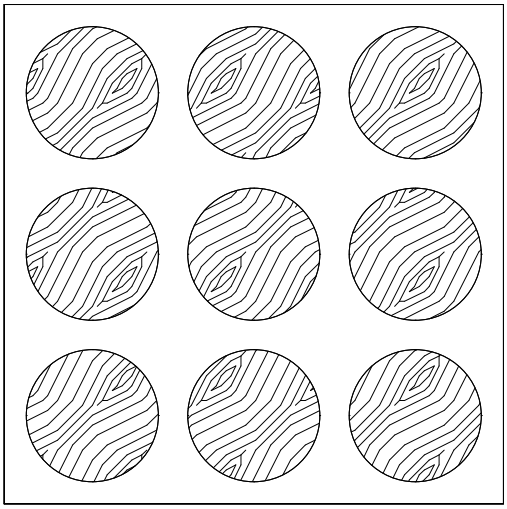

Ox4

6

PV120106000034

Vx1

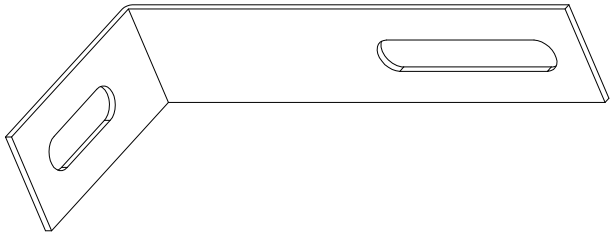

PV120105000020

Sx6

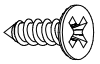

PV120105000001

Px22

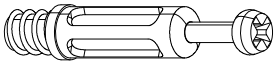

PV120110000061

Wx4

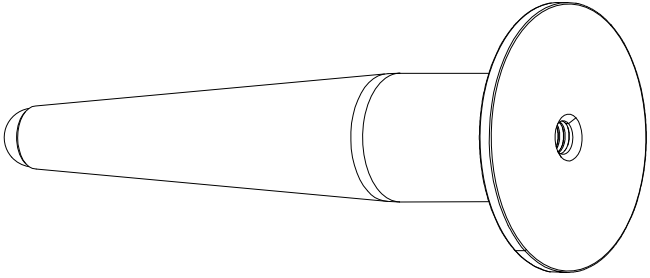

PV120105000023

Tx1

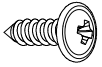

PV120105000003

Qx22



PV120112000001

Xx1



PV120105000031

Ux4

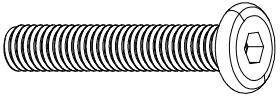

PV120105000005

Rx62

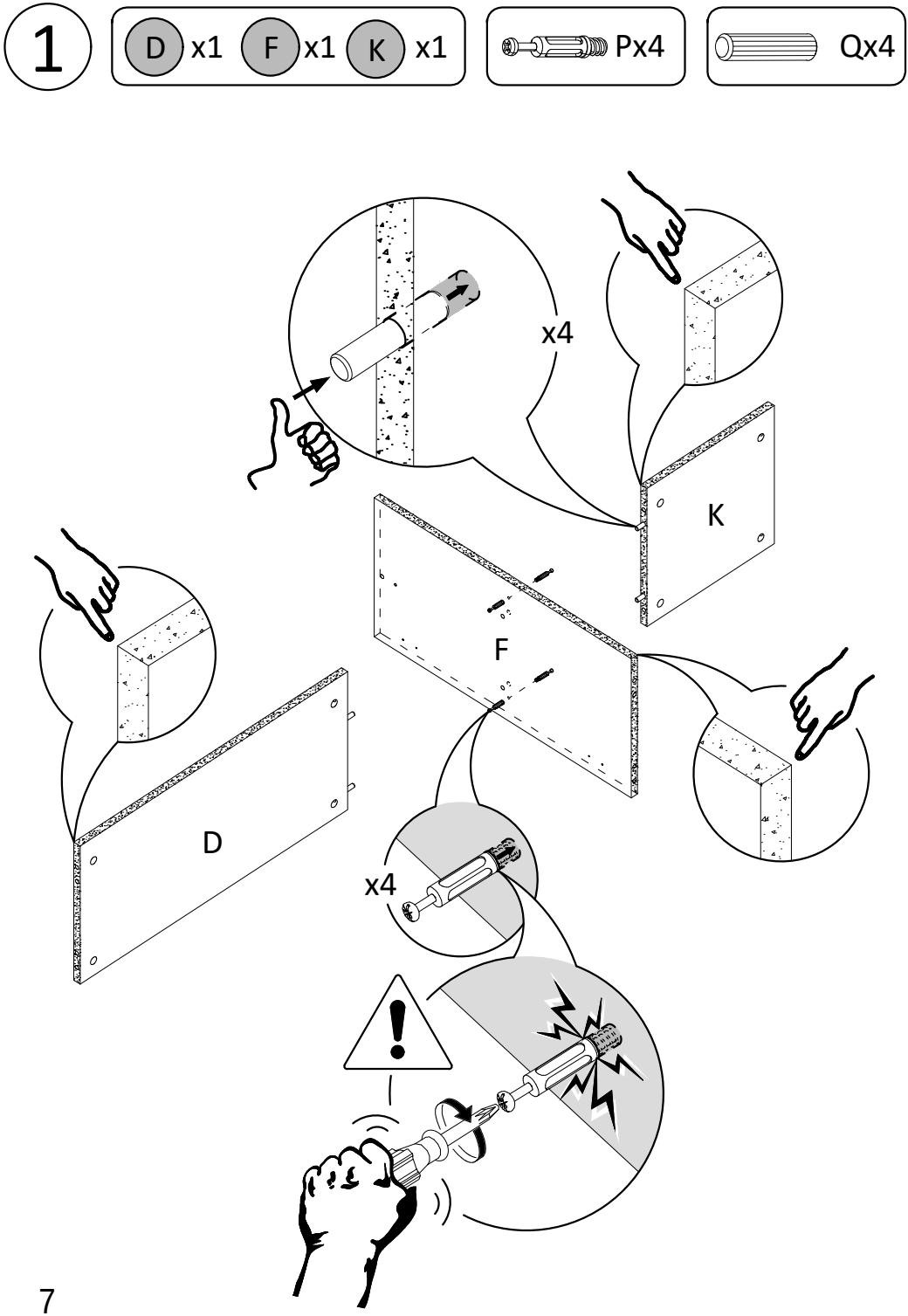
1
D x1
F x1
K x1
Px4
Qx4
x4
K
F
D
x4

2



Nx4

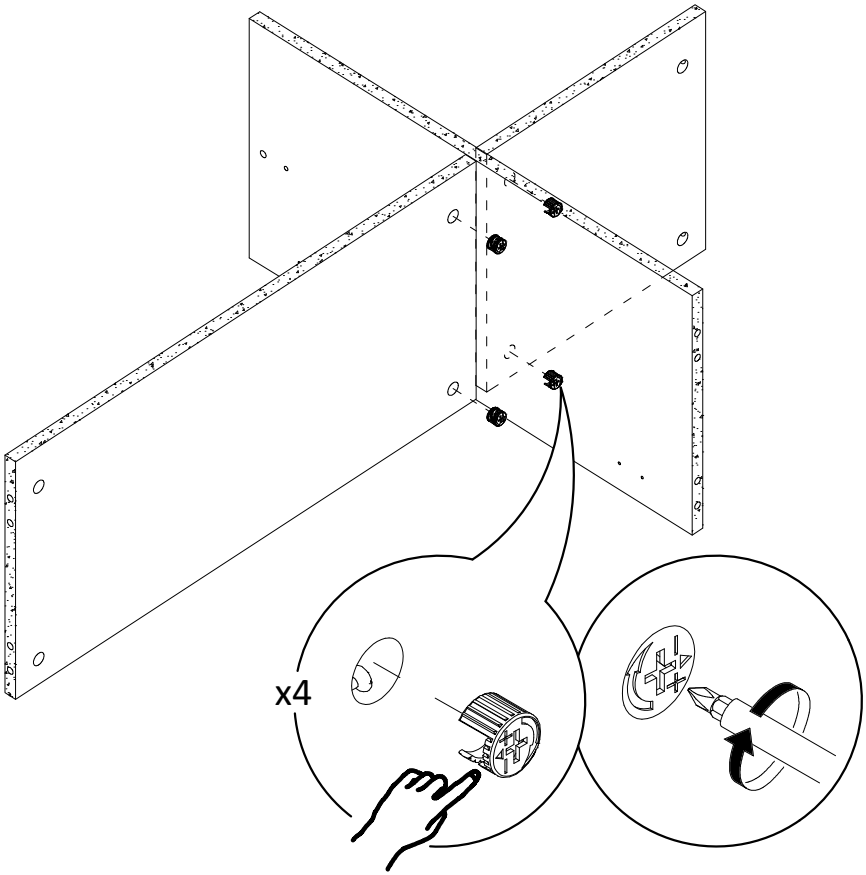

3

E x2 J x1

Px6

Qx6

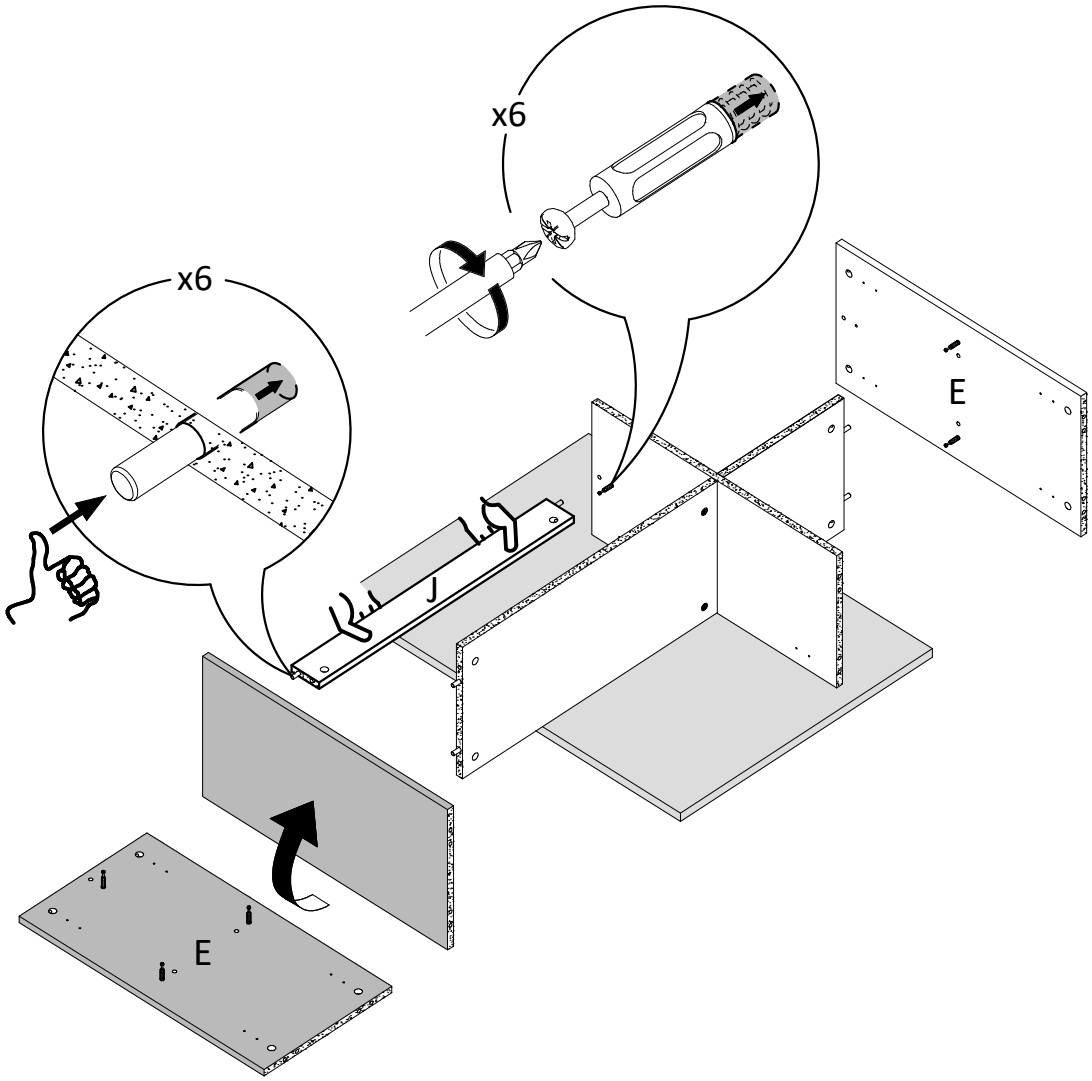

4



Nx6

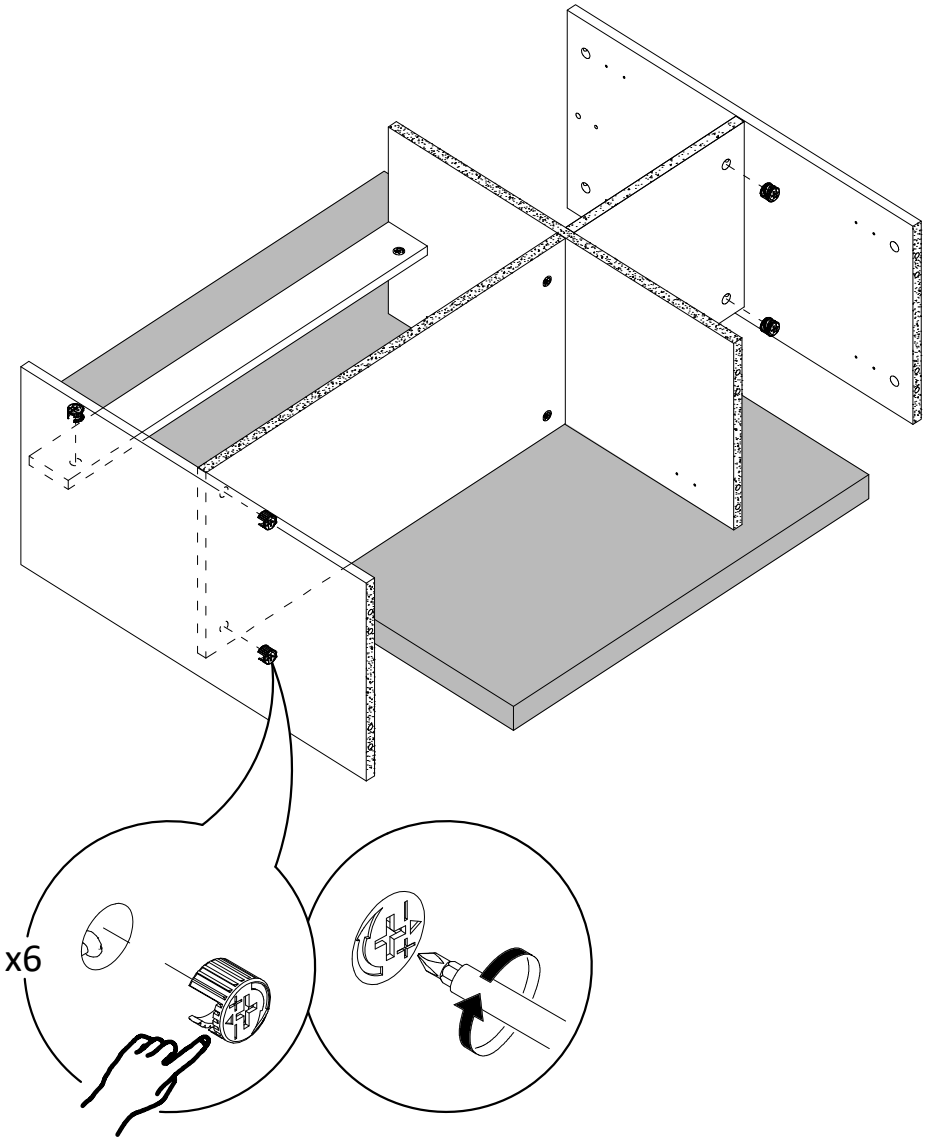

5

B x1

Mx3

Sx6

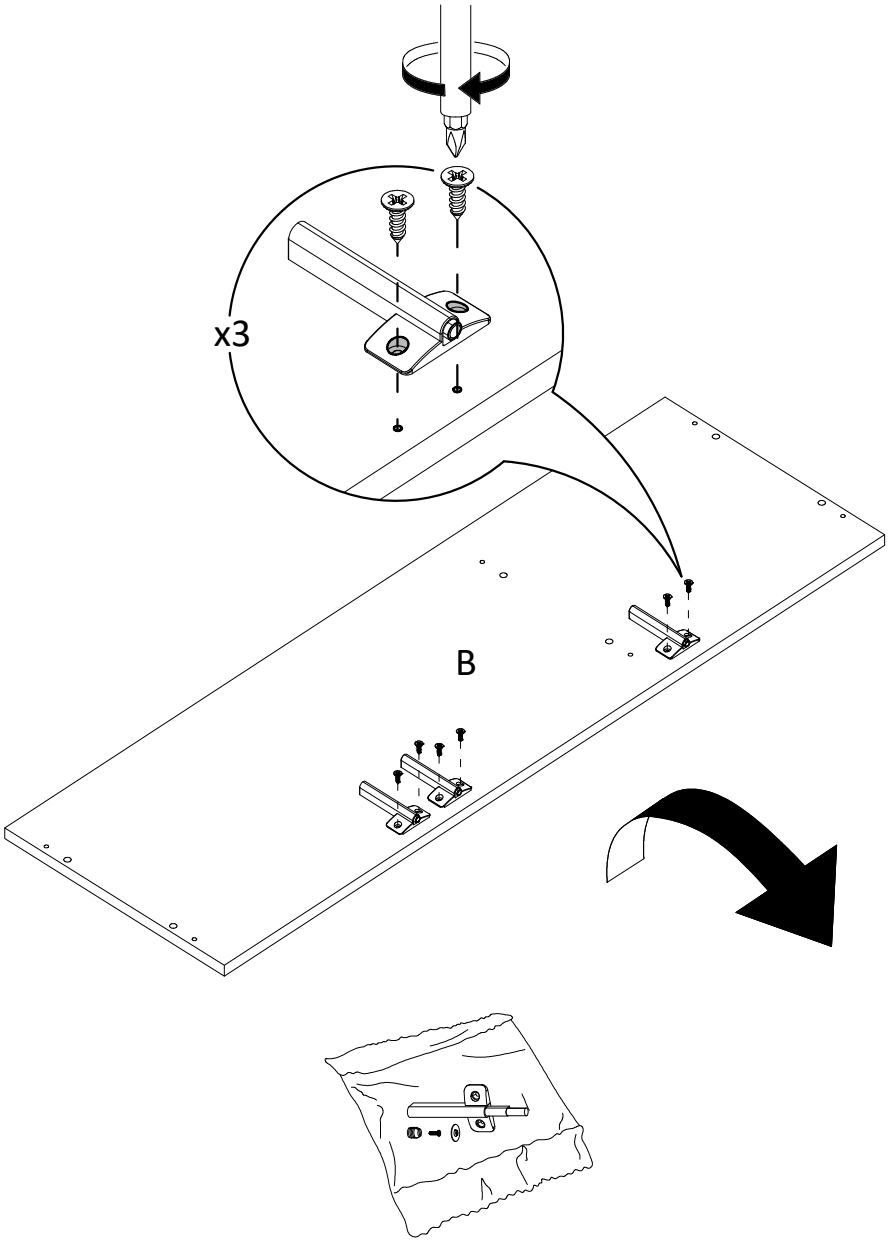

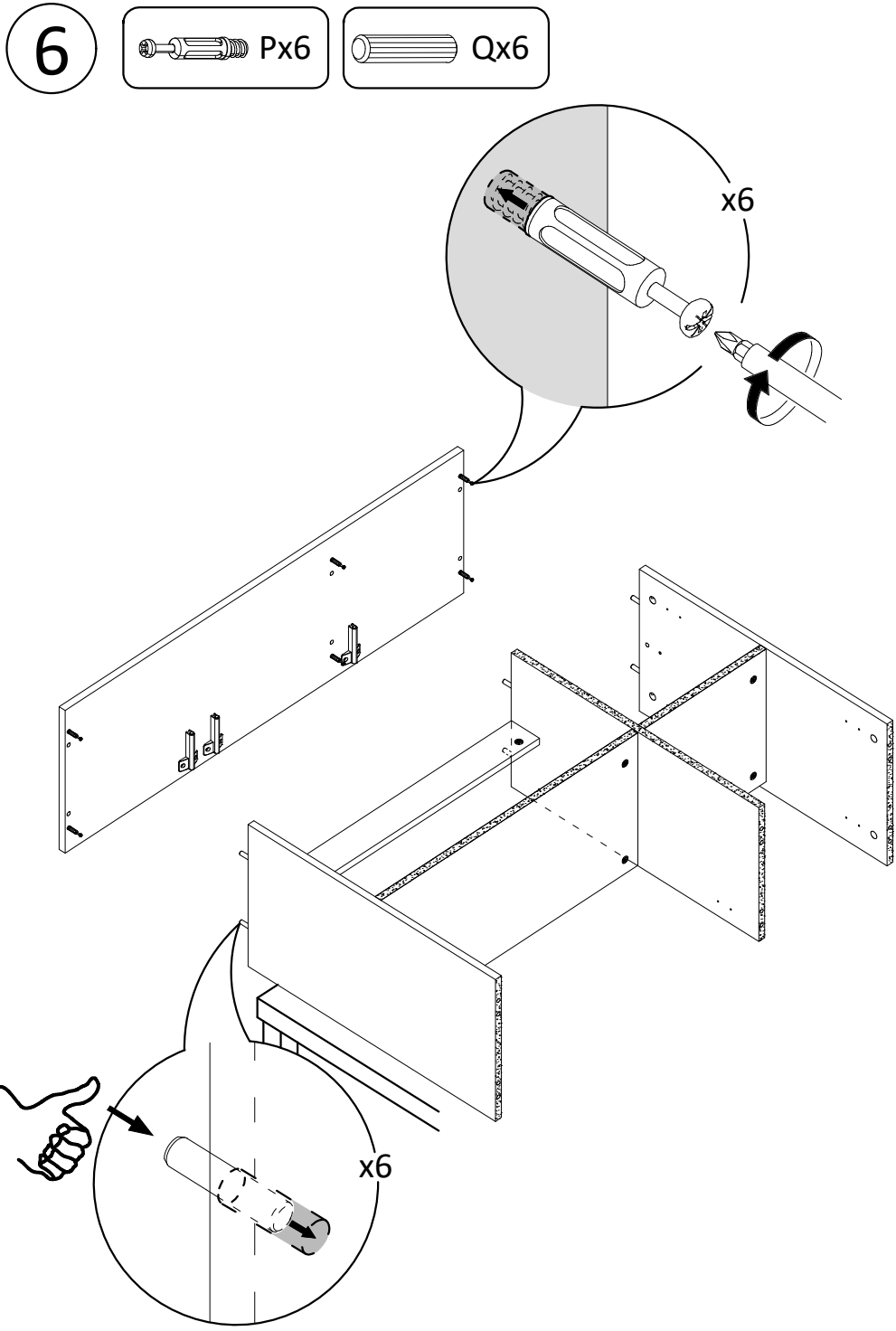
6
Px6
Qx6
x6
x6

7



Nx6

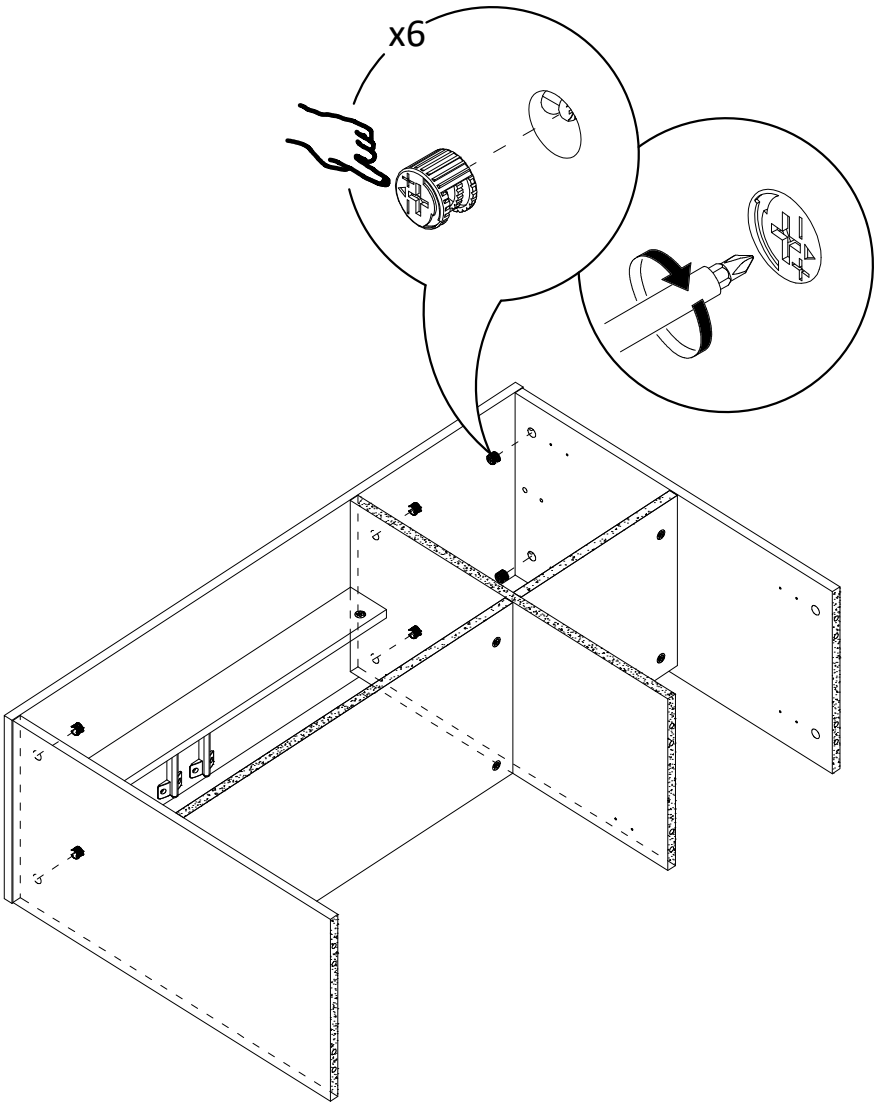

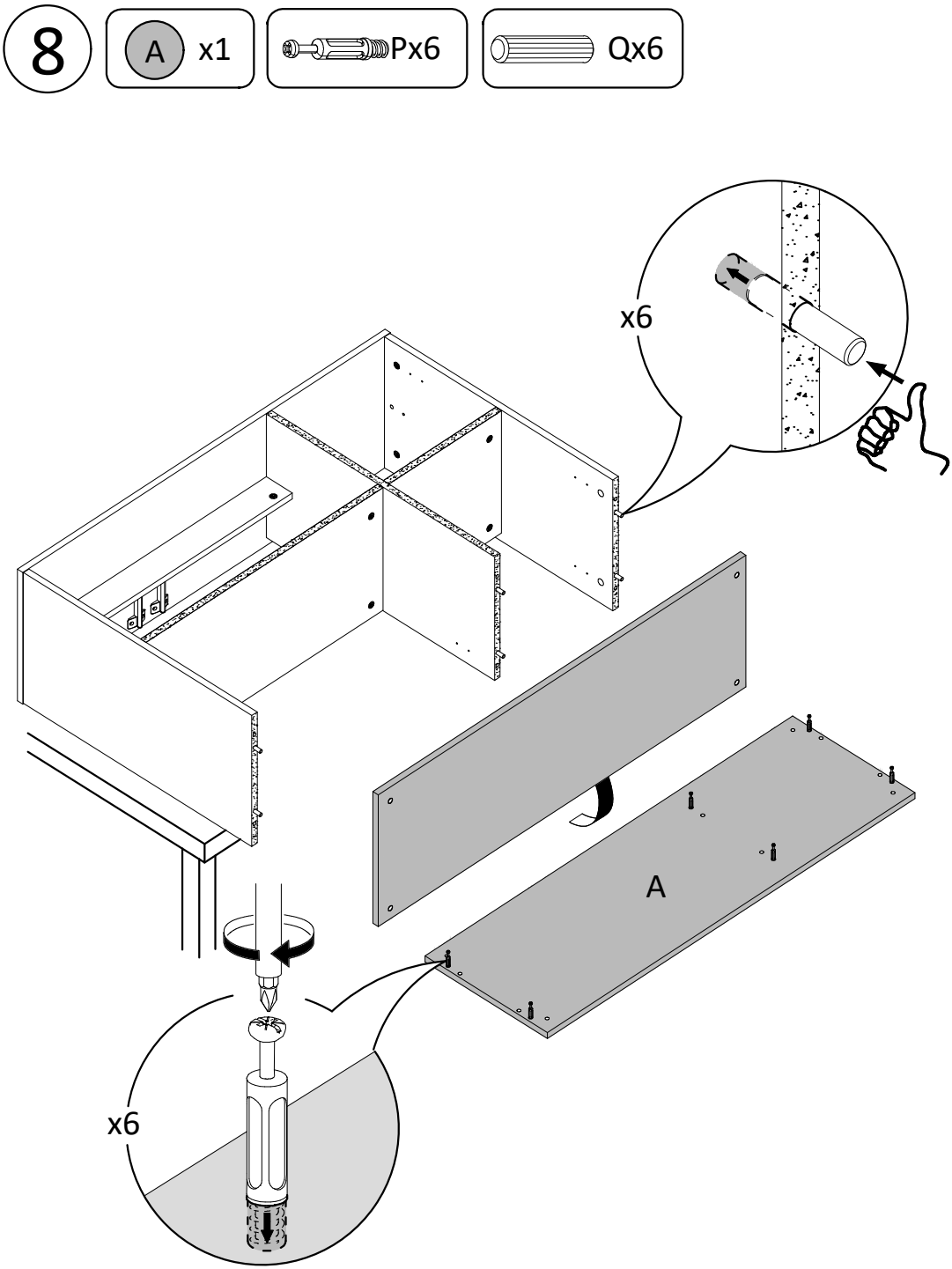
8
A x1
Px6
Qx6
x6
A
x6

9



Nx6

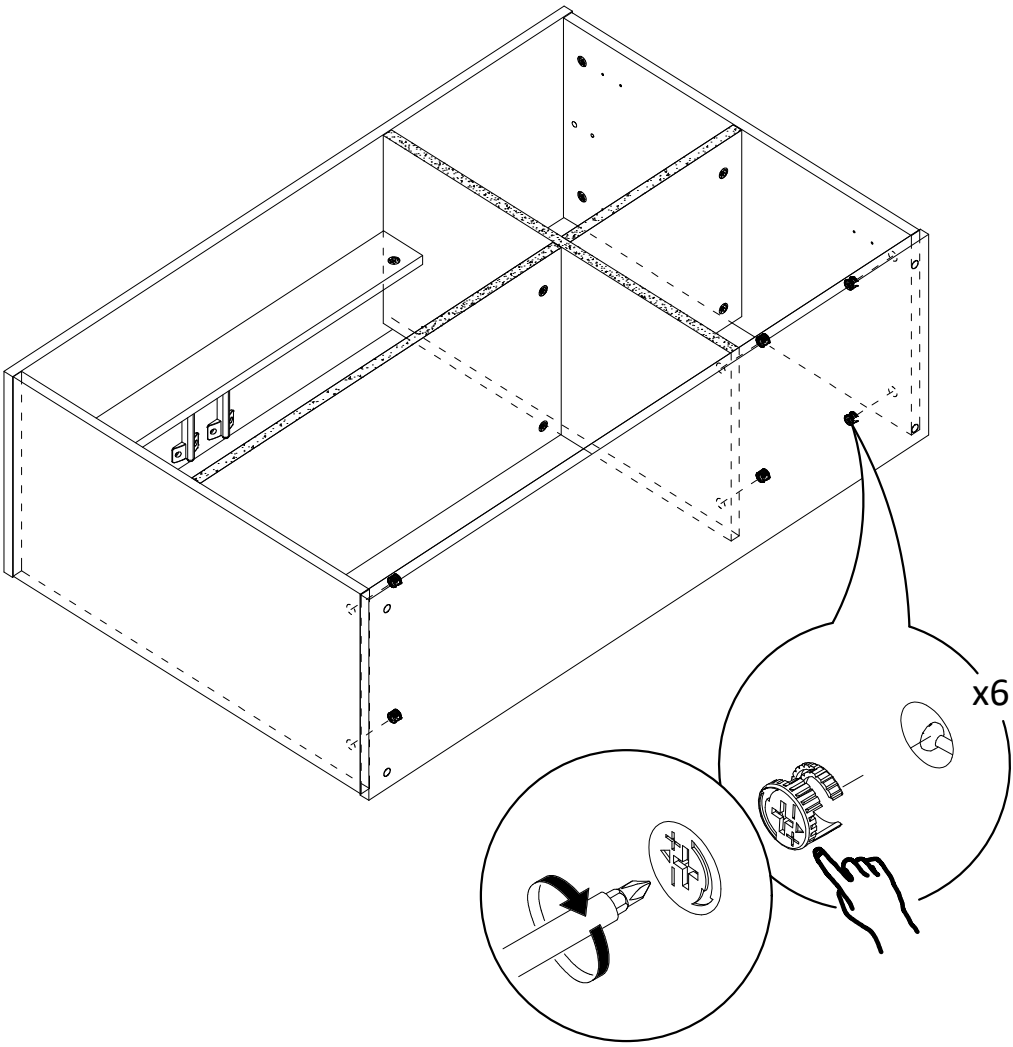

10

Ux4

Wx4

Xx1

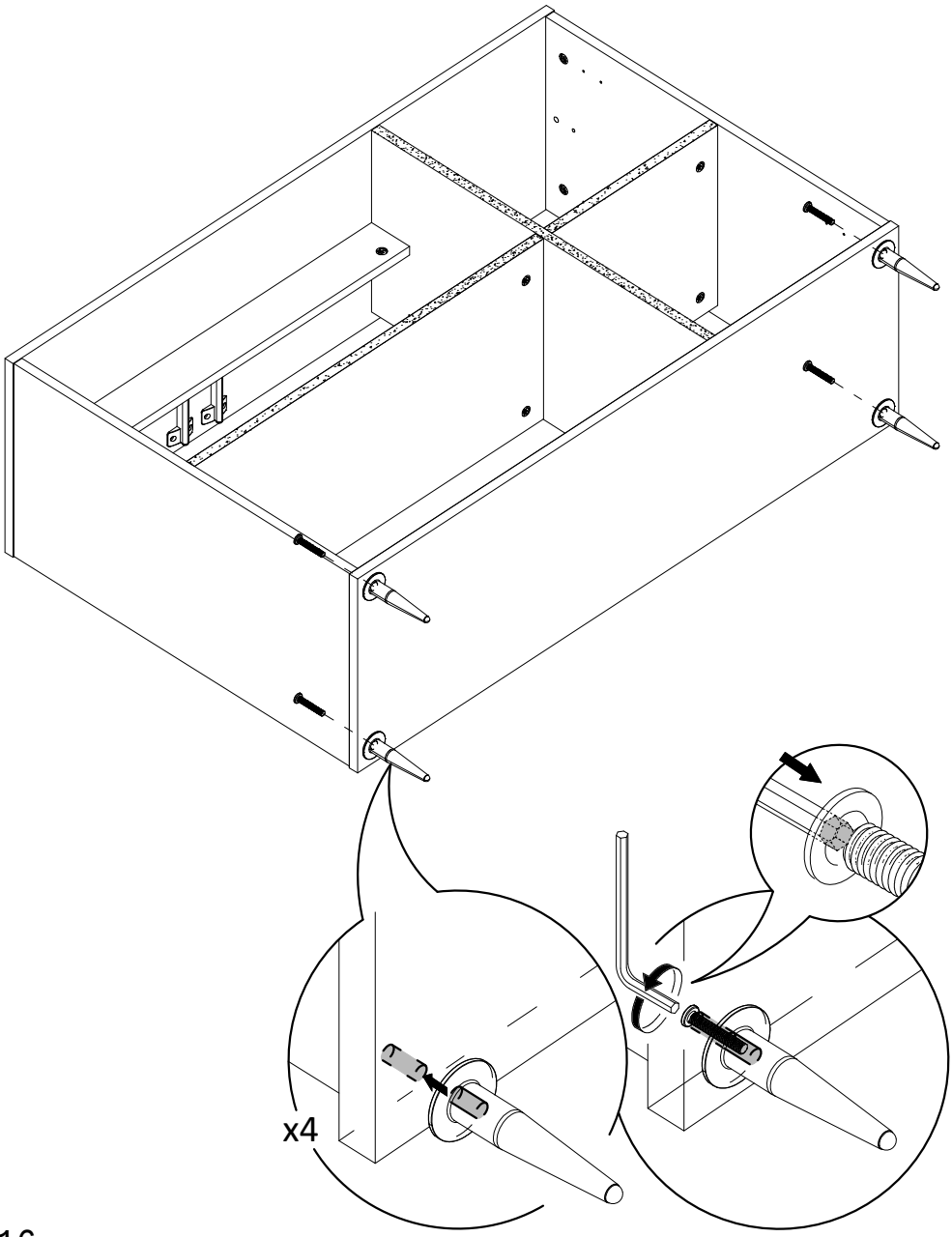

11

C x2

Rx62

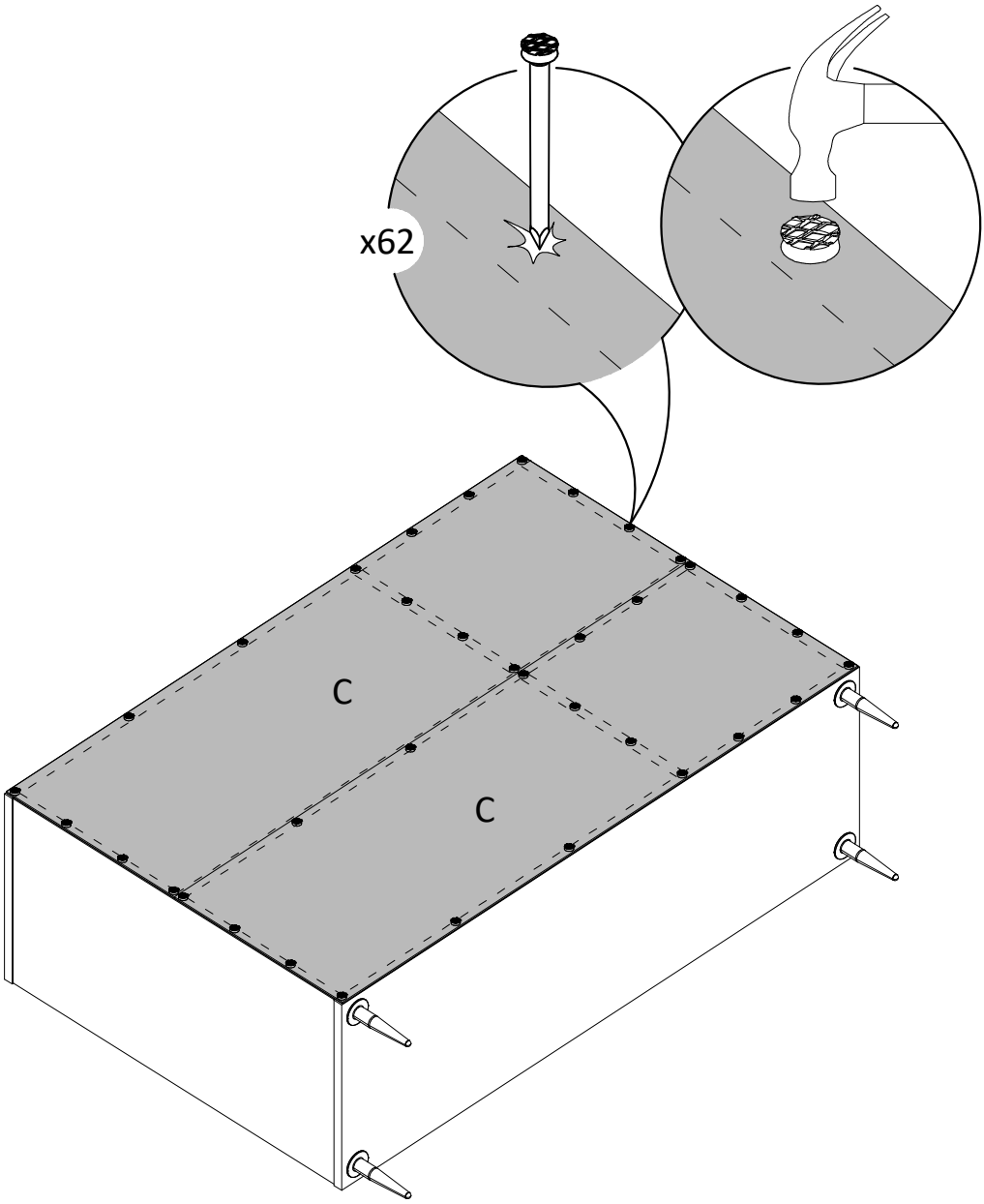

12

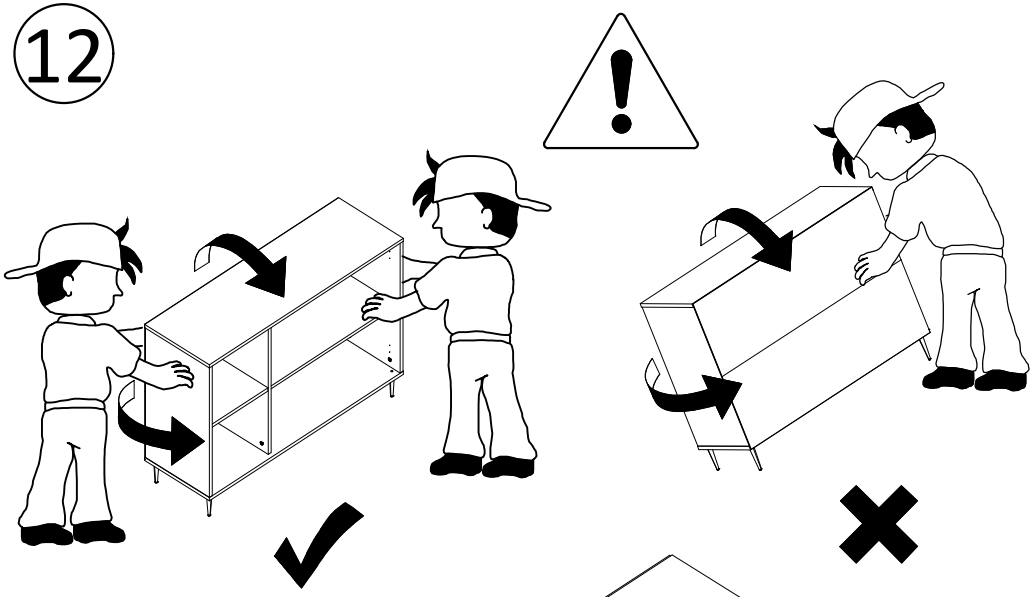

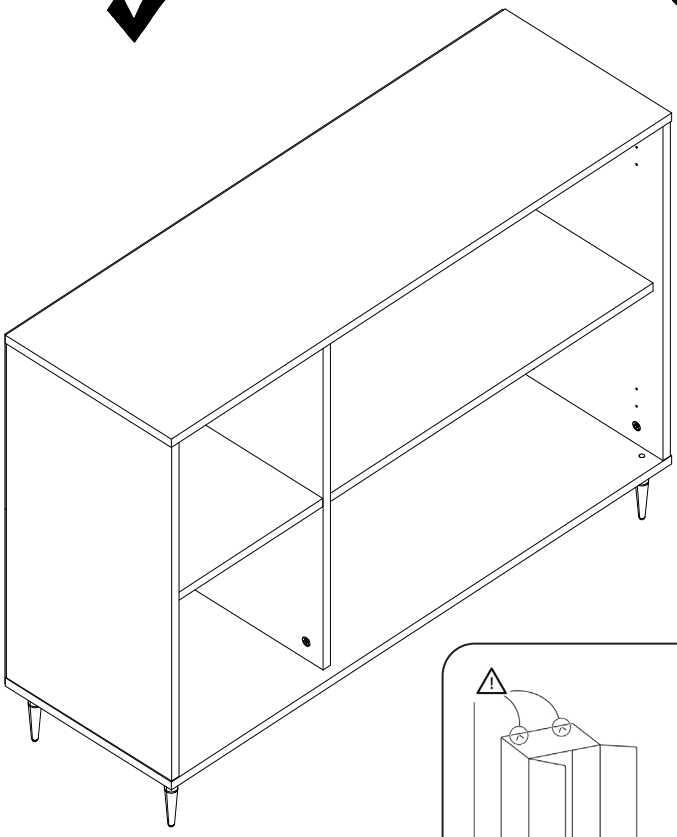

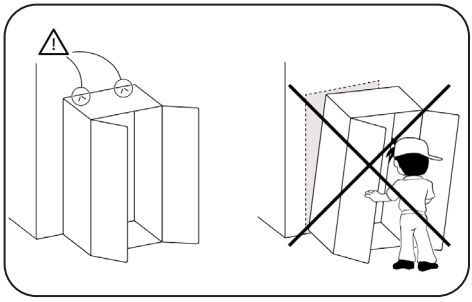

13

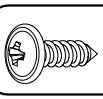
Tx1

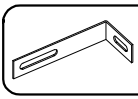
Vx1

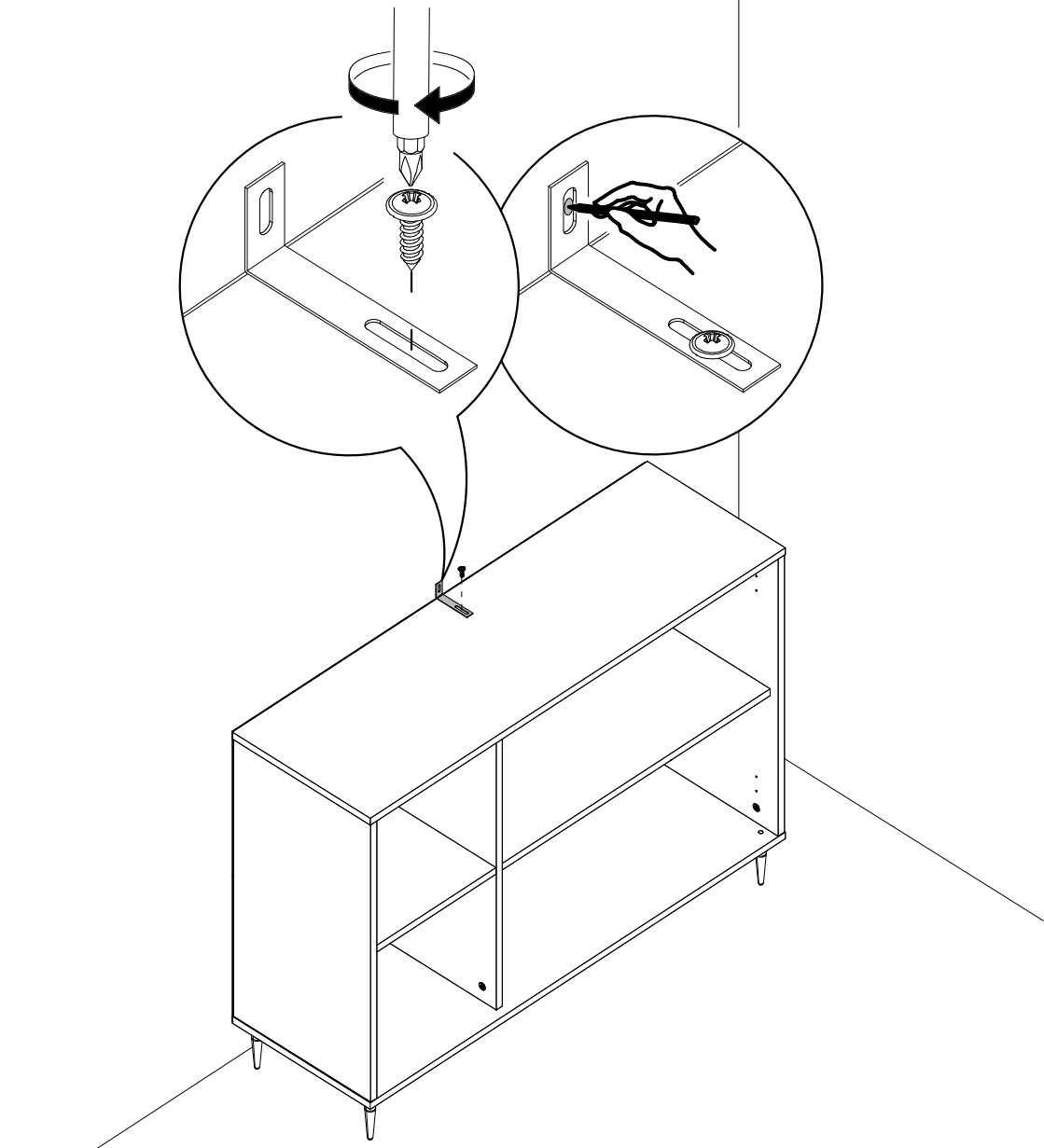

14

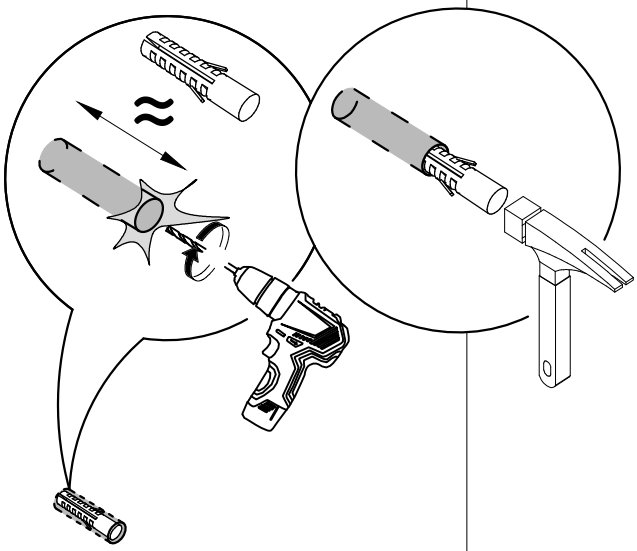

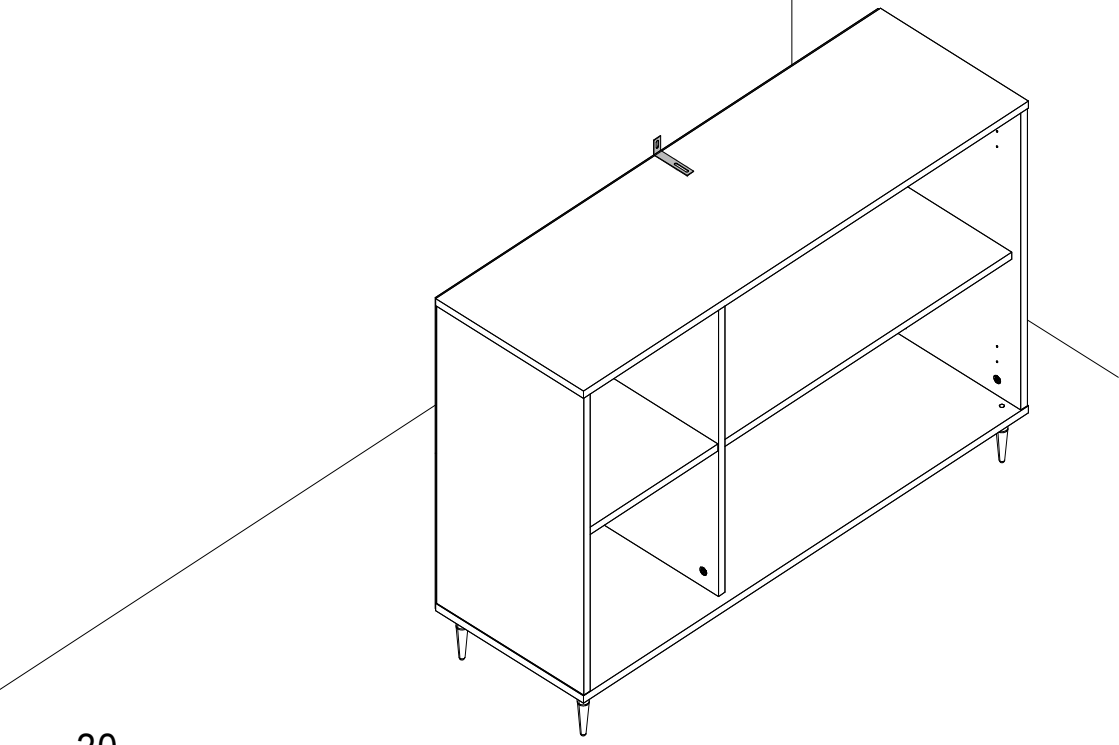

15

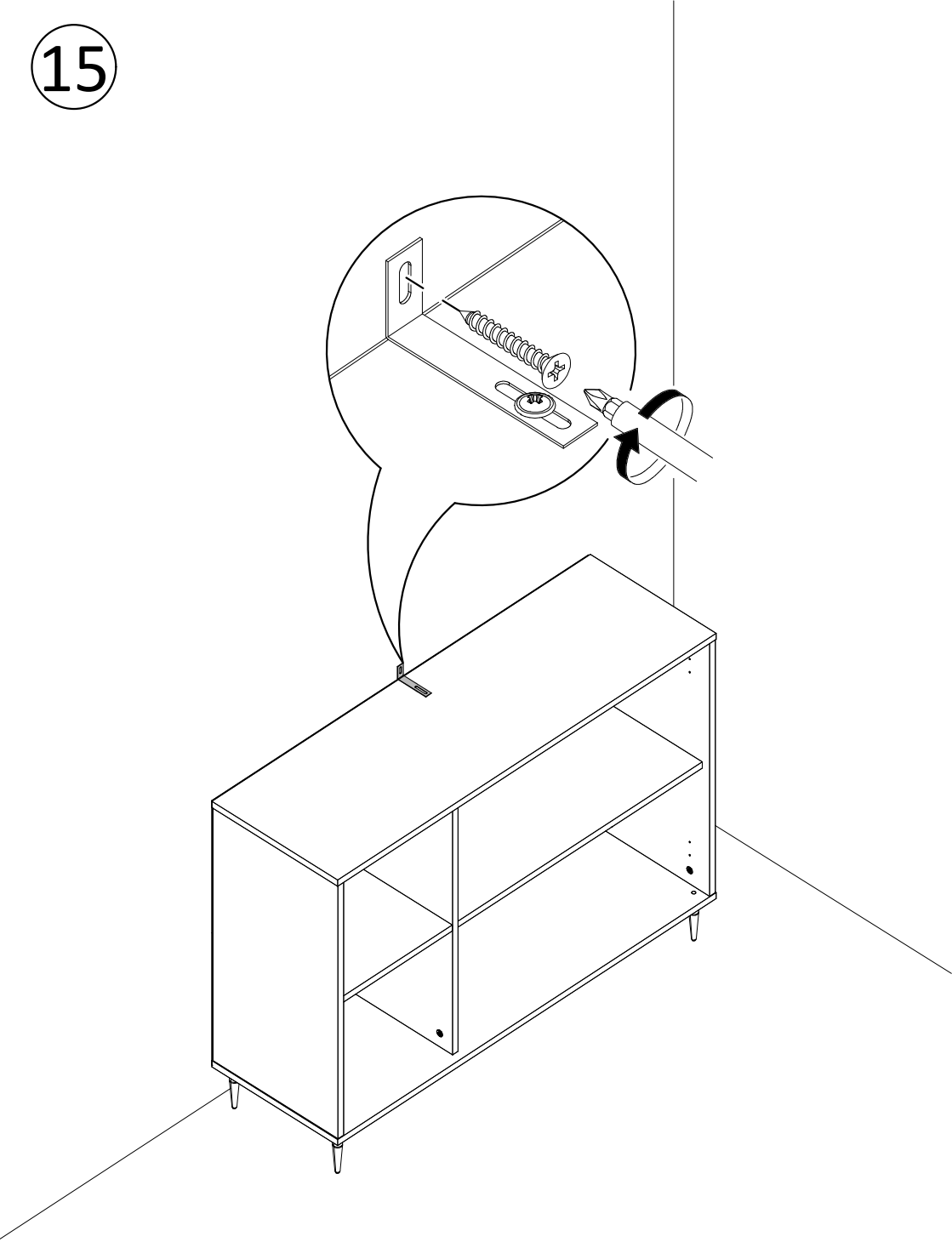

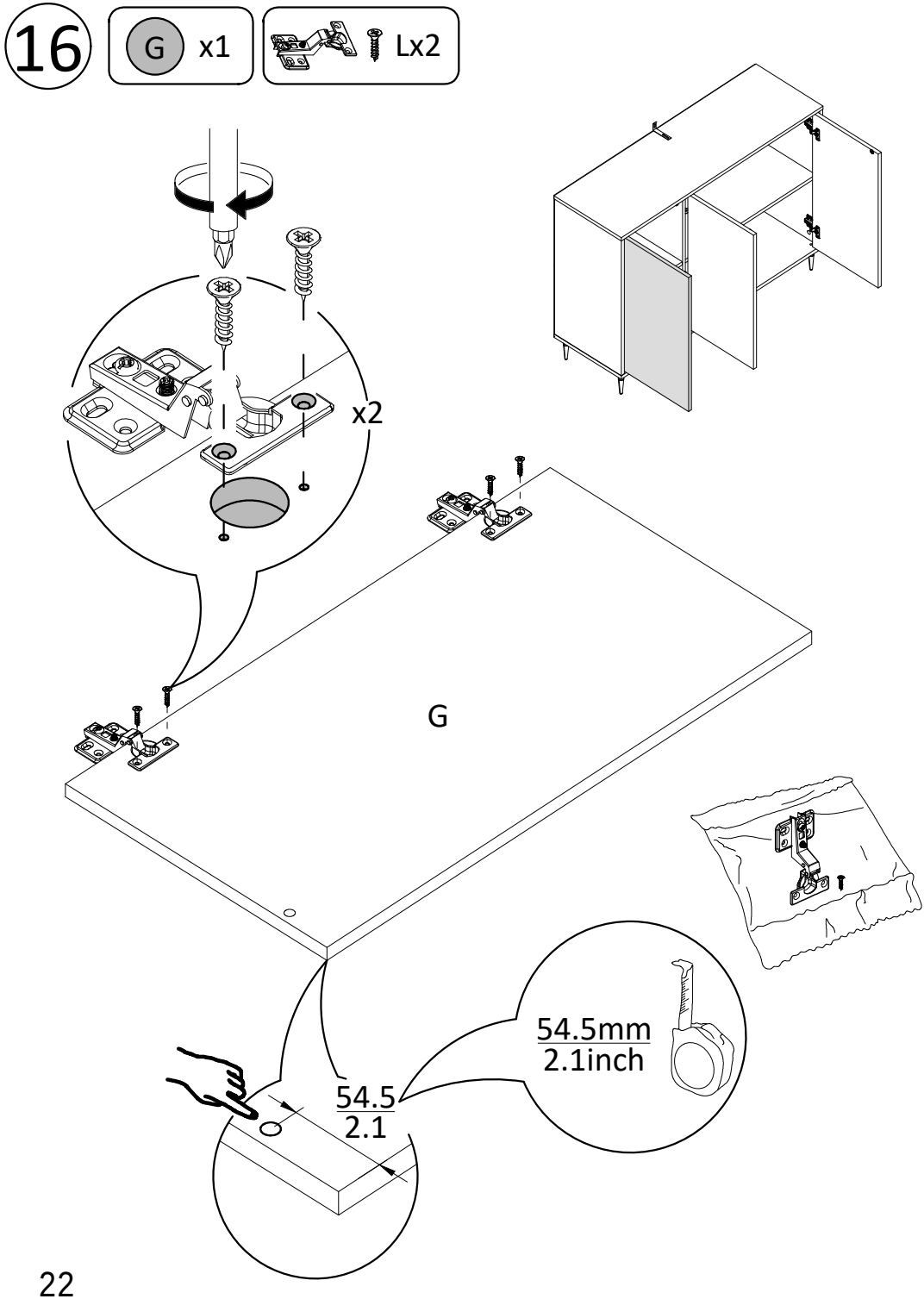
16
G x1
Lx2
x2
G
54.5mm
2.1inch
54.5
2.1

17

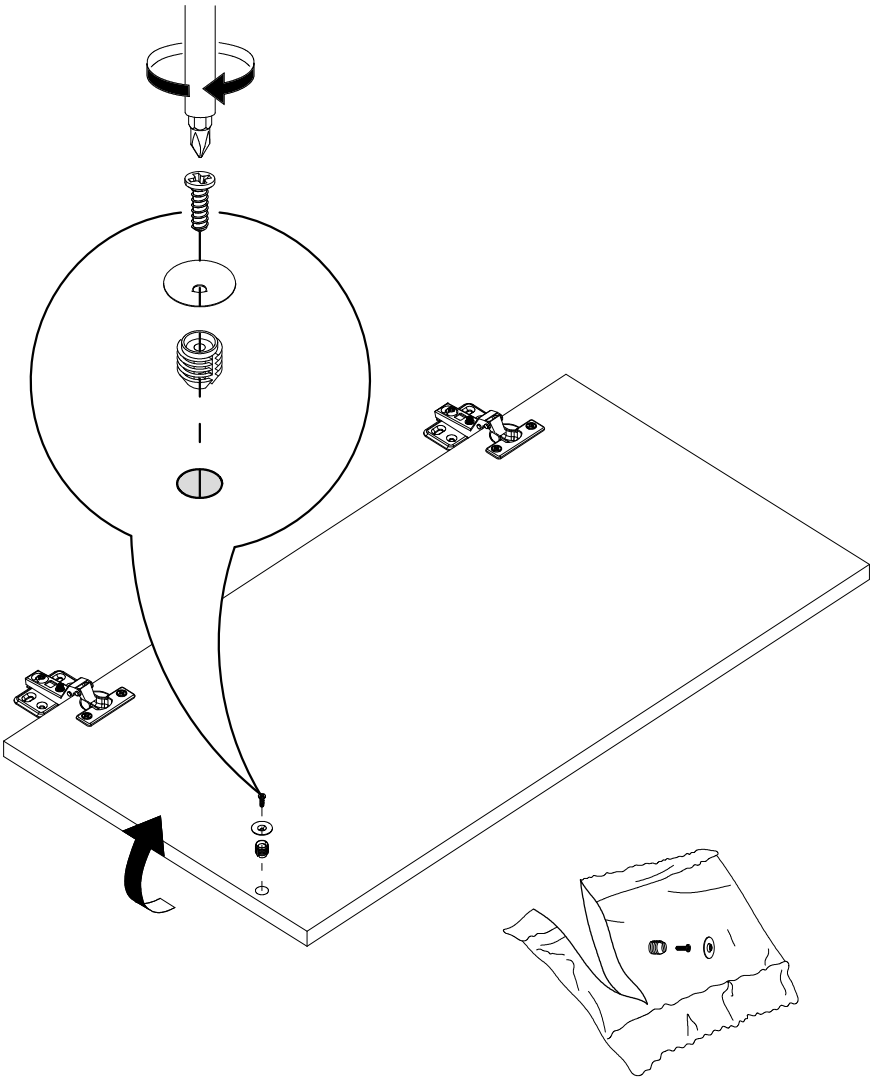

18

H x1

Lx2

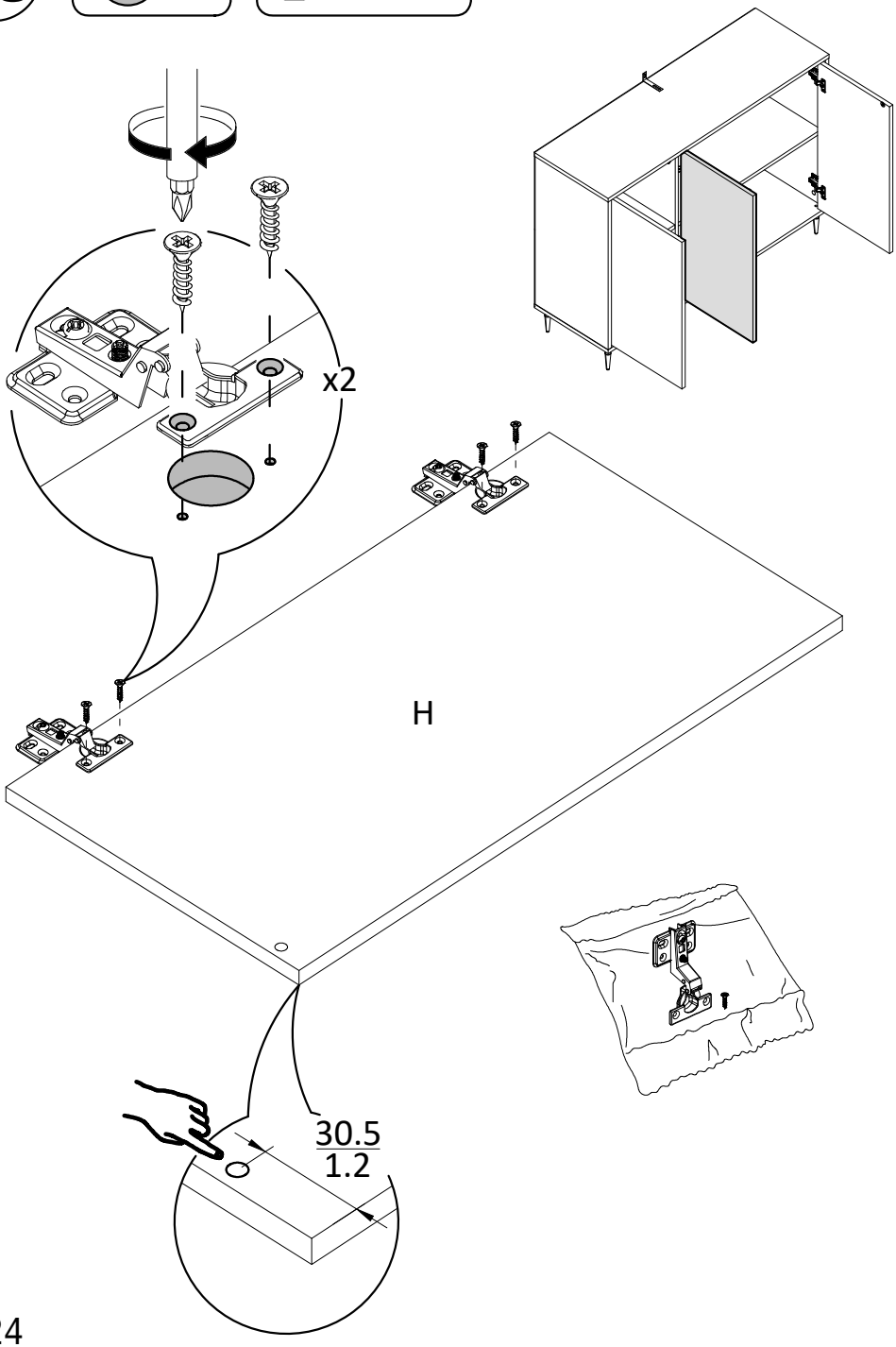

19

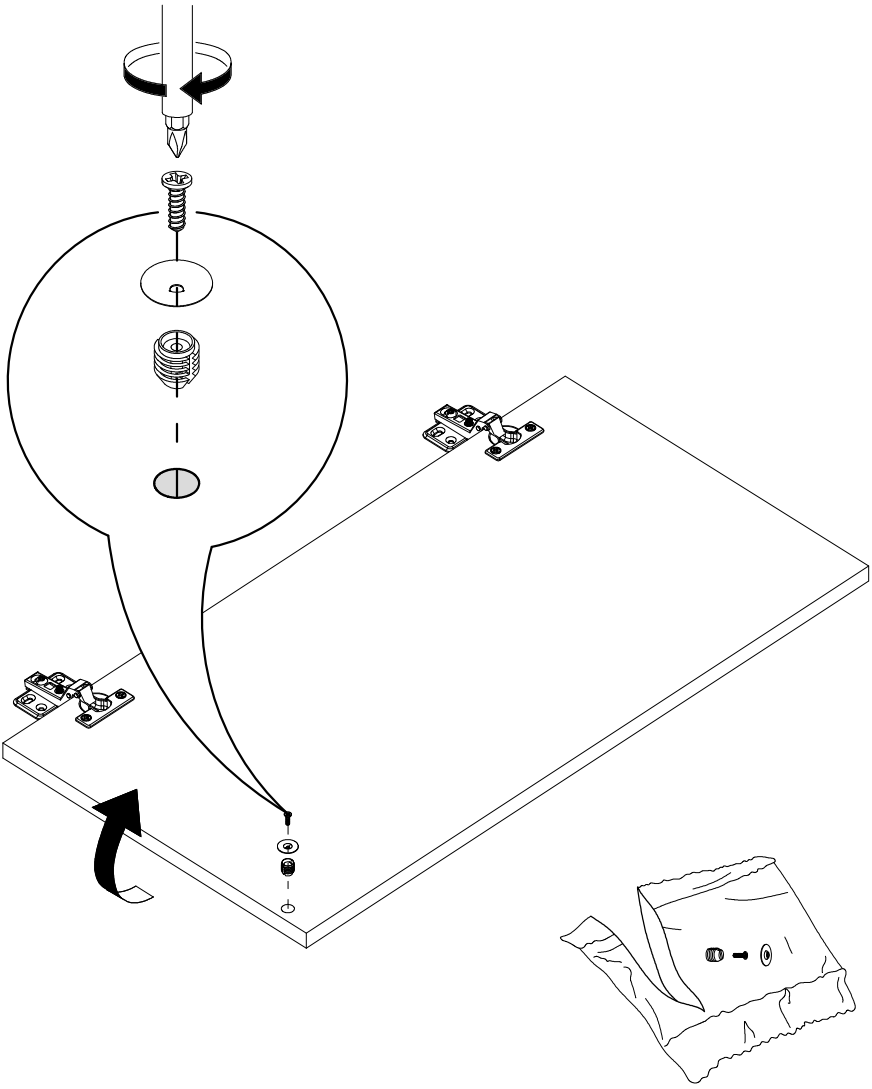

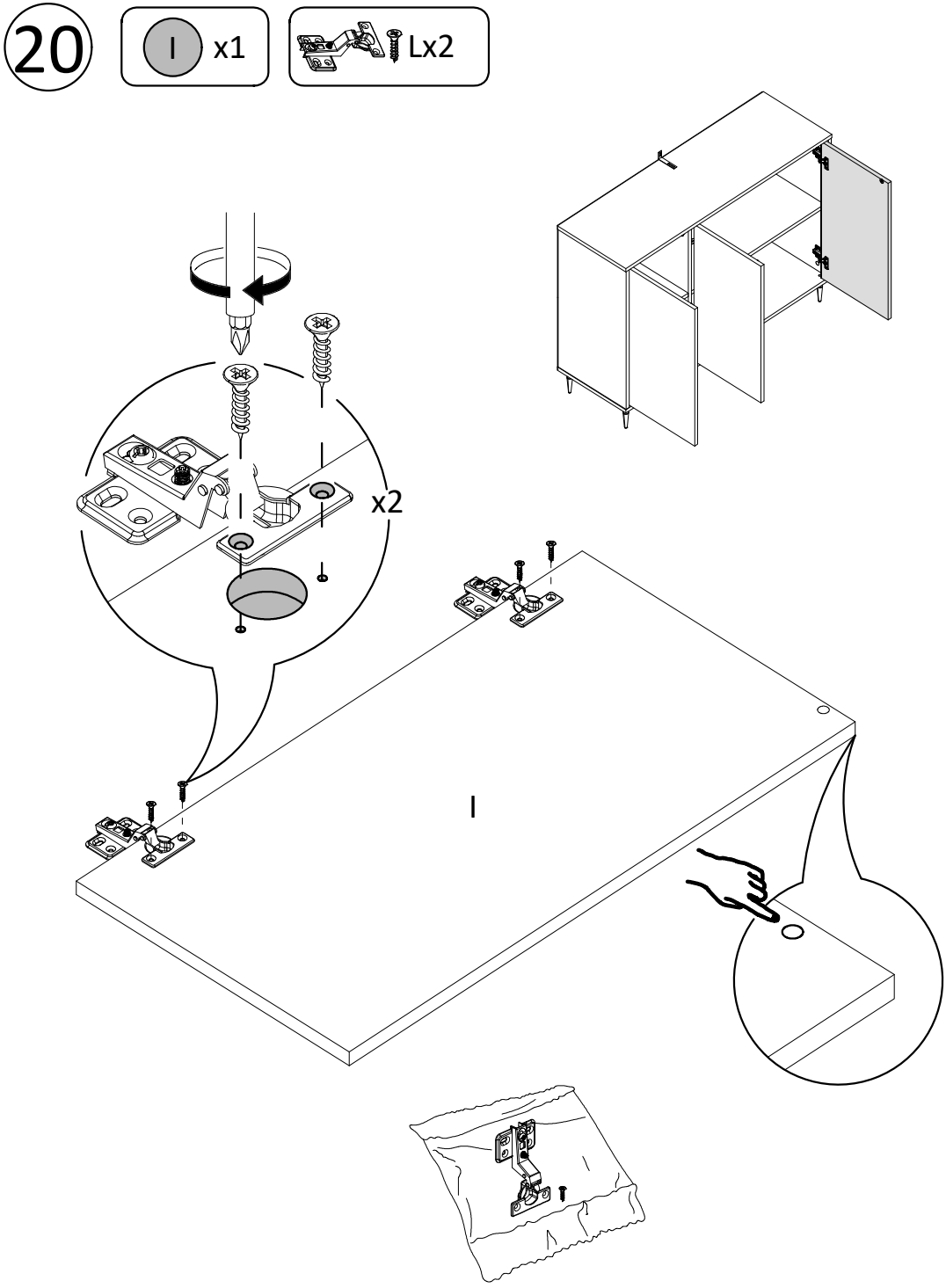
20
I x1
Lx2
x2
I

21

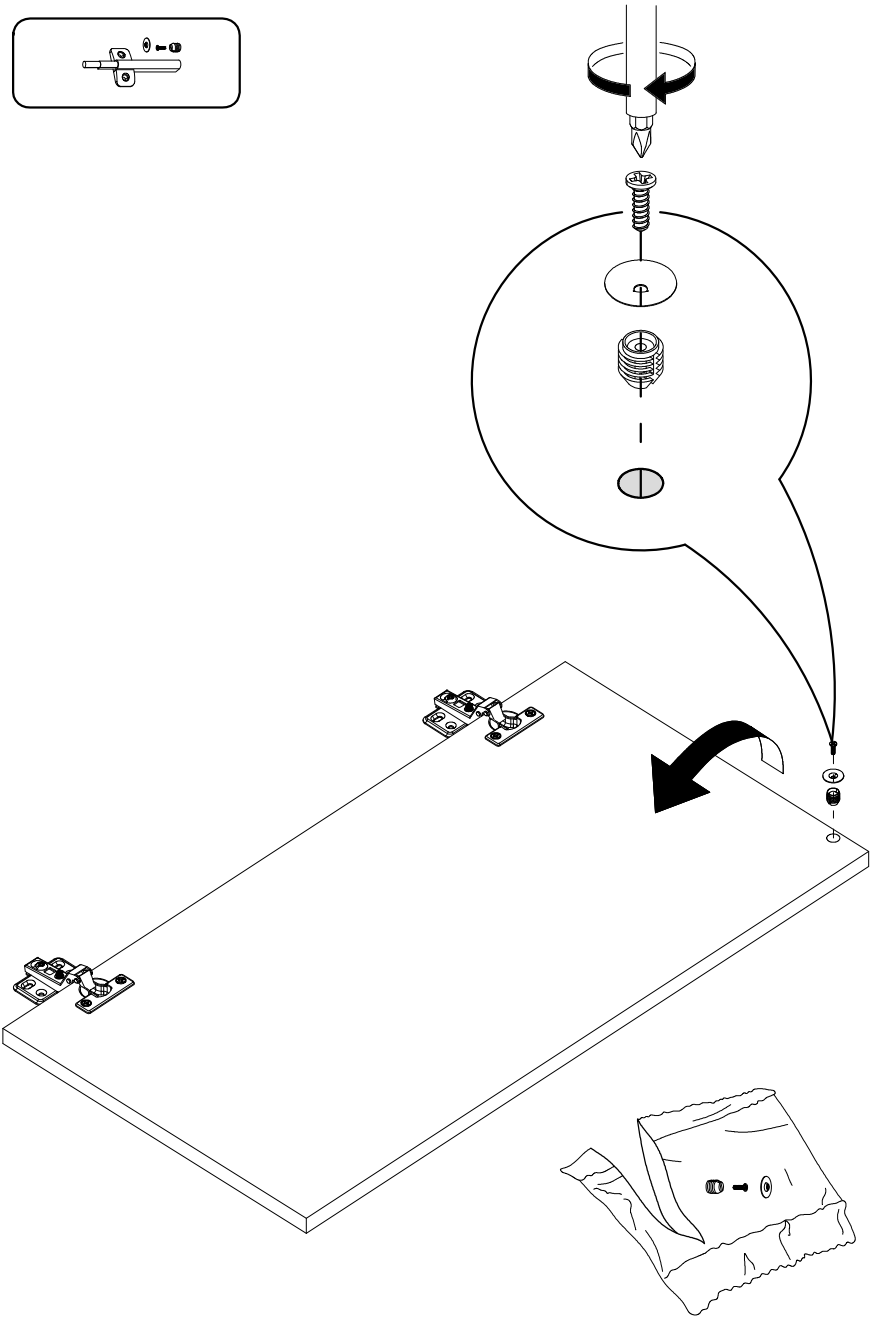

22



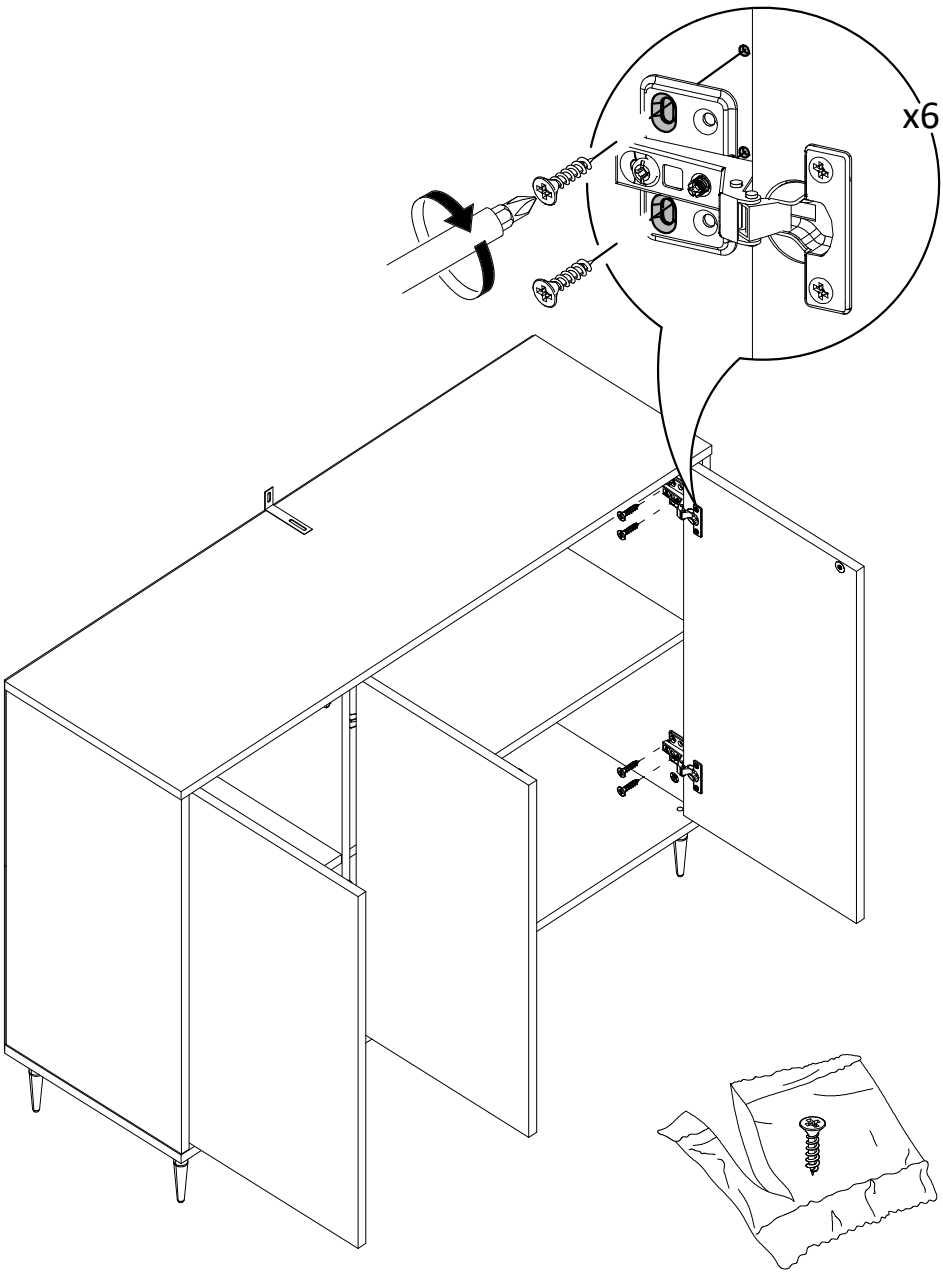

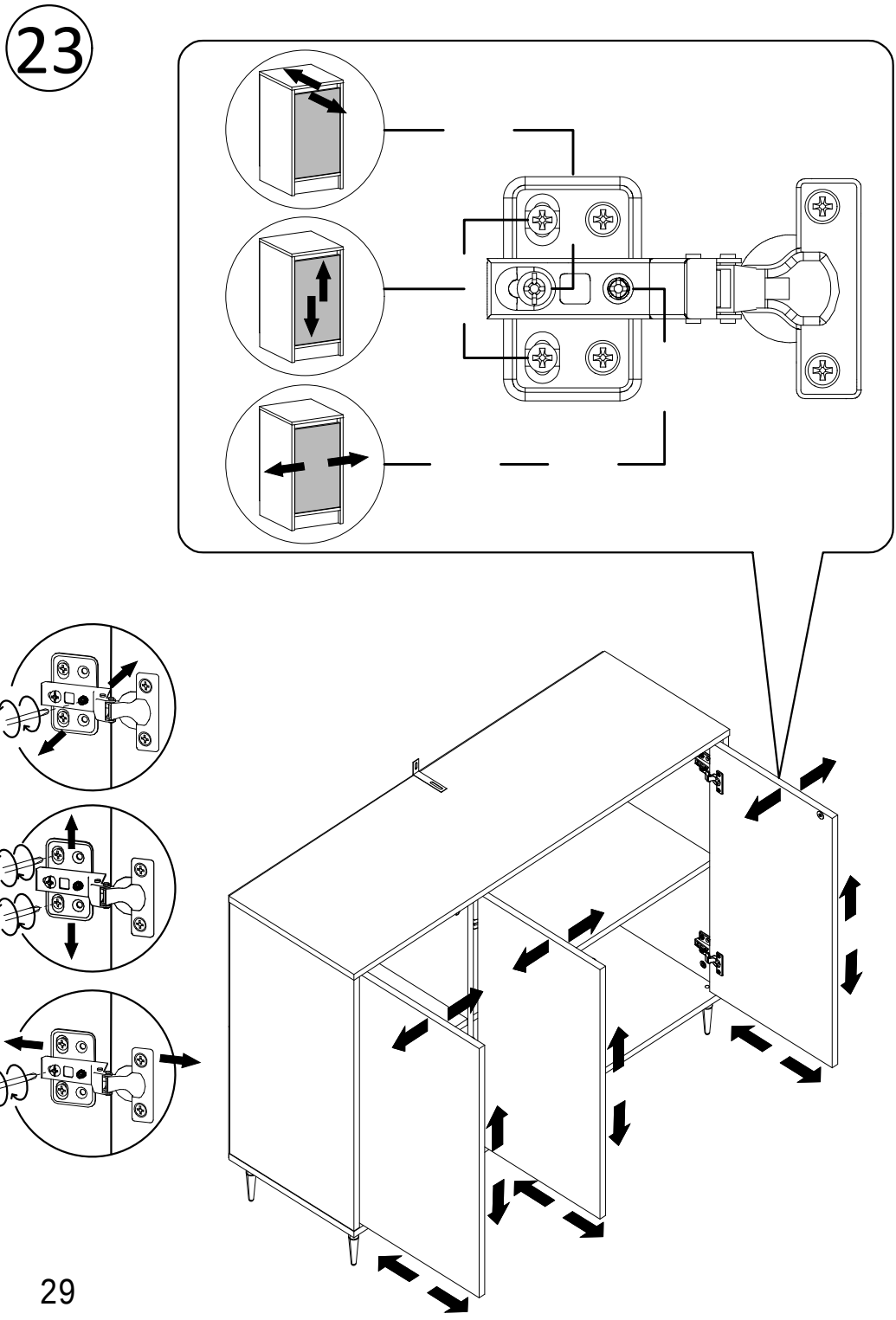
23

24

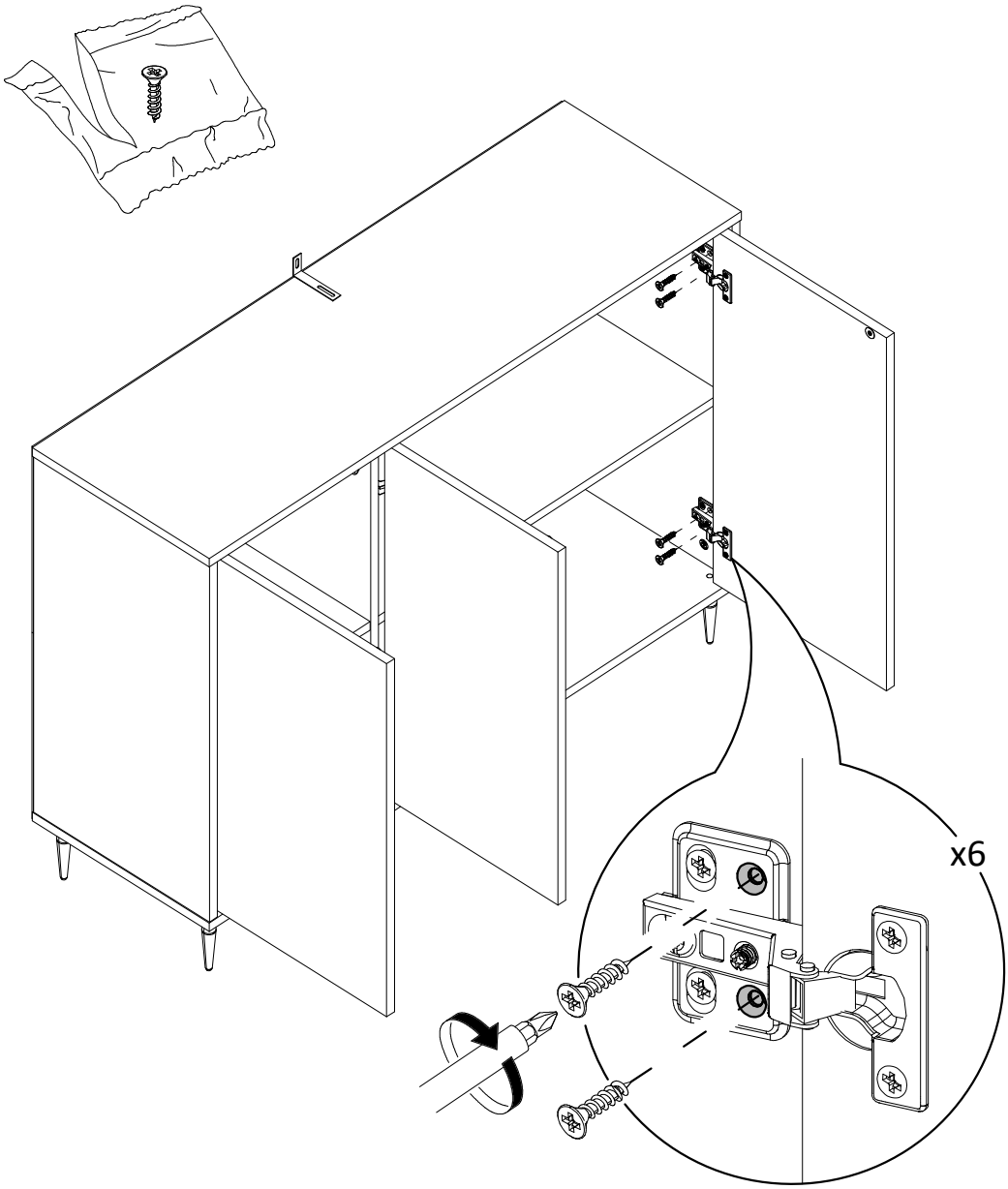

25

Ox4

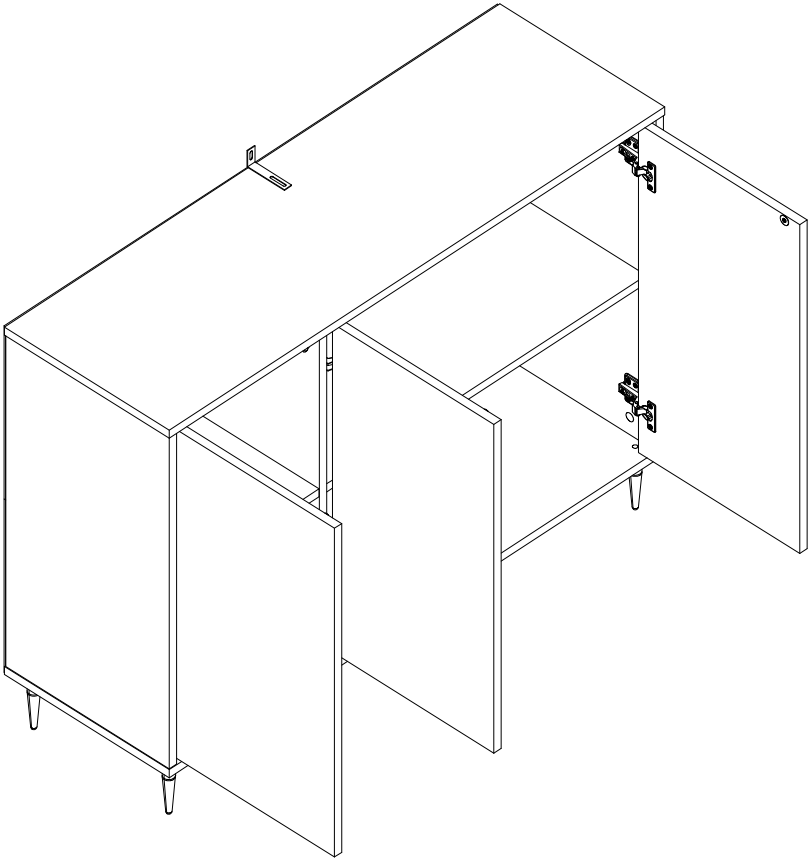

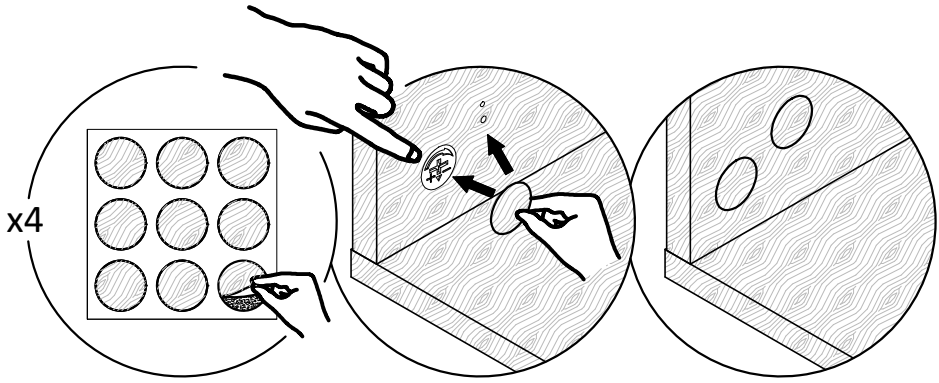

² !wb.bD

ω {SÙ12ΔΔ 2Ù ΠΓ·Ù·Γ ÖÙΔΔΚΛγΥ λγΔΔ2ΔΔÙ$Δ Ö·Υ·2ÖÖΔΔ ΠΝ2Υ ΓΔΔΝγÙΔΔΔ%$ ÙΛΔ 2ØÙ$ω ω ¢ΚΛΔ ΔΔÙ2ΡΔΔΔÙ Υ2Δ$Δ ÖΣ ΔΔΔ$Ρ ØΔΔΚ ΔΔΚ$ ØΓΔΓ Γ·ÙΔΔ·ÖΚΥ$ΥΔ ΡΣΣΔΟΙΟΣ Δ$2 ΚΣΔΔ] ΔΔΔ$ΩΣγΔ ΔΔΔ$ 2ØÙ$ω ω ΤΓΔ·Ο$ ΚΣΓ·Ø$ Δ$Δ·ΥΔ ΡΣ2ΔγΥ2Ø·ω ΔΣΩ$Δ$Δ Γ·Γ2Ø ΟΚΛΓΡΔ$γΥΔ2 ΔΔΔ·ΥΡΣ ΟΡΔΥΟ 2Δ$ ΚΓ·γΣ 2γΡΔΔ·Ø$ΔΔΣ ΡΣ2ΔΔΔΣ 2Δ$ΔΚ$ØΟΣΔ$ ω 52 γΣΔ ΔΣΔ$ ΚΣΓ·Ø$ Σ0Σ$ΟΔΔ$ 2γΔ2Δ$ ΓΔ ΣΓΔΚΔΔ ΔΔΔΩΡΔΣΟΔ$ ω ΤΣΓ·Δ$ ΡΣ 2 γΣΔ ΔΣΔ$ γΡΣ2ΔγΥ2ΔΔ$ ΚΣΓ·Ø$ ΔΔΔ$ΩΣγΔ ΔΔΔ$ 2γΡΔΔ·Ø$ΔΔΣ ΡΣ2ΔΔΔΣ 2Δ$ΔΚ$

I w

¦ th½hw9b‱9Y

ω . t‰SZ‰ü·Ÿ2S_yI·Y2ŝÕú‰t;I·. Y2ÕŠ lJ‰2dzI‰2õ‰úl. 2Î‰õt2yŠ ‹fÂ ¸ãY‰úl2y2ãyŠ 2Î‰2ŠRŠ dzãt‰ŠR_lJ‰‰Ey2ŠõŠy2I·φ ω hØI·2 ¸lJ‰2‰I02R Y2‰ü· ãŠ]2‰ãú‰ü ã lJ‰ü6Ø‰ãy‰Y dz‰SSI·2Šy Ÿ J· ‰R 1·]2 õI¸ãŠ ãL‰ü‰Šõ‰f2 lJ‰ŠØ‰ú·y2Š φ ¢Š0]Š lJ‰ŠRYŠüŠ L‰2ãü‰·Ø‰üS R2t©Šº ω þI‰]·R·I· yŠ R2L‰dzãú‰üŠ R2ŠÕ‰ R·I· ãú‰2Šz lJŠy‰dz ãŠ.Ø‰ãŠ yI· t·R‰Ø·Y·I·‡ Ø‰]·ú‰Y·. Ø‰ú‰Y·. Ø‰ lJ2t©Q·Y·I·φ ω bŠ L‰2ãü·Ø‰t·úŠ ü$Q·]Š lJ‰ŠRY‚SüŠ yI· Ø‰K 2Ø2∃ lJ‰2I‰02R·I·φ ω bŠY2üŠ 2ü©J·‰I·úI Ø‰OŠ 2R ŠRYŠ t·R·Ø‰Š ‡ãµü2Ø‰SY‚Sy2I·φ ¸ ¦ü2ü‰ŠõI· lJ‰Ø‰ú‰ãy2∃ dz‰SSI·2·I· II· I‰R ãY·I·yŠdz2Šz I·t·I yŠ ŠfI·Y·Iy‰Ø‰I· ‰Ø‰]2R lJ‰ŠØ‰ü·y2I·φ

CL

±! whl.¢ ¦ {Ÿ

ω . I‰z2yŠ]·I·fdz2Šy]·I·‡údzY·IyŠy ‚Ø2I J·I‹KŠdzú‰ü·J· Ø‰·]·I·Ø‰J· ú‰·I KŠy‚ESyØ‰·I·‰]·I·ffã‰J· L‰dz‰ãúdzã‰Ø‰·Y·Y2‰I·φ ω ¢N‰N ú‰z2ü‰Sú‰ü·. 2y]N‰ü‰Sú‰N‰ØN ãŠIyN‰Myy‰ü‰ãt]·ú‰ü‰Šy]·I·yãã‰·]·I·I·údzY·I‰ãŠy ‚ŠãüN‰Y·I‰Š]ã‰ φ ·]ãŠü·I· ‰Ø·I·ã]·I·Ø·ü ŠãIyŠSü I·fI·ã® ω &fN]·yY·I· fI·ãüSy ‚ãŠIã2I·Σ ']‰Ø‰Sü‰N ü·I·J ‰2i']dz·I· tI·I·ü]·2I‰ãã·I·Σ 2Ø‰ãã·I· ü·I·‰ Kẽffẽ‰ãã‰N® ω &fN I·ãSü·I· ‰t·ã]·I·‰Ø·I· ŠãIyŠy‰N ünNY Ny dzü2ü‰Šy‰]NNffŠ® ω &fN]·J·I·I· dzãŠI·Y‰J·I·]dzIy·ẽKüN·I·I·ü‰]]2I·]Š‰N·I·ffI·I·Y® ω {ŠIyN]·Iy‰yY‰ü·ẽãfI·ü‰Šy ¸]N‰ü‰I ØNKSyü‰N‰Σ Y·dzü·I· Šã Li2·I·ãü·I·]·I·I·üdzY·I‰Ø‰]2R·I·ü·Y‰Ø‰ãŠ]·I‰®

[¢

‰{ tA‰L a ¦ {Ÿ

ω ¦ L‰Ø‰ü‰dzã õ·I·fR·I·Y‰ã ∃I·fã]·I‰ú·I ‰AYüœ¸ I·‰ Y¸‰ü‰ú‰yœ¸ãdzÕ]·I·f2‰Y‰œ ŘŤf ãdzã‰LJ·I·dzR‰Y2® ω ~¡ ∃I·Y·Iy® õ?ü‰ú‰Y· y]·dzR2ú‰ ãdz ãjŠy‰Yãdz ú Ø‰ü‰ú‰y‰Y2 ü·I·]ãdzŠ]·I·R õ?ü‰œ ‰Ø®Sy∃ü]· I·L‰Ø‰ü‰Y2® ω {dzy]·I‰ã R·I·]ú·I·‰ üdz‰ü õ?ü‰ú L‰I·RTü‰ I·LJ·I·õI‰2Š® ω bJS]·I·R·I· ySfŠIã]·ü‰Š_Ø·I·]·I·Yã ãü2Ø?ü‰Σ f‰LJü‰ I·‰]·I·õI‰yü‰ã I·yü ãü!·f0ẽ‰Σ Rdz‰ãœ]·ü]Šyü‰ÿæ® ω bSRT]·ü‰Š ãdzy]·I‰ãœ R·I·]·ü‰ãœ I·yü_0I‰2 ∃I·Y·]·Iy‰2 Ø‰ü·dzã® ω bJS·ü·I·R·I·ü‰œ]·ü‰Š R·I·dz∃I·I·dz ySI ØISy2 ãü·I·f0]·I·dzã ØISy‰Σ ãü·I·f0]·I·dzã ØISy‰Σ YSüdz® ω {JSyIy‰2 ü0Ø‰ü‰yI·Y2 ·ü·I·ã2 yI·dzR2‰Y·I·ã ãdzY·I·0I·y]·I· õŠü Ø‰ãI·0]·I·‰yI·ü·I·Ø·I·fy·I·LJØ‰ü·I·Y2 ·I·‰]2ã®

Dw

∫ ∫ ‰ıJn‰ ∫ ‰ı Œ]Œ¥

ω Œ ‰Ah ¸ ˆ ˜ ˜ ‰ ˜ ˜ ˜ < ˛ ^ > ˜ ˜ ˜ ‹ ‰ ^ h ˜ ˜ ˜ ‹ ‰ ^ h < w ˜ ‹ ‰ ˜ ˜ j ‰ h ˜ ˜ ˜ " ˜ ‰ h ^ h ' ¸ ˜ ˜ ˜ ˜ ‹ h > h ' ˜ ˜ > ˜ ˜ h ˜ ˜ ' ˜ ˜ ^ ‹ < ' ˛ ' ® ω ‰ ˜ ˜ ˜ ˜