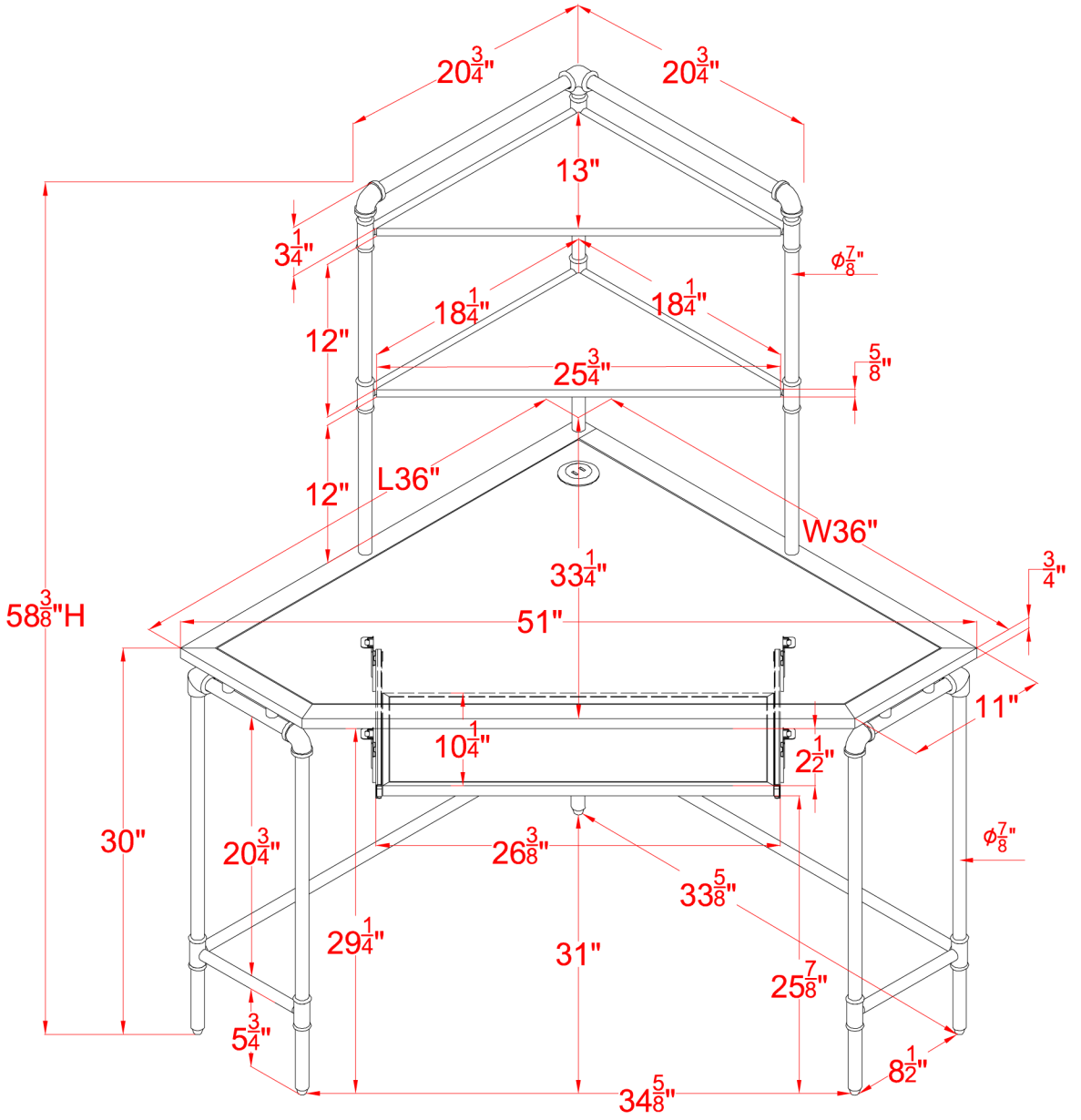
20 3/4"
20 3/4"
13"
3 1/4"
ϕ7/8"
18 1/4"
18 1/4"
12"
25 3/4"
5/8"
12"
L36"
W36"
33 1/4"
3/4"
58 3/8"H
51"
11"
10 1/4"
2 1/2"
30"
20 3/4"
26 3/8"
ϕ7/8"
33 5/8"
29 1/4"
31"
25 7/8"
5 3/4"
8 1/2"
34 5/8"