INSTRUCTIONS

Upholstered Bed

N652P395232

N652P395233

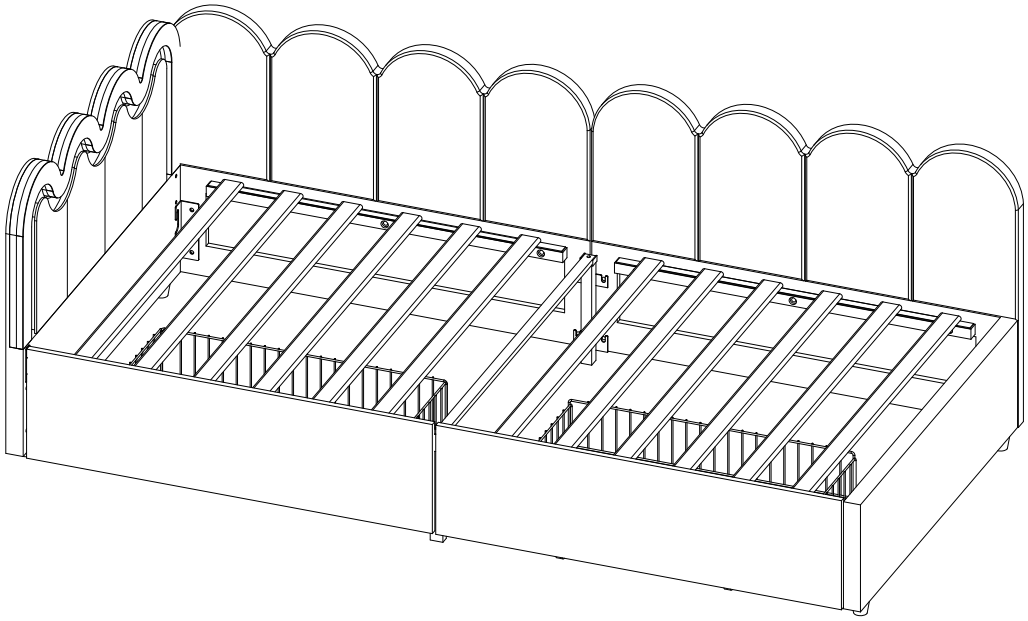

TIPS

1.This product is divided into 2 parcels for delivery. They may not arrive at the sametime.Please wait patiently.

2.Please read the instructions fully before assembly. These instructions include important information which could ensure correct assembly. We have been working on providing high quality products for you. However, in the rare instance that your product is defective,missing parts or there are some issues, please don' hesitate to contact our customer service to submit parts requirements, assembly suggestion,or warranty claims, and we will give the best solution as soon as possible. If necessary, we need you to provide some more clear pictures of the issue.

3.Insert the screws in holes and tighten the screws, but not too tight,70%~80% is ok ,finally tighten all the screws. If some issues happened that some screws can not
target to the hole or some parts are difficult to install, please adjust the tightness of the screws.

4.2 people are recommended to finish.

English

IMPORTANT ! KEEP FOR FUTURE REFERENCE : READ CAREFULLY

- To be assembled by an adult. Assembly must be checked by an adult before use
- WARNING ! Keep all screws, small parts and plastic bags out of the reach of children
- Properly identify all parts before assembling
- Never use your item if any of its parts are broken or missing
- Should any problems arise, please contact our After Sales Service
- Manufacturer's instructions shall be followed at all times
- Care: Clean with a soft, dry cloth. In case of larger stains, carefully rub with a slightly damp, non-abrasive sponge
- Avoid the risk of fire by not placing furniture near sources of ignition or hot items
- Do not jump on the bed

Deutsch

WICHTIG ! ZUM SPÄTEREN NACHSCHLAGEN AUFBEWAHREN: SORGFÄLTIG LESEN

- Muss von einem Erwachsenen zusammengebaut werden.Der Zusammenbau muss vor dem Gebrauch von einem Erwachsenen überprüft werden
- WARNUNG! Bewahren Sie alle Schrauben, Kleinteile und Plastikbeutel außerhalb der Reichweite von Kindern auf
- Kennzeichnen Sie vor dem Zusammenbau alle Teile richtig
- Benutzen Sie Ihren Artikel niemals, wenn Teile gebrochen sind oder fehlen
- Sollten Probleme auftreten, wenden Sie sich bitte an unseren Kundendienst
- Die Anweisungen des Herstellers sind stets zu befolgen
- Pflege: Mit einem weichen, trockenen Tuch reinigen. Bei größeren Flecken vorsichtig mit einem leicht feuchten, nicht scheuernden Schwamm abreiben. nicht scheuernden Schwamm
- Vermeiden Sie die Gefahr eines Brandes, indem Sie die Möbel nicht in der Nähe von Zündquellen oder heißen Gegenständen aufstellen
- Nicht auf das Bett springen

Français

IMPORTANT ! CONSERVER POUR RÉFÉRENCE ULTÉRIEURE : LIRE ATTENTIVEMENT

- Le montage doit être effectué par un adulte. Le montage doit être vérifié par un adulte avant Utilisation
- ATTENTION ! Tenir les vis, les petites pièces et les sachets en plastique hors de portée des enfants
- Identifiez correctement toutes les pièces avant de les assembler
- N'utilisez jamais votre article si l'une de ses pièces est cassée ou manquante
- En cas de problème, veuillez contacter notre service après-vente
- Les instructions du fabricant doivent être respectées à tout moment
- Entretien : nettoyer avec un chiffon doux et sec. En cas de taches plus importantes, frotter soigneusement avec une éponge non abrasive légèrement humide. légèrement humide et non Abrasive
- Évitez les risques d'incendie en ne plaçant pas les meubles à proximité de sources d'inflammation ou d'objets chauds
- Ne pas sauter sur le lit

Italiano

IMPORTANTE! CONSERVARE PER RIFERIMENTO FUTURO: LEGGERE ATTENTAMENTE

- Deve essere assemblato da un adulto. L'assemblaggio deve essere controllato da un adulto prima dell'uso
- ATTENZIONE! Tenere tutte le viti, le piccole parti e i sacchetti di plastica fuori dalla portata dei bambini
- Identificare correttamente tutte le parti prima dell'assemblaggio
- Non utilizzare mai l'articolo se alcune parti sono rotte o mancanti
- In caso di problemi, si prega di contattare il nostro Servizio Post Vendita
- Le istruzioni del produttore devono essere sempre seguite
- Cura: Pulire con un panno morbido e asciutto. In caso di macchie più estese, strofinare accuratamente con una spugna leggermente umida e nonspugna leggermente umida e non abrasiva
- Evitare il rischio di incendio, non collocando i mobili vicino a fonti di accensione o a oggetti caldi
- Non saltare sul letto

Español

¡ IMPORTANTE ! CONSÉRVELO PARA FUTURAS CONSULTAS: LEA ATENTAMENTE

- Debe ser montado por un adulto. El montaje debe ser comprobado por un adulto antes del uso

ADVERTENCIA Mantenga todos los tornillos, piezas pequeñas y bolsas de plástico fuera del alcance de los niños.

- Identifique correctamente todas las piezas antes de montarlas
- Nunca utilice su artículo si alguna de sus piezas está rota o falta
- Si surge algún problema, póngase en contacto con nuestro Servicio Postventa
- Las instrucciones del fabricante deben seguirse en todo momento
- Cuidado: Limpiar con un paño suave y seco. En caso de manchas más grandes, frote cuidadosamente con una esponja no abrasiva ligeramente humedecida.
- Evite el riesgo de incendio no colocando los muebles cerca de fuentes de ignición u objetos calientes.
- No saltar sobre la cama.

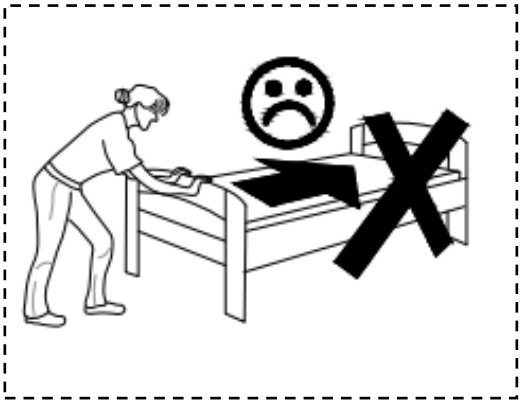

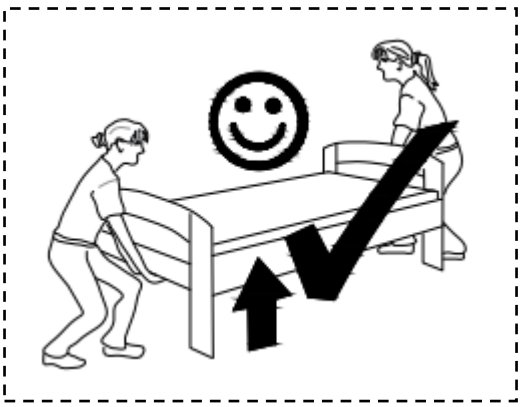



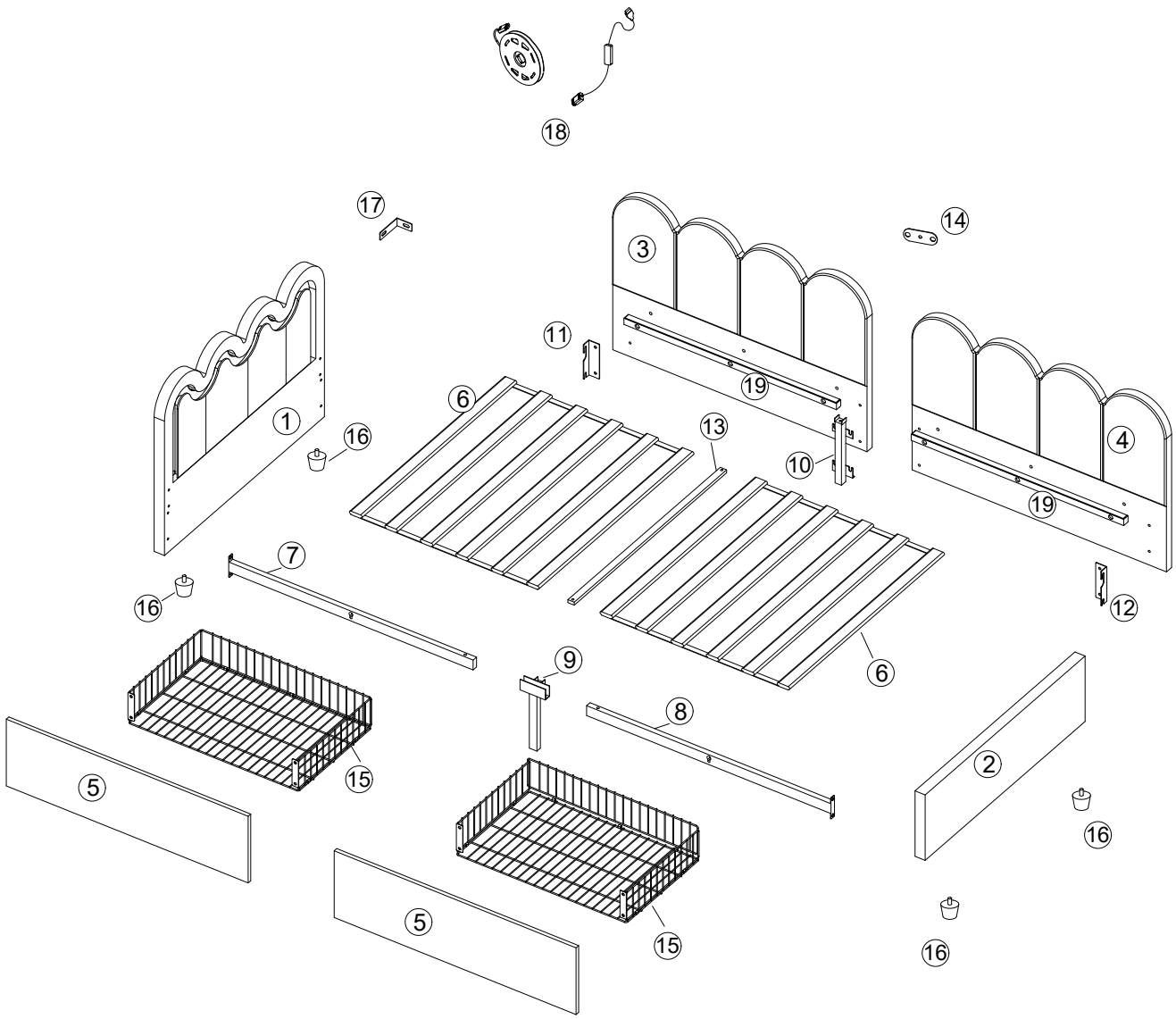
18
17
14
3
11
19
1
16
6
13
10
4
19
7
16
12
6
9
8
2
5
15
16
5
15
16

Parts List A box

N652P395232

1 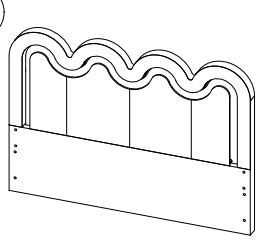 1 PC	3 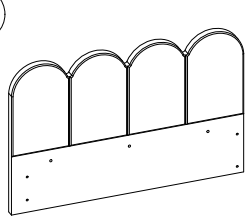 1 PC	4 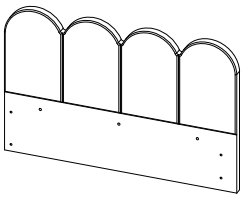 1 PC	

Parts List B box

N652P395233

2 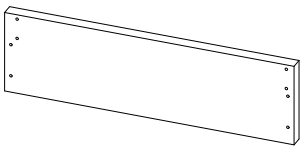 1 PC	5 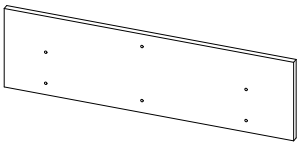 2 PCS	6 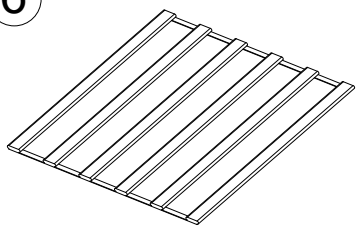 2 PCS	7 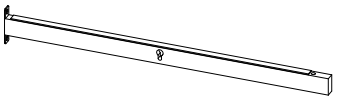 1 PC
8 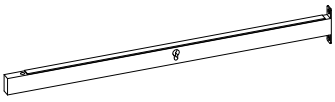 1 PC	9 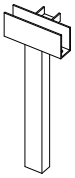 1 PC	10 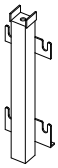 1 PC	11  1 PC
12  1 PC	13 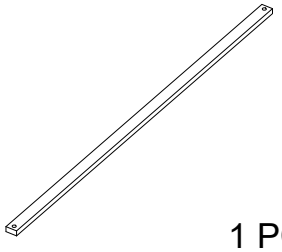 1 PC	14  1 PC	15 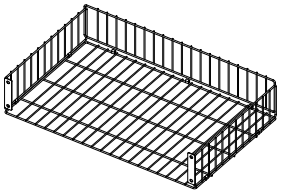 2 PCS
16  4 PCS	17  1 PC	18 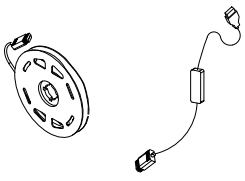 1 PC	19 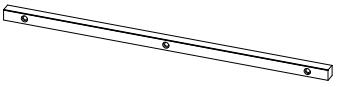 2 PCS

Hardware details B box
N652P395233

A 20 PCS  M8x15mm	B 2 PCS  M8x20mm	C 2 PCS 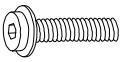 M8x45mm	D 10 PCS  M6x15mm
E 2PCS  M6x15mm	F 2 PCS 	G 8PCS 	H 4 PCS 
I 1PC 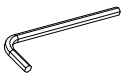 D5	J 1PC 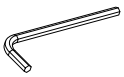 D4	K 6 PCS 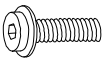 M8x35mm	

1

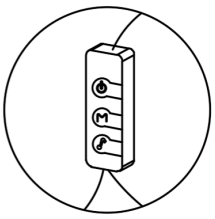

LED lamp button control.

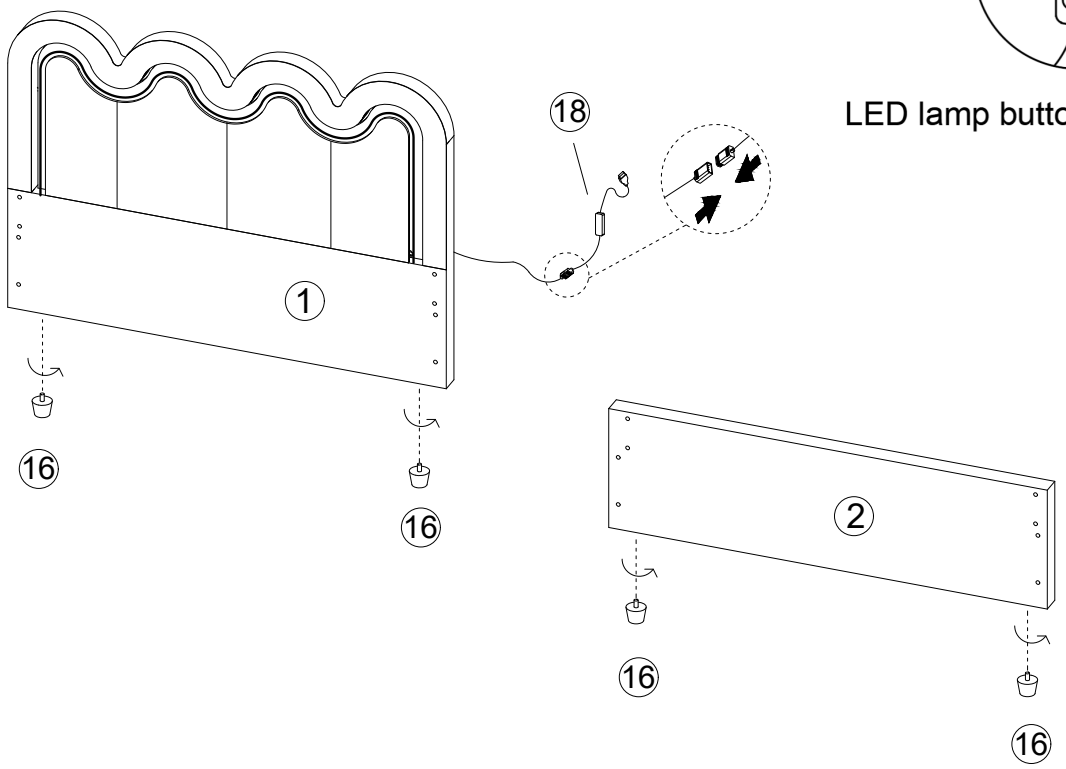

2

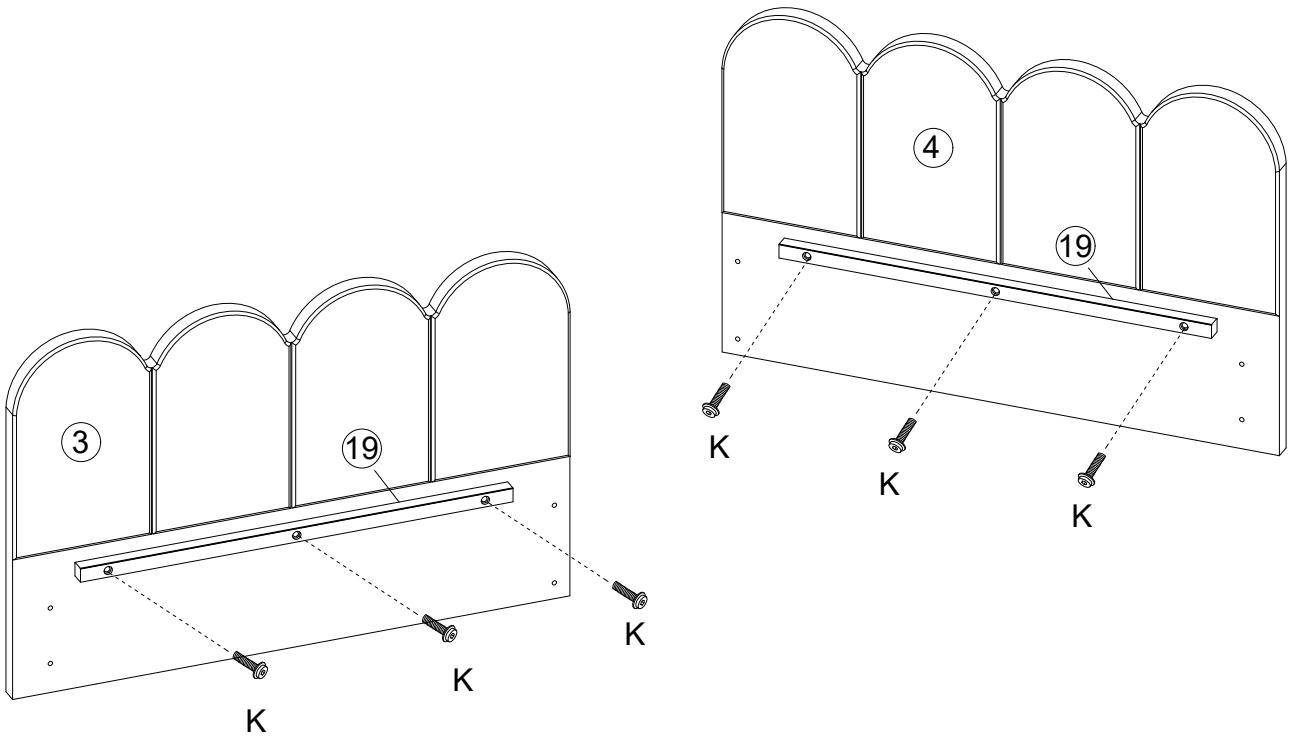



M8x35mm

K x6

3

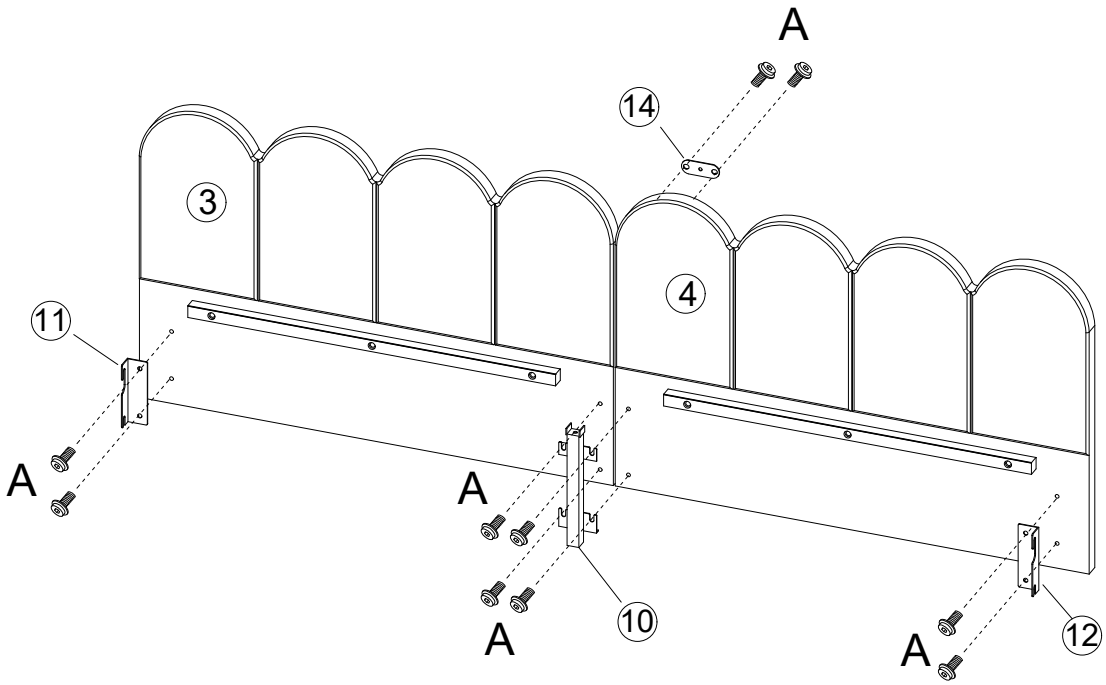

M8x15mm

Ⓐ x 10

4

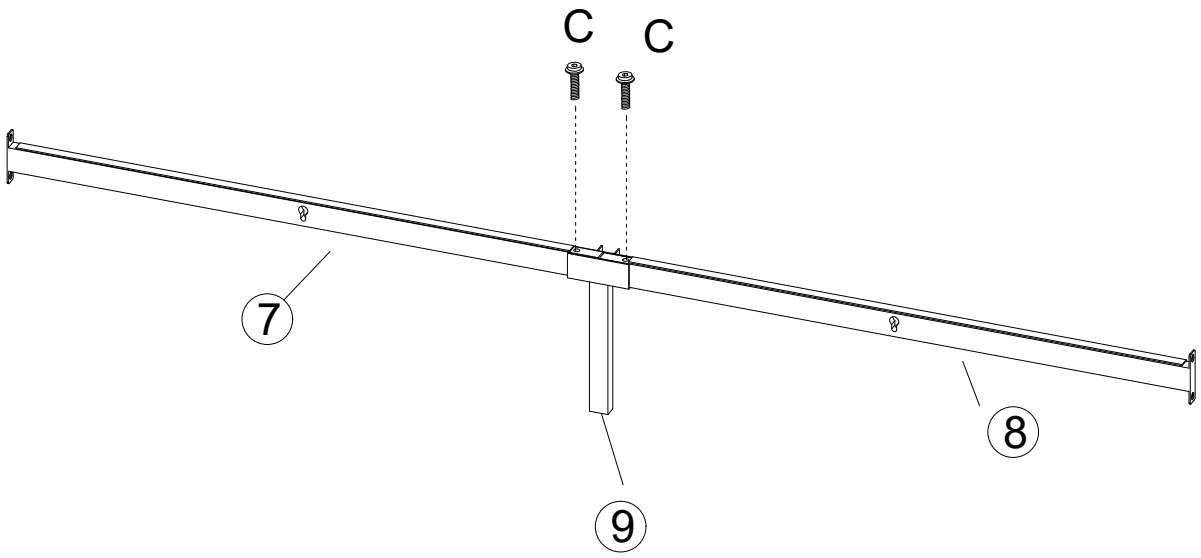

M8x45mm

Ⓒ x 2

5

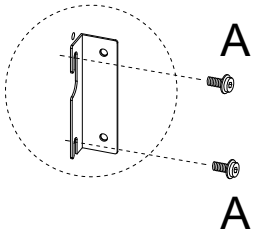

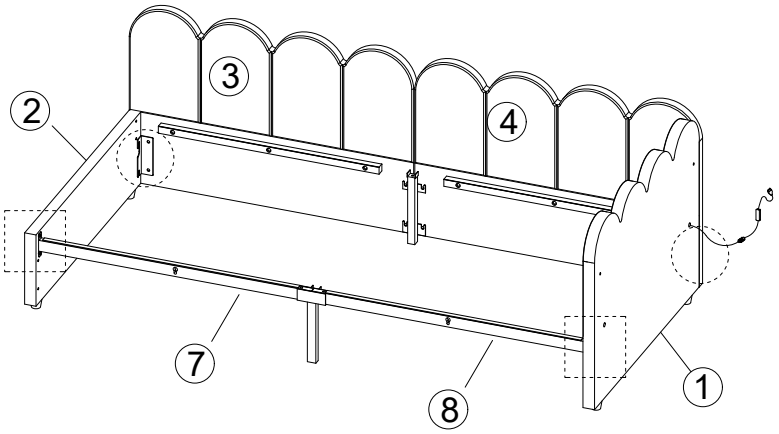

OR

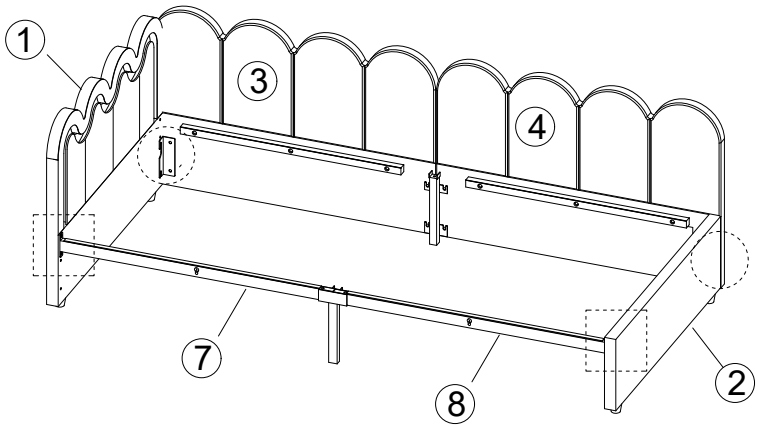

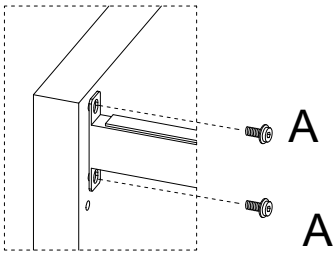

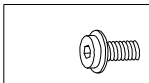

M8x15mm

Ⓐ x 8

6

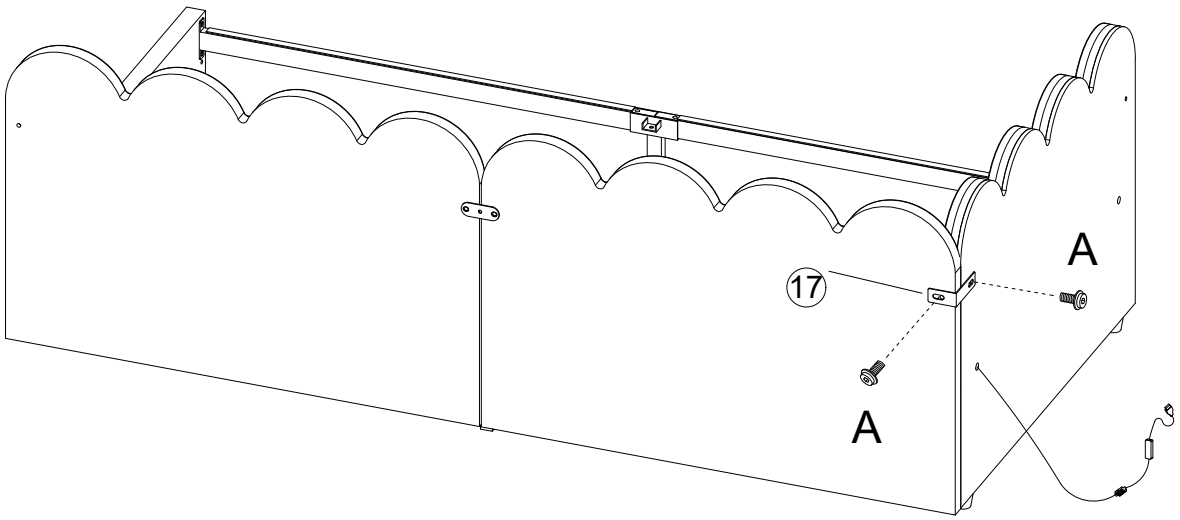



M8x15mm

Ⓐ x 2

7

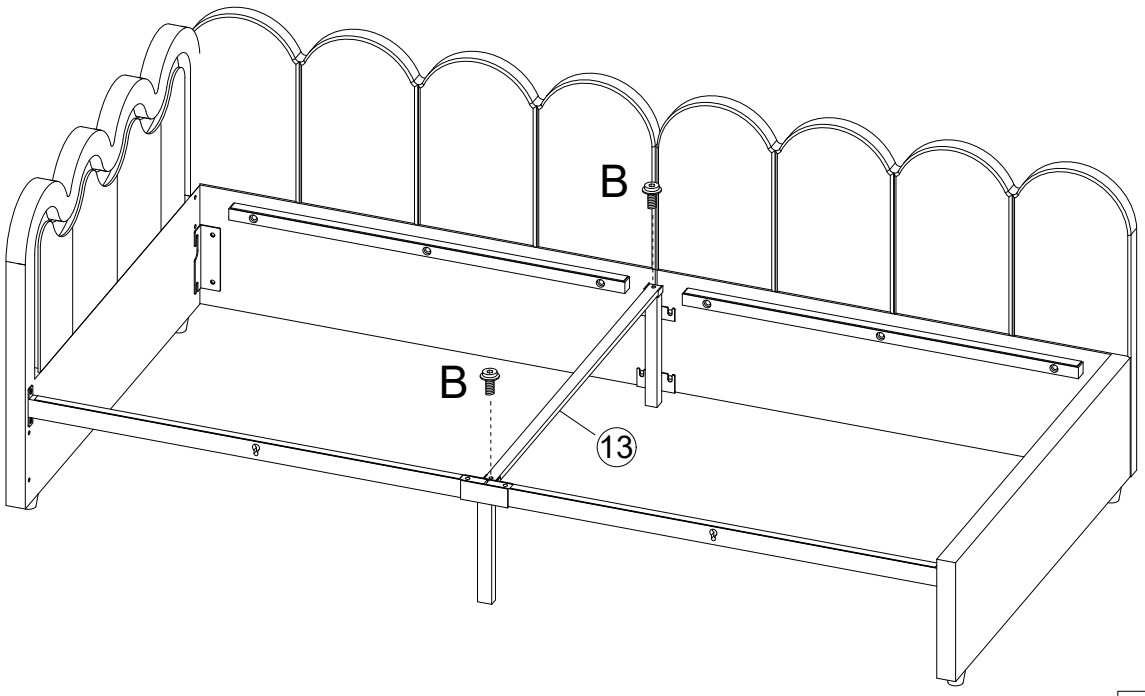



M8x20mm

Ⓑ x 2

8

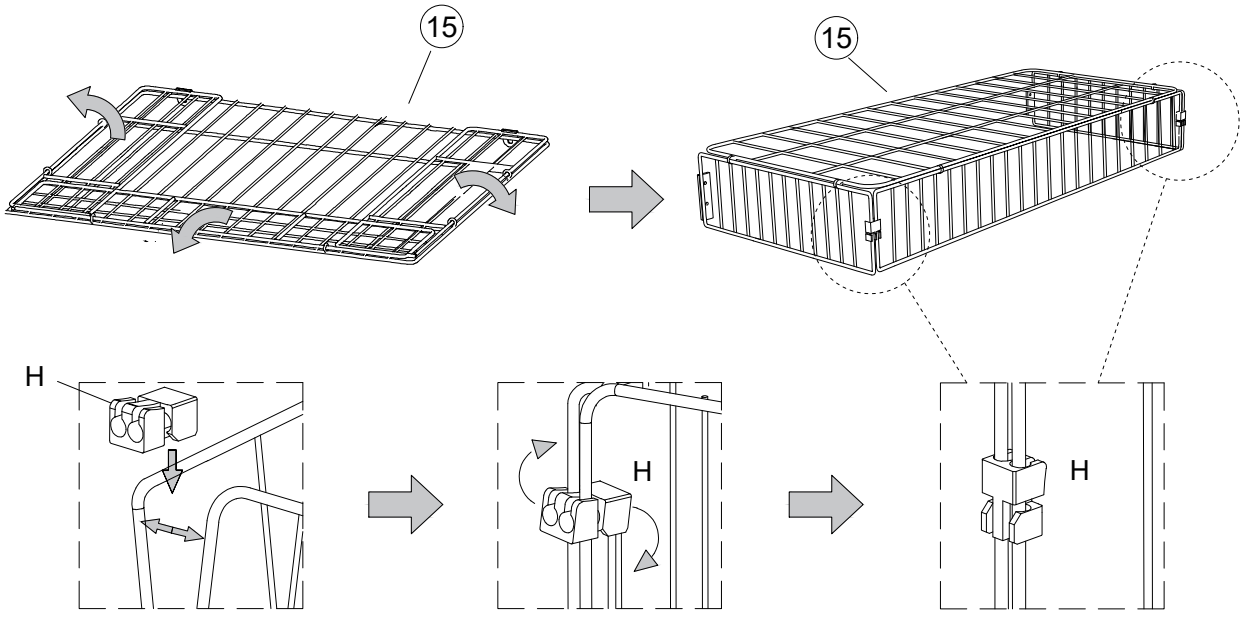

1,Takepart H andinsertit between the left and right steel bars，ensuring a tight fit.

2,Then,rotate part H secure the steel bars in the inner and outer slots,ensuring a tight fit.

3,Finally, adjust the position so that the steel bar and the slot of part F fit.

9

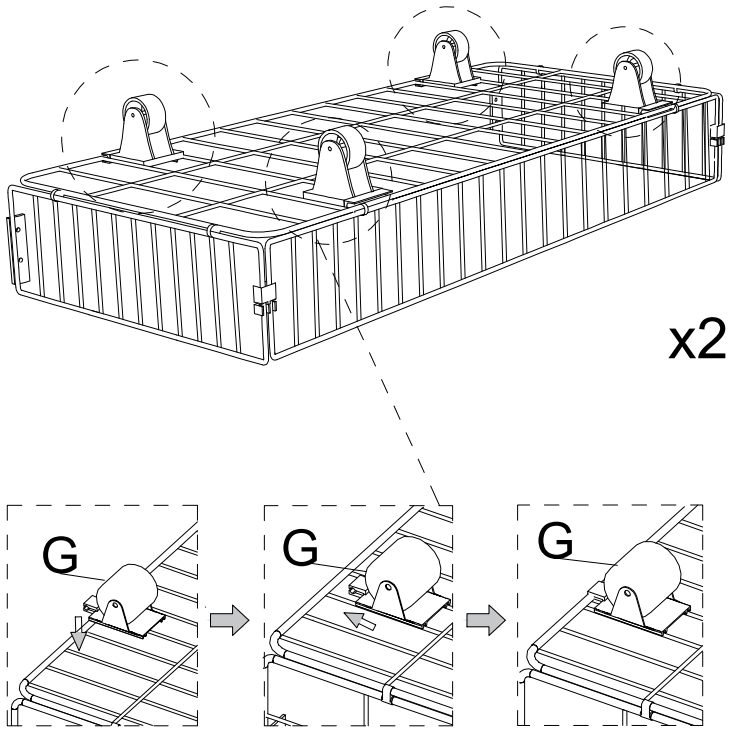

10

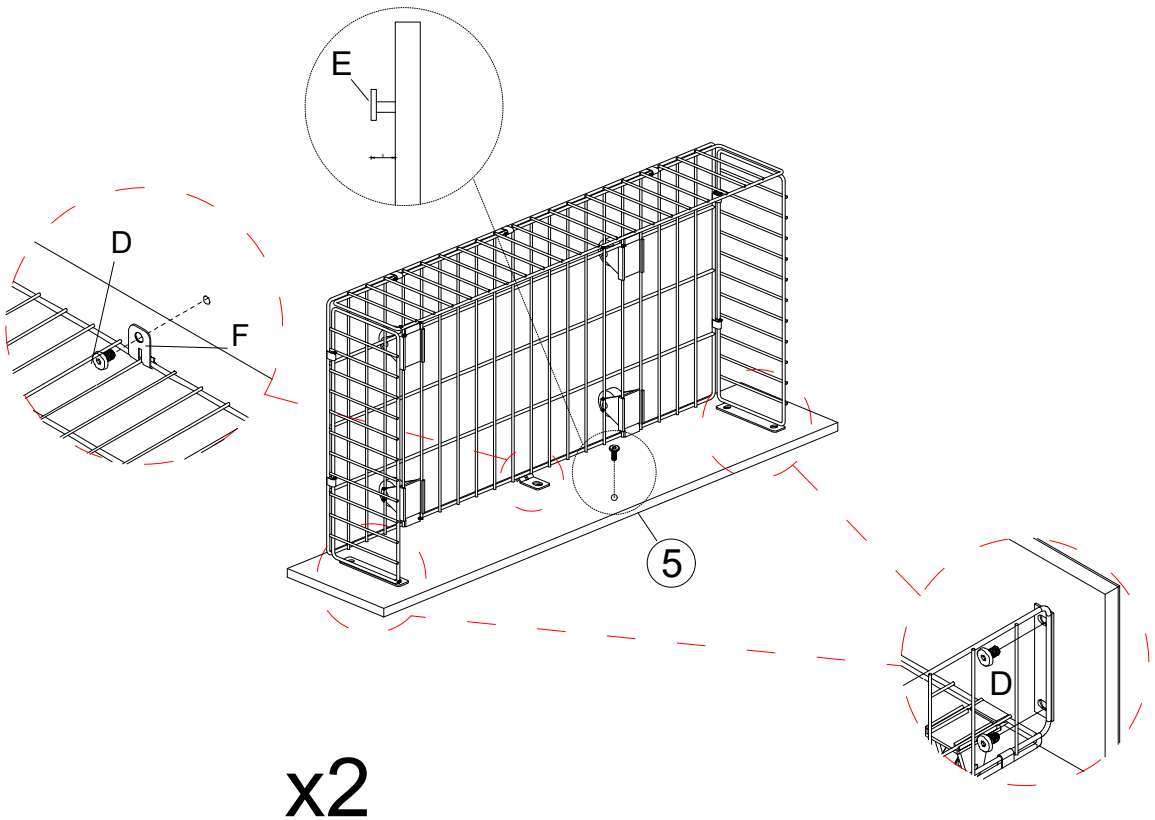

M6x15mm
D x 10

M6x15mm
E x 2

F x 2

11

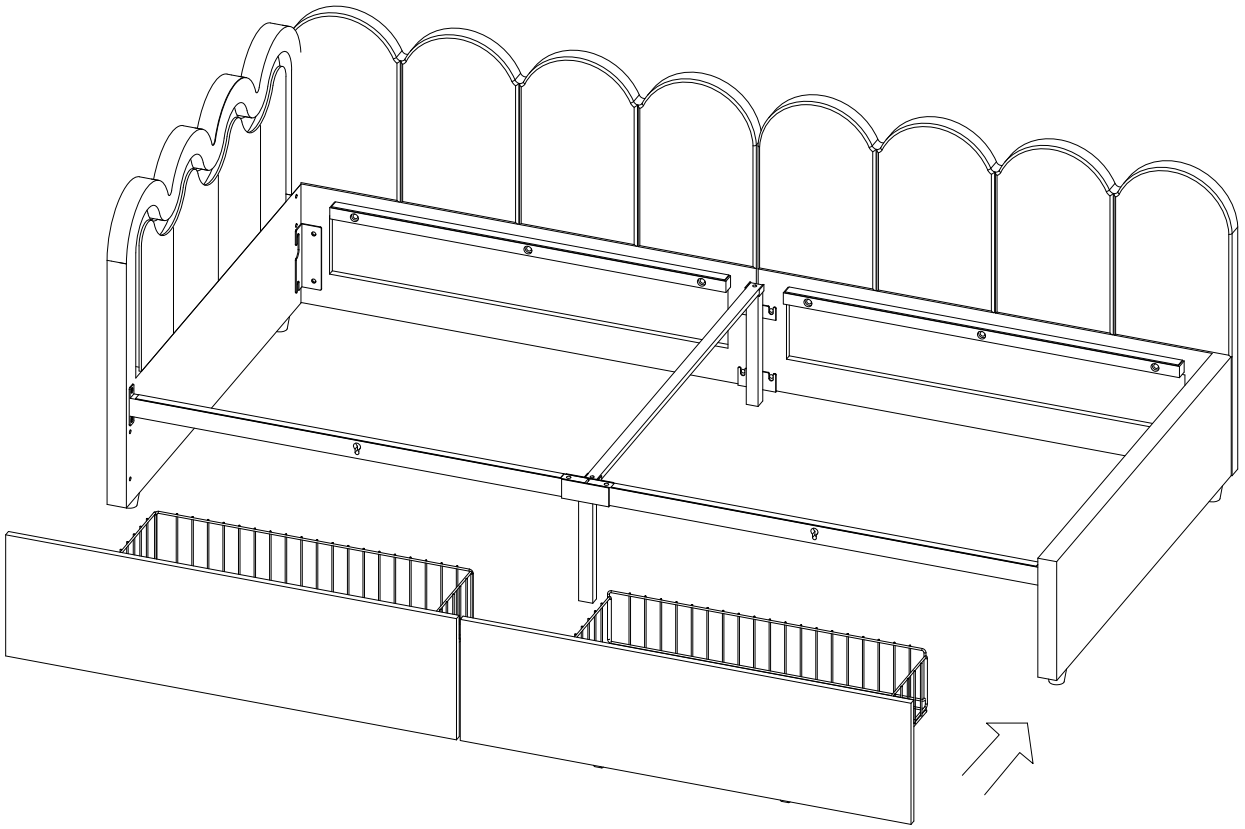

12

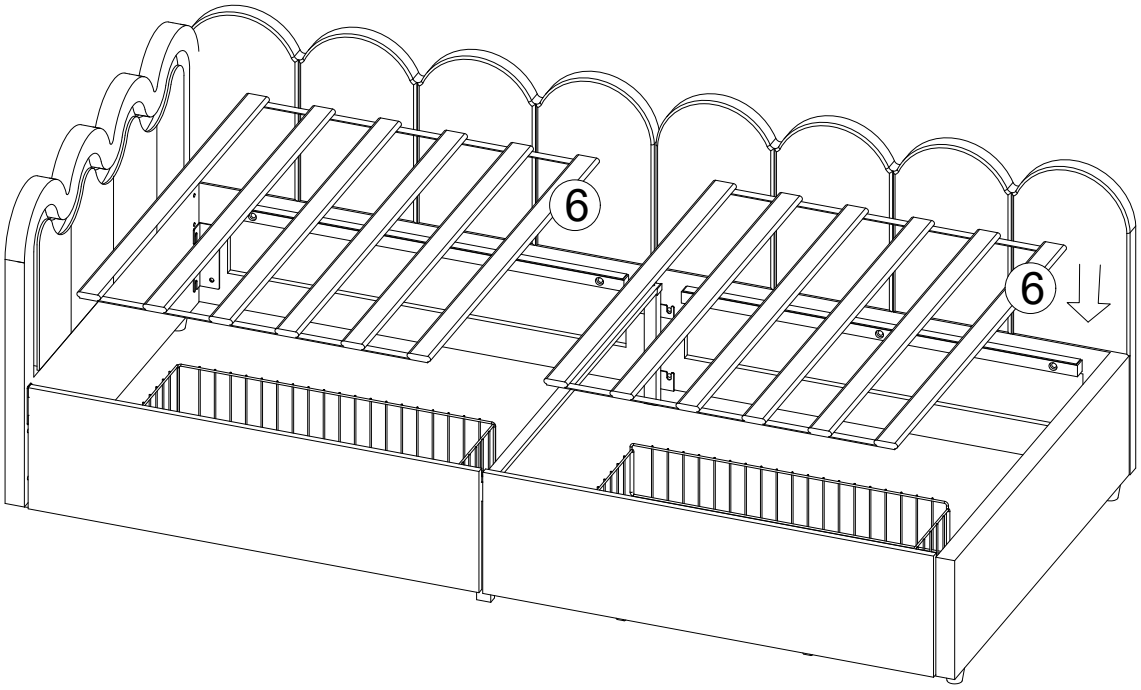

Importer	COMHARBOR LIMITED
Add	Unit C, Swift Point,Cosford Lane,Rugby,CV21 1PY,GB
Emai/URL	harborcomhar@gmai.com
Manufacturer	Dongguan Yihong Hardware Electronics Co., Ltd
Add	Room1106,No.2,ShanghengRoad,Chang ' anTown, Dongguan
Emai/URL	2568329427@qq.com
Product identification	202512
Made in	China
UK REP	COMHARBOR LIMITED Unit C, Swift Point, Cosford Lane,Rugby,CV211PY, GB harborcomhar@gmail.com

UK CA

Product Name:LED controller

Model: YH-284

Rated voltage: 5V

Rated frequency:50/60HZ

Power:5V2A ≤10W

Certificate – Сертификат – 證明書 – Certificat – 증명서 – شهادة

Shenzhen ZKT Technology Co., Ltd.
1/F, No. 101, Building B, No. 6, Tangwei Community Industrial Avenue,
Fuhai Street, Bao'an District, Shenzhen, China

Certificate of Compliance

Certificate Number: ZKT-25070215184C

Certificate's Holder	:	**Dongguan Yihong Hardware Electronics Co., Ltd Room 1106, No.2, Shangheng Road, Chang'an Town, Dongguan**
Manufacturer	:	**Dongguan Yihong Hardware Electronics Co., Ltd Room 1106, No.2, Shangheng Road, Chang'an Town, Dongguan**
Trade Mark	:	**N/A**
Product	:	**LED controller**
Model(s)	:	**YH-6183 YH-252, YH-284, YH-290, YH-287, YH-358, YH-360, YH-6180, YH-6184**

Requirement	Standard	Report No.
Art.3.1(a) Safety	BS EN IEC 62368-1:2024+A11:2024	ZKT-25070215185S
Art.3.1(a) Health	BS EN IEC 62311:2020 BS EN 50665:2017	ZKT-25070215184E-1
Art.3.1(b) EMC	ETSI EN 301 489-1 V2.2.3 (2019-11) ETSI EN 301 489-17 V3.3.0 (2024-07)	ZKT-25070215184E-2
Art.3.2 Radio	ETSI EN 300 328 V2.2.2 (2019-07)	ZKT-25070215184E-3

This Attestation of Compliance is issued on a voluntary basis for electrical equipment below the voltage limits of Radio Equipment Directive (RED) 2014/53/EU. The essential requirement are fulfilled accordingly based on the technical specifications applicable at the time of issuance.

UK CA

Shenzhen ZKT Technology Co., Ltd.
Approved
Manager
Jul. 07, 2025

This Certificate of Conformity is based on single evaluation of the submitted sample(s) of the above mentioned product. It does not imply an assessment of the whole product and relevant . Directives to be observed.

Attestation of compliance Attestation of compliance Attestation of compliance Attestation of compliance

Attestation of Compliance

Declaration No.:	TMC210319128-E
Name and address of Applicant:	**Shenzhen CWG Technology Co., Ltd** 5 / F, No.264 Baoshi East Road, Shiyan street, Bao'an District, Shenzhen,China 518108
Name and address of Manufacturer:	**Shenzhen CWG Technology Co., Ltd** 5 / F, No.264 Baoshi East Road, Shiyan street, Bao'an District, Shenzhen,China 518108
Product name:	**LED Strip**
Rated：	DC12V
Product model(s):	CWG-5050RGB-60D-12V,CWG-5050RGB-30D-12V , CWG-5050RGB-18D-12V, CWG-5050RGB-60D-24V, CWG-5050RGB-60D-5V, CWG-5050RGB-30D-5V, CWG-5050RGB-18D-5V, CWG-5050-60D-12V, CWG-5050-30D-12V, CWG-5050-60D-24V, CWG-HC5050RGB-60D-12V, CWG-HC5050RGB-30D-12V, CWG-HC5050RGB-60D-24V, CWG-HC5050-60D-12V, CWG-HC5050-30D-12V, CWG-HC5050-60D-24V, CWG-HC5050RGB-30D-5V, CWG-HC5050RGB-60D-5V, CWG-HC5050RGB-144D-5V, CWG-2835-60D-12V, CWG-2835-120D-12V，CWG-2835-60D-24V, CWG-2835-120D-24V, CWG-2835-60D-5V，CWG-2835-120D-5V
Product trademark:	创唯光

This Attestation of Compliance confirms that the product meets the requirements of the following standard.

BS EN IEC 55015:2019+A11:2020 IEC 61547:2020

The Attestation of Compliance has been carried out in accordance with individual rules and conditions agreed with the applicant. Evaluation has been carried out in accordance with:

Test report(s) No.:	TMC210319128-E
Test conducted by:	TMC Testing Services (Shenzhen) Co., Ltd.
Declaration issue date:	March 26, 2021

Notes:

This Attestation of Compliance is issued according to the Great Britain legislation Electromagnetic Compatibility Regulations 2016 It confirms that the listed products complies with all essential requirements of the Regulations and applies only to the sample and its technical documentation to TMC Testing Services (Shenzhen) Co., Ltd. for testing.

After preparation of the necessary technical documentation (which must be kept for up 10 years after the product is placed on the GB market) as well as the UK Declaration of Conformity, the required UKCA marking can be affixed on the product. Other relevant Regulations have to be observed.

TMC Testing Services (Shenzhen) Co., Ltd.
t:86-755-86642861 cert@tmc-lab.com www.tmc-lab.com
1st Floor, Block A1, Zone A, Xinshidai Gongrong Industrial Park, No. 2, Shihuan Road, Shiyan Street, Baoan District, Shenzhen, China

Bauart geprüft TMC Access to global market Product Safety Type Approved

Lab L

Lemon Rao

UK CA

TMC

Verification of compliance Verification of compliance Verification of compliance Verification of compliance

Verification of Compliance

Verification No.:	MK25070091P01-C01
Name and address of Applicant:	**Shenzhen CWG Technology Co., Ltd** 3/F, Building A, Yongshenghui Industrial Park, Chuangye Road, Shiyan Street, Bao'an District, Shenzhen
Name and address of Manufacturer:	**Shenzhen CWG Technology Co., Ltd** 3/F, Building A, Yongshenghui Industrial Park, Chuangye Road, Shiyan Street, Bao'an District, Shenzhen
Product name:	**LED Strip**
Product model(s):	CWG-5050RGB-60D-5V, CWG-5050RGB-30D-12V, CWG-5050RGB-18D-12V, CWG-5050RGB-60D-24V, CWG-5050RGB-60D-12V, CWG-5050RGB-30D-5V, CWG-5050RGB-18D-5V, CWG-5050-60D-12V, CWG-5050-30D-12V, CWG-5050-60D-24V, CWG-HC5050RGB-60D-12V, CWG-HC5050RGB-30D-12V,CWG-HC5050RGB-60D-24V, CWG-HC5050-60D-12V, CWG-HC5050-30D-12V, CWG-HC5050-60D-24V, CWG-HC5050RGB-30D-5V, CWG-HC5050RGB-60D-5V, CWG-HC5050RGB-144D-5V, CWG-2835-60D-12V, CWG-2835-120D-12V, CWG-2835-60D-24V, CWG-2835-120D-24V, CWG-2835-60D-5V, CWG-2835-120D-5V
Product trademark:	创唯光

This verification confirms that the product meets the requirements of the following standard.
The conformity was demonstrated based on following standard(s) listed by European Commission as harmonized with Directive RoHS 2.0 Directive (EU) 2015/863 and (EU)2017/2102 amending Annex II to Directive 2011/65/EU

IEC 62321-1:2013	IEC 62321-3-1:2013
IEC 62321-4:2013/AMD1:2017	IEC 62321-5:2013
IEC 62321-6:2015	IEC 62321-7-1:2015
IEC 62321-7-2:2017	IEC 62321-8:2017
IEC 62321-2:2021	

The verification has been carried out in accordance with individual rules and conditions agreed with the applicant. Evaluation has been carried out in accordance with:

Test report(s) No.:	MK25070091P01-C01
Test conducted by:	TMC Testing Services (Shenzhen) Co., Ltd.
Verification issue date:	July 17, 2025

Notes:
This verification refers to the above mentioned product and its conformity in regards of above mentioned standard(s) was proven on test sample.
This verification does not imply meeting all essential requirements, assessment of the series-production or any other restricted Notified Bodies conformity assessment procedure appropriate for the product.
This verification holder shall use this verification in connection to verification of conformity and technical data relevant for the product the verification was issued.

TMC Testing Services (Shenzhen) Co., Ltd.
t:86-755-86642861 cert@tmc-lab.com www.tmc-lab.com
1st Floor, Block A1, Zone A, Xinshidai Gongrong Industrial Park, No. 2, Shihuan Road, Shiyan Street, Baoan District, Shenzhen, China

Bauart geprüft TMC Product Safety Type approved

Lab: Vivian Jiang
Vivian Jiang

CE

Verification of compliance Verification of compliance Verification of compliance Verification of compliance

Verification of Compliance

Verification No.:	MK25070091P01-E01
Name and address of Applicant:	**Shenzhen CWG Technology Co., Ltd** 3/F, Building A, Yongshenghui Industrial Park, Chuangye Road, Shiyan Street, Bao'an District, Shenzhen
Name and address of Manufacturer	**Shenzhen CWG Technology Co., Ltd** 3/F, Building A, Yongshenghui Industrial Park, Chuangye Road, Shiyan Street, Bao'an District, Shenzhen
Product name:	**LED Strip**
Rated:	5V ⎓
Product model(s):	CWG-5050RGB-60D-5V, CWG-5050RGB-30D-12V, CWG-5050RGB-18D-12V, CWG-5050RGB-60D-24V, CWG-5050RGB-60D-12V, CWG-5050RGB-30D-5V, CWG-5050RGB-18D-5V, CWG-5050-60D-12V, CWG-5050-30D-12V, CWG-5050-60D-24V, CWG-HC5050RGB-60D-12V, CWG-HC5050RGB-30D-12V,CWG-HC5050RGB-60D-24V, CWG-HC5050-60D-12V, CWG-HC5050-30D-12V, CWG-HC5050-60D-24V, CWG-HC5050RGB-30D-5V, CWG-HC5050RGB-60D-5V, CWG-HC5050RGB-144D-5V, CWG-2835-60D-12V, CWG-2835-120D-12V, CWG-2835-60D-24V, CWG-2835-120D-24V, CWG-2835-60D-5V, CWG-2835-120D-5V
Product trademark:	创唯光

This verification confirms that the product meets the requirements of the following standard.
The conformity was demonstrated based on following standard(s) listed by European Commission as harmonized with EMC Directive 2014/30/EU.

EN IEC 55015:2019+A11:2020
EN IEC 61547:2023

The verification has been carried out in accordance with individual rules and conditions agreed with the applicant. Evaluation has been carried out in accordance with:

Test report(s) No.:	MK25070091P01-E01
Test conducted by:	TMC Testing Services (Shenzhen) Co., Ltd.
Verification issue date:	July 17, 2025

Notes:
This verification refers to the above mentioned product and its conformity in regards of above mentioned standard(s) was proven on test sample.
This verification does not imply meeting all essential requirements, assessment of the series-production or any other restricted Notified Bodies conformity assessment procedure appropriate for the product.
This verification holder shall use this verification in connection to verification of conformity and technical data relevant for the product the verification was issued.

TMC Testing Services (Shenzhen) Co., Ltd.
t:86-755-86642861 cert@tmc-lab.com www.tmc-lab.com
1st Floor, Block A1, Zone A, Xinshidai Gongrong Industrial Park, No. 2, Shihuan Road, Shiyan Street, Baoan District, Shenzhen, China

Bauart geprüft TMC Access to global market Product Safety

Lab
Vivian Jiang

CE

精准检测
PRECISE TESTING

CERTIFICATE OF CONFORMITY

No.: PTC25102309602C-EN01V02

Applicant	:	**Dongguan Yihong Hardware electronics Co., LTD**
Address	:	**Room 901, No. 2, Shangheng Road, Chang'an Town, Dongguan City, Guangdong Province, 523880 China**
Manufacturer	:	**Dongguan Yihong Hardware electronics Co., LTD**
Address	:	**Room 901, No. 2, Shangheng Road, Chang'an Town, Dongguan City, Guangdong Province, 523880 China**
Product Name	:	**LED Controler**
Model No.	:	**YH-289,YH-980 ,YH-284 ,YH-917 ,YH-818,YH-816,YH-6181,YH-358**

The submitted sample of the above equipment has been tested and found to comply with the following European Directive:

RoHS Directive 2011/65/EU & EU No.2015/863

The standard(s) used for showing compliance with the essential requirements:

Applicable Standard(s)	Test Report(s) Number
IEC 62321-1:2013, IEC 62321-2:2021 IEC 62321-3-1:2013, IEC 62321-3-2:2020 IEC62321-4: 2013+AMD1:2017 IEC 62321-5:2013 IEC 62321-6:2015, IEC 62321-7-1: 2015 IEC 62321-7-2: 2017, IEC 62321-8:2017	**PTC25102309602C-EN01V02**

This certificate is part of the full test report(s) and should be read in conjunction with it. This certificate is based on an evaluation of one sample of above mentioned product. It does not imply assessment of the production of the product. Without the written approval of Precise Testing & Certification (Guangdong) Co., Ltd., this certificate is not permitted to be reproduced, except in full. It is not permitted to use the test lab's logo.

RoHS

PRECISE TESTING & CERTIFICATION (GUANGDONG) CO., LTD.

Jacky Ou
Manager
Date:Dec. 11, 2025

Precise Testing & Certification (Guangdong) Co., Ltd.
Building 1, No.6, Tongxin Road, Dongcheng Street,
Dongguan, Guangdong, China
Tel: 86 769 38808222 Web:www.ptc-testing.com
Mail: inquiry@ptc-testing.com