# TREADMILL
# USER'S MANUAL

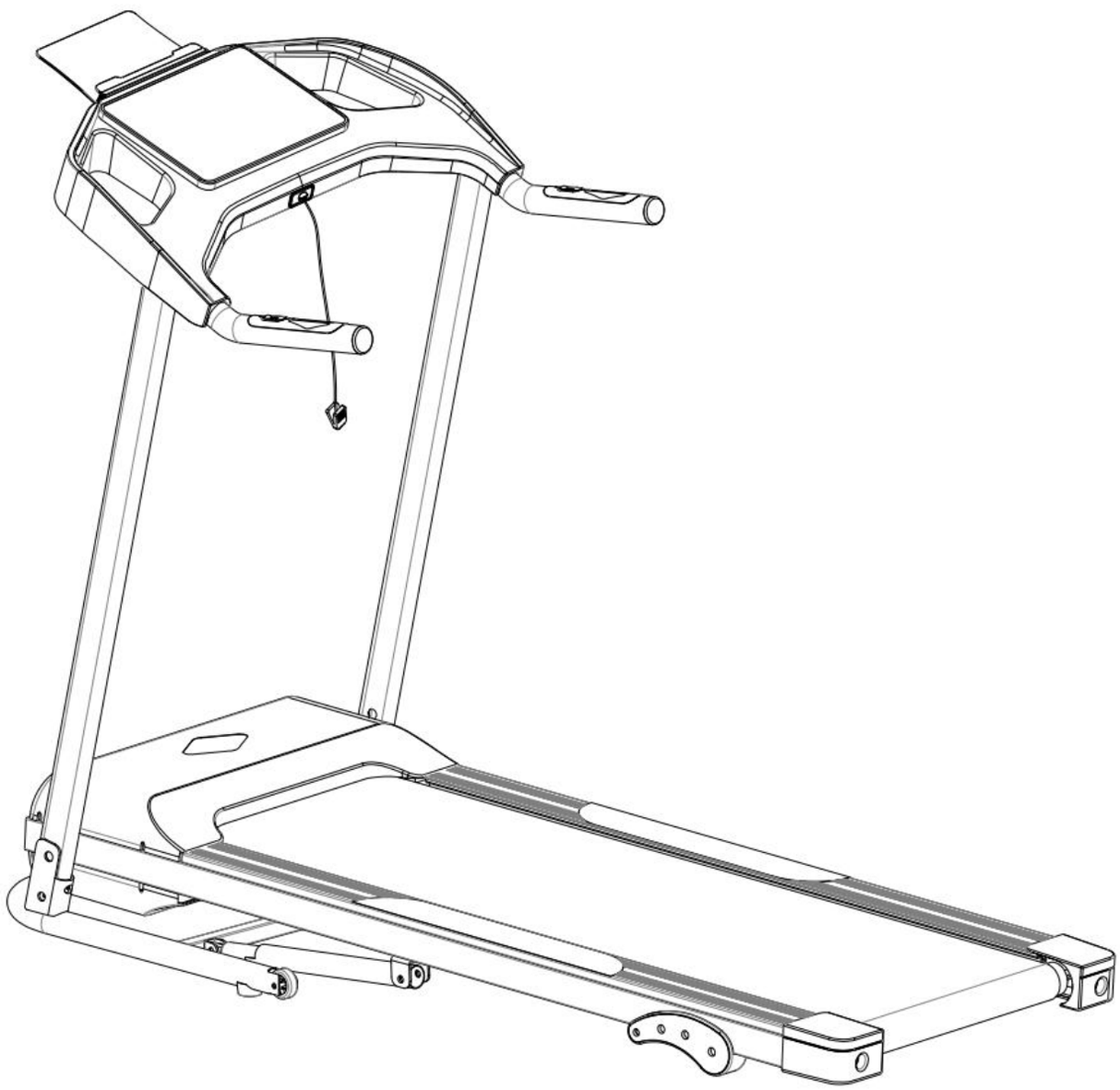

**Read all instruction carefully before use this product. Retain this owner's manual for the future's reference.**

# SAFETY PRECAUTIONS

**Warning:** Now here we suggest that you should consult with your physician or health professional before starting your workout, especially for the age up to 35 old or once-health problem people. We take no responsible for any troubles or hurts if you don't following our specification. Treadmill will be carefully assembled and covered the motor shield, then connect to the power.

## ⚠ Attention

① Before using the treadmill, **please be sure to place the safety lock, otherwise it can not start**, make sure the safety switch clip on your clothes or belt.
② Position the treadmill on a clear, level surface. **Do not place the treadmill on thick carpet** as it may interfere with proper ventilation. Do not place the treadmill near water or outdoors.
③ Do not connect line to the middle of cable; do not lengthen cable or change the cable plug; do not put any heavy thing on cable or put the cable near the heat source; **forbid using socket with several holes**, these may cause fire or people may be hurt by the power.
④ Cut off the power when the equipment is not used. When the power is cut off, do not pull the power line to keep thee wire unbroken. Insert the plug to the socket with the safety ground circuit, for the power-line is professional equipment .You must contact with the professional people directly while the line is damaged.
⑤ Please do not insert any items to any part of the equipment, which would damage the equipment.
⑥ Never start the treadmill while you are standing on the walking belt. After turning the power on and adjusting the speed control, there may be a pause before the walking belt begins to move, always stand on the foot rails on the sides of the frame until the belt is moving.
⑦ Wear appropriate clothing when exercising on the treadmill. Do not wear long, loose fitting clothing that may be caught in the treadmill. Always wear running or aerobic shoes with rubber soles.
⑧ Keep the children and pets away from the treadmill while starting workout.
⑨ Don't exercise in 40-Mints after dinner.
⑩ The equipment is suitable for adults, Juveniles need be accompanied with adults while workout.
⑪ You must hold on to the handrails until you become comfortable and familiar with the treadmill at your first start the workout.
⑫ Treadmill is indoor-using equipment, not outdoor-using for avoiding damage. Keep the store-place clean and flat, drying. Prohibiting the other purpose using, only for workout.
⑬ Please purchase the power-line to the distributor or contact with our company directly, for the power-line only equip to the treadmill.
⑭ If the treadmill should suddenly increase in speed due to an electronics failure or the speed being inadvertently increased, the treadmill will come to a sudden stop when the pull pin is disengaged from the console.
⑮ **Safety area behind the treadmill：1000*2000MM**

## PARTS OF THE TREADMILL

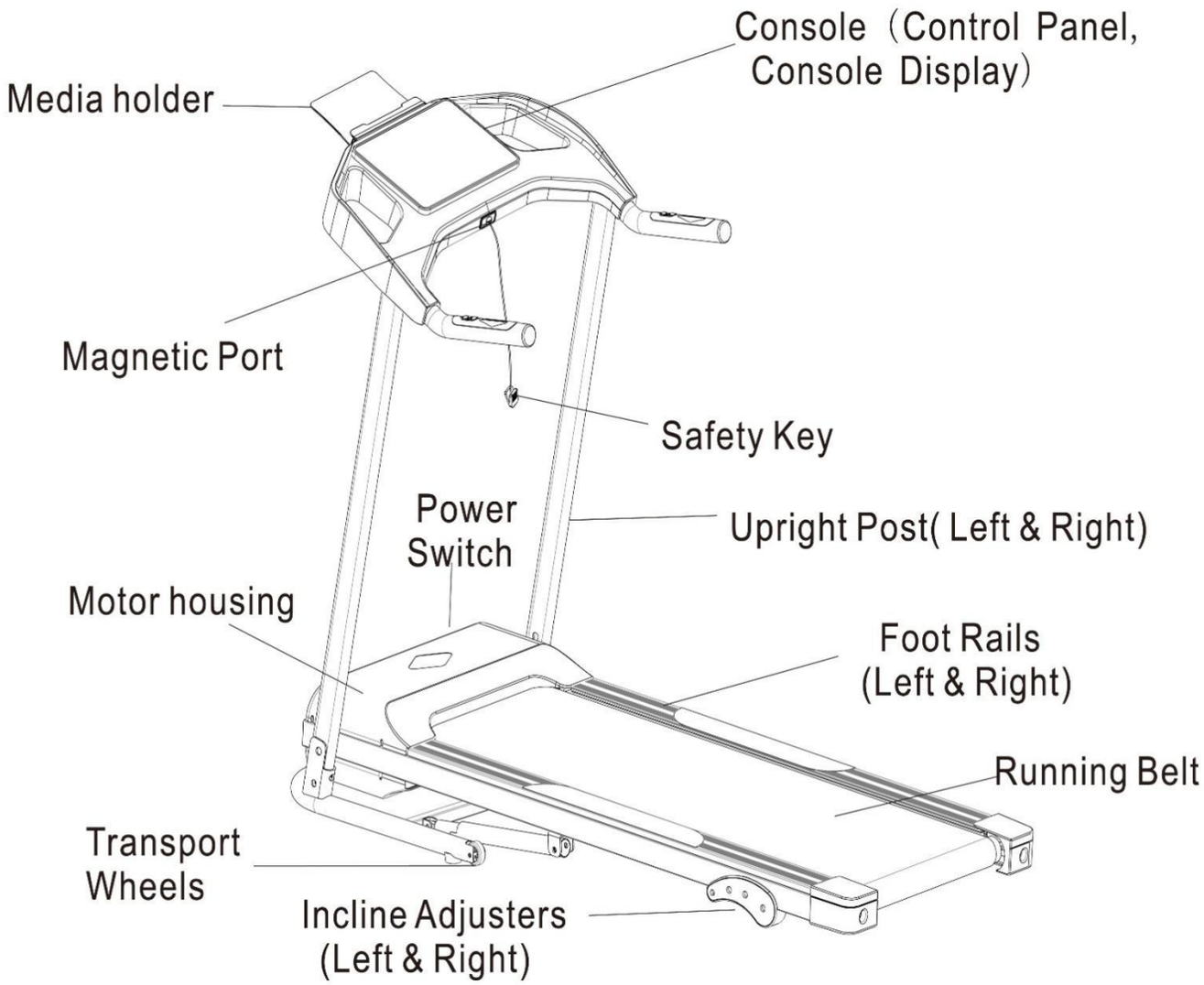

# ASSEMBLY INSTRUCTIONS

When you open the carton, and you will find the below parts in the carton.

## PART LIST

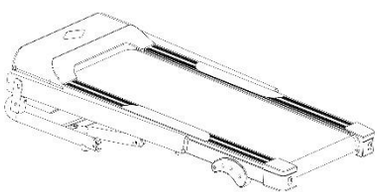

Main Frame *1

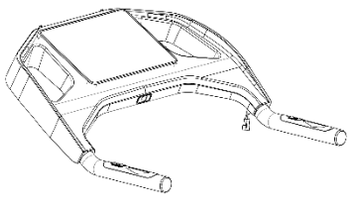

Console *1

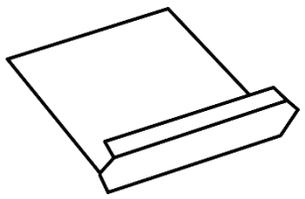

Media Holder *1

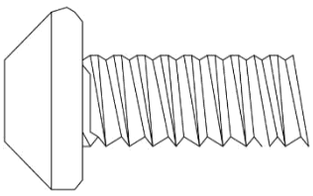

#50 M8*16mm *6 Bolt

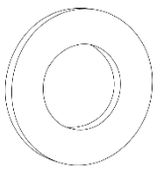

#46 Flat Washer*2

#57 Curved Washer * 4

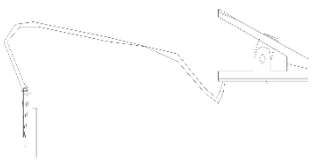

#61 Safety Key * 1

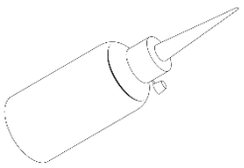

#64 Silicone Oil *1

#62 Allen Wrench *1

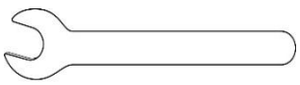

#65 Open Wrench * 1

## FIXING TOOLS:

#62 Allen Wrench 5mm 1pc, #65 Open Wrench 1pc.

**Notice: Do not get through power before complete assembly.**

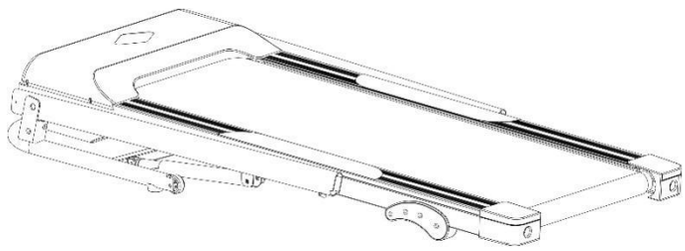

## STEP 1

Open the carton, take out the above spare parts, put the Main Frame on the level ground.

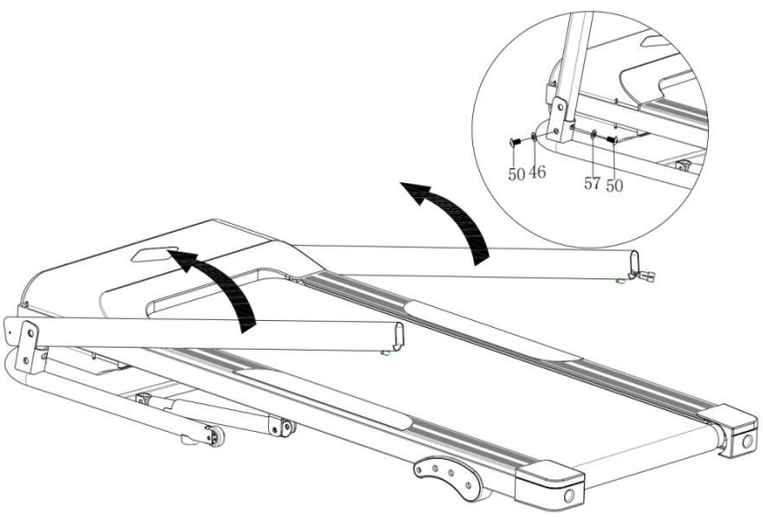


## STEP 2

1, According to the arrow direction in below picture, lift upright post at the same time.
2, use the M8x16 bolts (50) and curved washer (57) and flat washer(46) to fix the both upright post as below photo.

**Notice: Support the upright with hand to avoid falling down to have any hurt.**

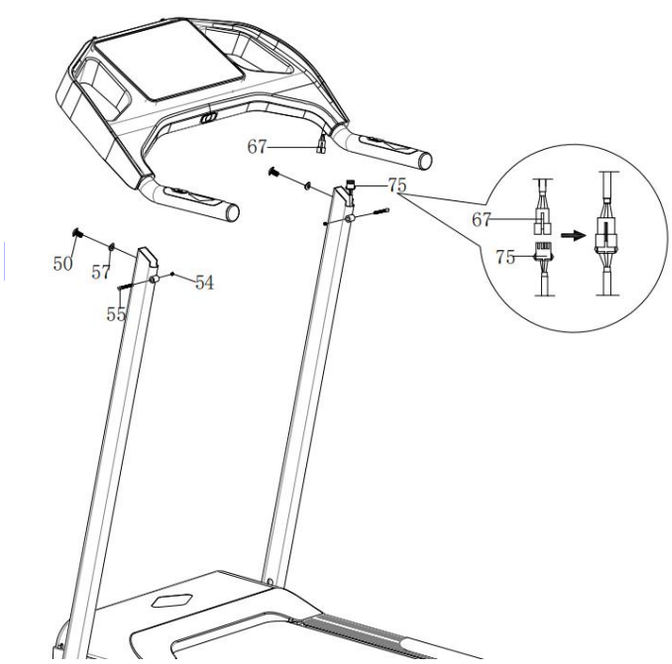


## STEP 3

First connect the cable(67) from console and cable(75)from the upright post. Please ensure that the installation is in the correct direction

Remove the M6x30 bolts (55) from the console, and use the same bolts fit the console on upright post,.

Use the M8x16 bolts (50) and curved washers (57) to fix the console on upright post tightly as below picture.

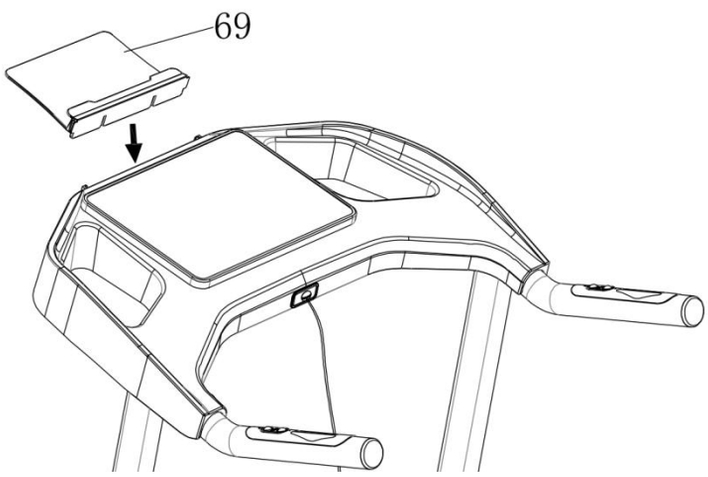


## STEP 4

Put the  the media holder (69) on the console。

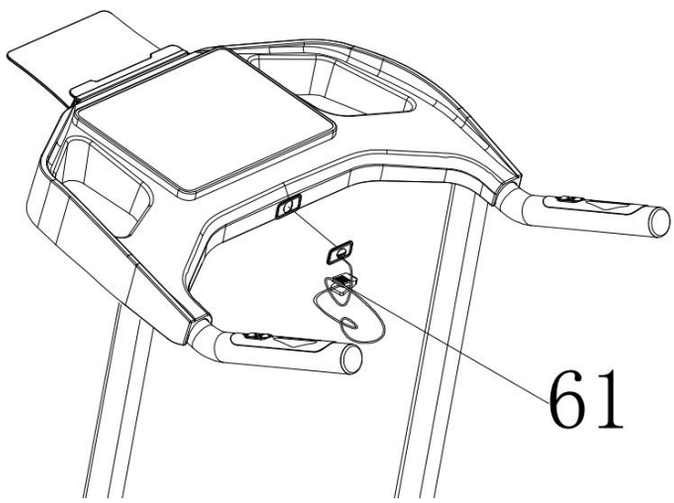


## STEP 5

Put the safety key(61) on the middle of console

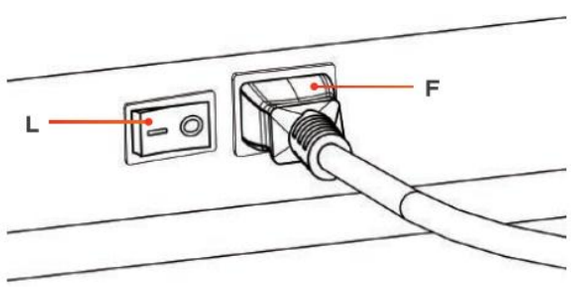


## STEP 6

Connect the power cord to the power socket and turn on the power switch

**ATTENTION：Please confirm complete assembly as the require above and lock all the bolt. Do the following operation after checking everything is OK. Before you use the treadmill, please read the instruction carefully.**

# FOLDING INSTRUCTION

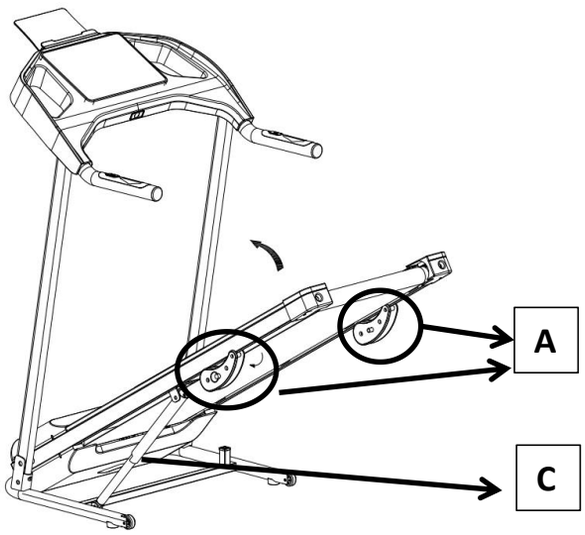


## Pulling up

1.Adjust the both slope adjustment to this position(A)
2.Move pin to first hole as below photo(B).
2.Pull up the base frame till hearing the sound that air pressure bar(C） is locked into the round tube

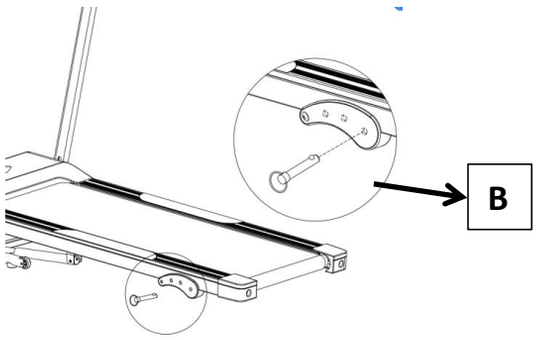


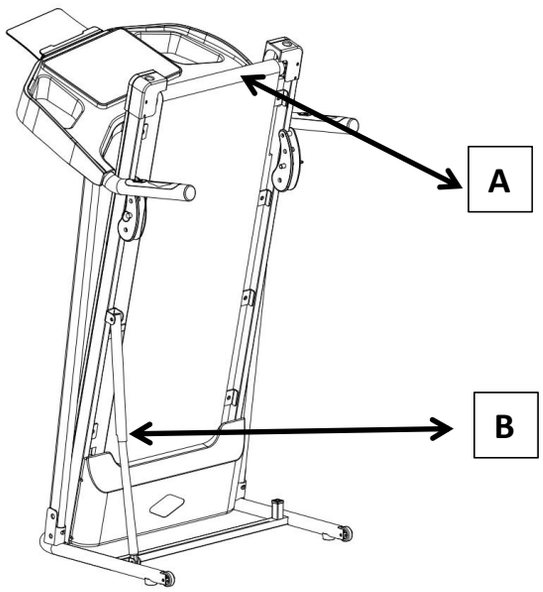


## Pulling down

Support place(A) with hand,kick the place of air Pressure bar(B), Then the base frame will fall down automatically.
(Pls keep anybody and any pet away the machine When falling down

# SLOPE ADJUSTMENT

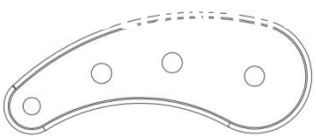

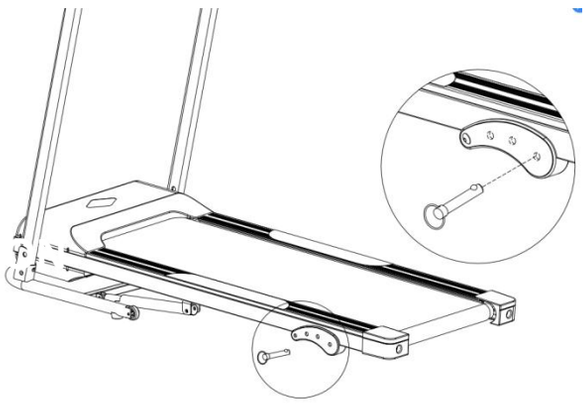

Use this pin to adjust the slope by placing it in three different positions

## TECHNICAL PARAMETER

| | | | |
|---|---|---|---|
| Built up size(mm) | 1350*630*1240mm | Power | As the rating label showing |
| Foldable size(mm) | 720*630*1240mm | Maximum output power | As the rating label showing |
| Running surface size(mm) | 380*1020mm | 1 LCD WINDOW | Speed, Time, Distance, Calories, Pulse |
| Net weight | 71.5LB | | |
| Speed range | 0.6-10MPH | | |

## GROUNDING METHODS

This product must be grounded. If it should malfunction or breakdown, grounding provides a path of least resistance for electric current to reduce the risk of electric shock. This product is equipped with a cord having an equipment-grounding conductor and a grounding plug. The plug must be plugged into an appropriate outlet that is properly installed and grounded in accordance with all local codes and ordinances.

### ⚠ DANGER

Improper connection of the equipment-grounding conductor can result in a risk of electric shock. Check with a qualified electrician or serviceman if you are in doubt as to whether the product is properly grounded. Do not modify the plug provided with the product – if it will not fit the outlet, have a proper outlet installed by a qualified electrician.

This product is for use on a nominal 100-120 volt (please choose the correct voltage) circuit and has a grounding plug that looks like the plug illustrated in sketch A in following figure. Make that the product is connected to an outlet having the same configuration as the plug. No adapter should be used with this product. ( The below picture is just for reference, the actual plug and jack is depends on import country)

**Grounding methods**

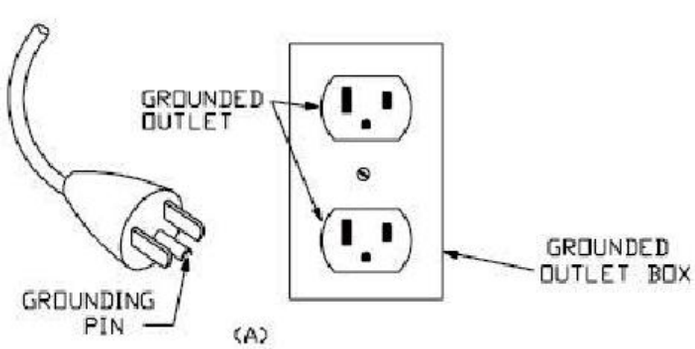

# OPERATION GUIDE

## 1. DISPLAY WINDOW

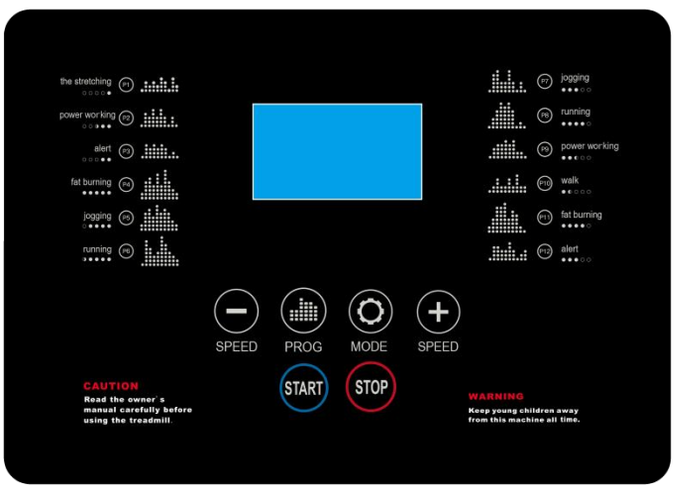


## 2. WINDOW DISPLAY DETAILS

| | |
|---|---|
| **CAL:** | Show Calories; when select program, show program number; When in bodyfat test setting, display the corresponding modified parameters |
| **TIME:** | Show running time; |
| **SPEED:** | Show speed; when setting bodyfat test, show "FAT" |
| **PULSE:** | Show heart beat data; |
| **DIST:** | Show distance. When in bodyfat test setting, display the parameter type; |

## 3.BUTTON FUNCTION

**"START" button:**

Press this button to start the machine, the machine will run at the lowest speed or at the speed of default program after 3 seconds time count down;

**"STOP" button:**

Short press the STOP button, the machine will enter a pause state. Pressing the START button again will continue the previous exercise time. Long press the STOP button, the machine will stop running and all data will be reset to 0.

**"PROG" button:**
Press this button to choose program from manual mode—P1----P12---FAT;

**"MODE" button:**
a.When machine in standby state, press this button to choose the mode: manual mode-time count down mode-distance count down mode-calories count down;
b. In the state of the lipid measurement model, the key for lipid measurement parameters is: the selection order is "sex", "age", "height", and "body weight".

**SPEED−、+:**
Adjust the speed. Press the button to adjust the speed when running, and adjust the data when stop;

**Any button that is held valid is accompanied by a beep, or a long beep when the button is used to adjust parameters and exceeds the limit. There will be no beep when the key is not pressed.**

## 4.MAJOR FUNCTION

Turn on the power and light all Windows for 2 seconds, after which it goes into standby state.

### 4.1 Quick Start (manual mode) :
Put the safety lock and press the start button. After a 3-second countdown, the treadmill will start and run from the lowest SPEED. Press the SPEED plus or minus key to adjust the SPEED. To stop running, press the stop button.

### 4.2 Reverse metering MODE:
Press the "MODE" button, and you can select successively: time reverse metering, Distance reverse metering, Heat reverse metering. The corresponding window displays the default values and flashes. At this point, press the "SPEED−, +" key to adjust to the required value. Press the START key. After a 3-second countdown, the treadmill will START and run from the lowest SPEED. Press the SPEED plus or minus adjustment key to adjust the SPEED. When the window value back counts to 0, the treadmill slows down slowly to stop. Of course, you can also directly press the "STOP" key to STOP running.

### 4.3 PROGRAM mode:
Press the "PROGRAM" button and select any P12 mode as the built-in PROGRAM. The "TIME" window displays the default value and flashes, and the "SPEED−, +" key is used to adjust the required movement TIME. The built-in program is divided into 10 segments, and the running time of each segment is set time /10. Press the START key, and the treadmill will START running according to the speed of the first section after counting back for 3 seconds. When the last section of running ends, the treadmill will automatically enter the next section of running, and the speed will be automatically adjusted to the value of this section. All segments run. At the end of the program, the treadmill slows slowly to a stop. During operation, you can press "SPEED −, +" or the handrail button to adjust the SPEED. However, it will automatically adjust to the program default value when entering the next paragraph. You can also directly press the STOP key to STOP running during the movement.

**A window that corresponds to the end of a program movement flashes and has 15 beeps, after which all data clears into standby mode.**

## 5.SAFETY KEY FUNCTION

Pull out the safety key, the treadmill will stop quickly, All normal operation must be in the state of safety key locked.

## 6. HEART BEAT TEST

When holding the hand pulse by two hands, the pulse window will show your heart beat after 5 seconds. In order to get the heart beat more correct, please test when the machine stop, and holding the hand pulse more than 30 seconds. The heart beat data is just for reference, can not be as the medical data.

## 7.RUNNING DATA DISPLAY AND SETTING RANGE

| | SHOW RANGE | DEFAULT MODE | DEFAULT PROGRAM | SET RANGE |
|---|---|---|---|---|
| SPEED(MPH) | 0.6-10MPH | -------- | -------- | 0.6-10MPH |
| TIME | 0:00—99:59 | 10:00 | 30:00 | 5:00---99:00 |
| DISTANCE | 0.00KM—999MILE | 1.00MILE | -------- | 1.0MILE—99.0MILE |
| CALORIES | 0Kcl—999Kcl | 50Kcl | -------- | 20Kcl—990Kcl |

## 8.DATE TABLE

| Program \ Time | | Set minutes/ 10 = the time of each level | | | | | | | | | |
|---|---|---|---|---|---|---|---|---|---|---|---|
| | | **1** | **2** | **3** | **4** | **5** | **6** | **7** | **8** | **9** | **10** |
| P1 | Speed | 1 | 3 | 2 | 3 | 2 | 4 | 3 | 1 | 4 | 2 |
| P2 | Speed | 1 | 4 | 3 | 4 | 3 | 5 | 3 | 1 | 3 | 1 |
| P3 | Speed | 1 | 4 | 3 | 4 | 3 | 4 | 3 | 1 | 2 | 1 |
| P4 | Speed | 2 | 5 | 6 | 4 | 7 | 4 | 8 | 5 | 3 | 2 |
| P5 | Speed | 2 | 5 | 6 | 4 | 7 | 5 | 6 | 5 | 3 | 2 |
| P6 | Speed | 1 | 7 | 5 | 3 | 4 | 8 | 6 | 4 | 3 | 2 |
| P7 | Speed | 1 | 5 | 6 | 3 | 3 | 6 | 3 | 1 | 3 | 1 |
| P8 | Speed | 1 | 3 | 5 | 7 | 6 | 7 | 5 | 1 | 2 | 1 |
| P9 | Speed | 1 | 3 | 4 | 4 | 5 | 4 | 5 | 2 | 2 | 1 |
| P10 | Speed | 1 | 2 | 4 | 2 | 2 | 4 | 2 | 5 | 2 | 2 |
| P11 | Speed | 2 | 4 | 7 | 7 | 8 | 4 | 6 | 5 | 2 | 1 |
| P12 | Speed | 1 | 4 | 4 | 3 | 3 | 5 | 3 | 1 | 2 | 3 |

## 9. BODY FAT TEST

Press 'PROGRAM' button under ready condition, till 'FAT' show in the window. 'FAT' is body fat test mode. Press 'MODE' to choose parameter 'SEX / AGE / HEIGHT / WEIGHT', and the window will show "F-1" "F-2", "F-3", "F-4". When set each parameter, press SPEED −/+ to adjust the data, and the window will show the data and press 'MODE' button to finish, and the window will show "F-5" and "---" enter into ready condition. Hold the handle pulse with two hands, it will show your BMI data after 5 seconds.

### 9.1 Data display and set range

| Parameter Type | default | Setting range | mark |
|---|---|---|---|
| SEX（F-1） | 1（MALE） | 1—2 | 1=MALE 2=FEMALE |
| AGE（F-2） | 25 | 10—99 | |
| HEIGHT（F-3） | 67 INCH | 39-79 INCH | |
| WEIGHT（F-4） | 154 LB | 44—331 LB | |

### 9.2 BMI reference

| （BMI） | |
|---|---|
| FAT≤19 | Under weight |
| 19<FAT ≤26 | Normal weight |
| 26<FAT ≤30 | Over weigh |
| FAT≥31 | Obesity |

# TROUBLE SHOOTING GUIDE

| CODE | REASON | SOLUTION |
|---|---|---|
| Er 1 | Communication Failure | 1. Check the communications cable<br>2. Change console<br>3. Change control board |
| Er 2 | Motor not working | 1. Reconnect the motor wire<br>2. Replace the motor<br>3. Please set up the test if the power over the hour error Possible Reasons:<br>4. motor wire is not properly connected |
| Er 3 | Over Voltage | 1. Check whether the input voltage is normal |
| Er 4 | Over power current | 1. Adjust the torque potentiometer to the appropriate position<br>2. Replace the motor<br>3. Adjust transmission parts, or add lubricating oil Possible Reasons:<br>4. too much torque on drive<br>5. internal short circuit of motor<br>6. transmission parts stuck |
| Er 7 | Controller doesn't receive signal | 1. Check cable if connect to controller<br>2. Change control board |
| Er 13 | IGBT short circuit | 1. Change the control board |
| Er 14 | Load short circuit | 1. Change the motor<br>2. Change the control board |

# EXERCISE INSTRUCTIONS

| | |
|---|---|
| **WARM UP STAGE:** | • If you are over 35 years old, or not very healthy, also it's your first time exercise, please consult with your doctor or professional person.<br>• Before you use the motorized treadmill, please learn how to control the machine, know well how to start, stop, adjust the speed and so on, don't stand on the machine at this time. After that, you can use the machine. Stand on anti-slip pad both sides and handle the handle bar with your both hands. Keep the machine at the low speed about 1-2MPH , then test the running machine by one foot, after get used to the speed, then you can run on the machine and you can add the speed between 1.9 and 3.1MPH. Keep the speed about 10 minutes, then stop the machine. |
| **EXERCISE STAGE:** | • Learn how to adjust the speed and incline before using. Walk about 1 km at stable velocity and write down the time, it will take you about 15-25 minutes. If walk at 4.8 km/h, it will take you about 12 minutes in 1 km. If you feel comfortable at the stable velocity, you can add the speed and incline, after 30 minutes, you can have good exercise. At this stage, you can not add the speed or incline too much at one time, it can keep you feel comfortable. |
| **EXERCISE INTENSITY:** | • Warm up at the speed 3 MPH in 2 minutes, then add the speed to 3.3 MPH and keep walking in 2 minutes, then add to 3.6MPH and walk in 2 minutes. After that, add up 0.2MPH in each 2 minutes, until rapid breath but not feel comfortable<br>• Calorie burning---the best effective way<br>• Warm-up for 5mints by the velocity:2.5-3 MPH, then slowly increase the speed by 0.2MPH /2Mints, until up to the stable speed which you feel is comfortable for 45Mints.For improving the intensity of movement, you can maintain the speed during 1H of TV program, then increase the speed by 0.2MPH each Advertisement interval time, after that return to the original speed. You can acquaint the best efficiency of workout for calorie burning during the advertisement time and subsequent heart frequency increasing time. Finally, you should slow down the speed step by step for 4Mints. |
| **EXERCISE FREQUENCY:** | • The cycle time: 3-5times/Week, 15-60mints/Times.Make up the schedule of workout scientific, not only for your hobby.<br>• You can control the running intensity through adjusting the velocity and incline of treadmill. We suggest that you don't set the incline at first; improve the incline is the effective way to strengthen the exercise's intensity.<br>• Consult with your physician or health professional before starting your workout. The professional people can help you make up the suitable exercise time-chart according to your age and health condition, determine the velocity of movement, the intensity of exercise. Please stop at once, If you feel chest tightness, chest pain, irregular heart beat, breath difficulty, dizziness or other discomfort during exercise.<br>• You should consult with your physician or health professional as keep going.<br>• You can choose the normal walking speed or the jogging speed ,if you always take workout with treadmill.<br>• If you don't have enough experiences or confirm the testing velocity ,you can follow the instruction : |

Speed 0.6 - 1.9 MPH not well physical
Speed 1.9 - 2.8 MPH less movement and workout
Speed 2.8 - 3.7 MPH normal walking
Speed 3.7 - 4.7 MPH Fast walking
Speed 4.7 - 5.6 MPH Jogging
Speed 5.6 - 7.5 MPH intermediate speed walking

**Attention: The velocity of movement ≤3.7MPH , the normal walking; The velocity of movement ≥5MPH ,the good runner.**

## WARM UP INSTRUCTION

Before exercise, it is better to do stretching exercises. Warm muscles stretch more easily, so the first of 5 ~ 10 minutes to warm up. Then in accordance with the following methods to stop and do stretching exercises - do five times, each leg every time 10 seconds or more time to do it again after the end of the exercise.

**1. Down the stretch:** knees slightly curved, the body bent forward slowly, so that the back and shoulders relaxed, hands try to touch your toes. Maintain 10 to 15 seconds, then relax. Repeat three times to do (see Figure l).

**2. Hamstring stretch:** sitting on the clean seat, put one leg straight. Inward close to the other leg to make it close to the inside leg straight. hand try to touch the toes. Maintain 10 to 15 seconds, then relax. Repeat for each leg do three times (see Figure 2).

**3. Legs and feet tendon stretch:** two on the Rotary wall or tree stand, one foot in the post. Keep legs straight and heel to tilt the direction of the wall or tree. Maintain 10 to 15 seconds, then relax. Repeat for each leg do three times (see Figure 3).

**4. Quadriceps stretch:** the left hand wall or table to master balance, and then stretched his right hand back to seize the right foot to the buttocks with slowly pull until you feel the front thigh muscles tense. Maintain 10 to 15 seconds, then relax. Repeat for each leg to do three times (see Figure 4).

**5. Sartorius muscle (inner thigh muscles) stretch:** Foot In contrast, the knee outward to sit down. The hands grasp the feet to the groin pull. Maintain 10 to 15 seconds, then relax. Repeat three times(see Figure 5).

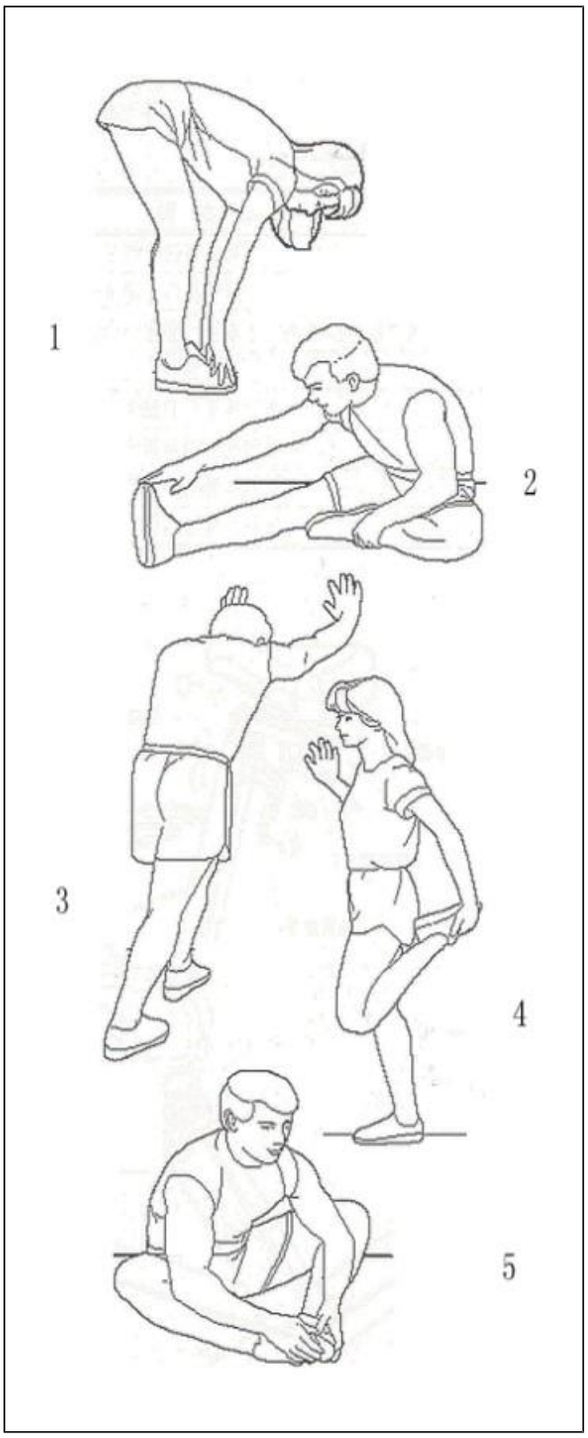

# RUNNING BELT ADJUSTMENT

**Warning:** ALWAYS UNPLUG THE TREADMILL FROM THE ELECTRICAL OUTLET BEFORE CLEANING OR SERVICING THE UNIT.

**Clean:** General cleaning or the unit will greatly prolong the treadmill.
Keep treadmill clean by dusting regularly. Be sure to clean the exposed part of the deck on either side of the walking belt and also the side rails. This reduces the build up of foreign material underneath the walking belt by wearing the clean running shoes.

Warning: Always unplug the treadmill from the electrical outlet before removing the motor cover. At least once a year remove the motor cover and vacuum under the motor cover.

## RUNNING BELT AND DECK LUBRICATION

This treadmill is equipped with a pre-lubricated, low maintenance deck system. The belt/ deck friction may play a major role in the function and life of your treadmill, thus requiring periodic lubrication. We recommend a periodic inspection of the deck. You need contact with our service center if you find the damage of the deck.

We recommend lubrication of the deck according to the following timetable:

| | |
|---|---|
| Light user (less than 3 hours/ week) | annually |
| Medium user (3-5 hours/ week) | every six months |
| Heavy user (more than 5 hours/ week) | every three months |

We recommend that you buy the lubrication from our distributor or directly to our company.
**Attention: Any repair need the professional technician.**

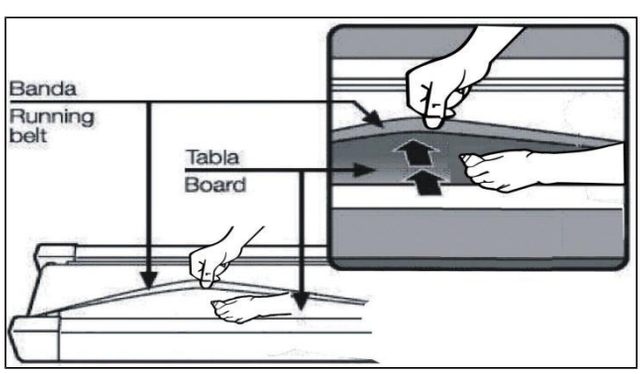


1. We suggest that you should cut off the power for 10Mints after keep running 2HS, so that it's good for maintain the treadmill.
2. For avoiding the slipping during running, the belt not too loose; for avoiding the more abrasion between the roller and belt and maintain the machine's good running, the belt not too tight. You can adjust the distance between plates and belt, the belt be away from the plates about 50-75mm on both sides, if the best not too tight and loose.

# CENTER THE RUNNING BELT

Place treadmill on a level surface. Run Treadmill at approximately 4-5MPH, checking the running condition.

- If the belt has drifted to the right, pull out of the save clock and switch, turn the right adjusting bolt 1/4 turn clockwise, then start running until centering the belt. PIC A

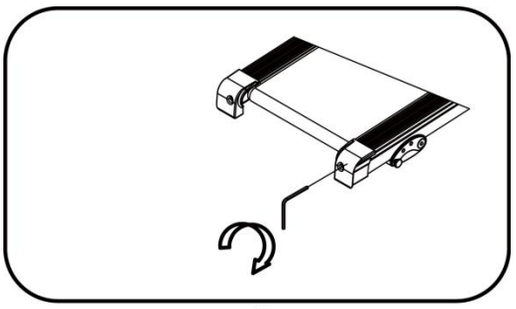

A

- If the belt has drifted to the left, pull out of the safety clock and switch, turn the left adjusting bolt 1/4 turn clockwise, then start running until centering the belt .PIC B

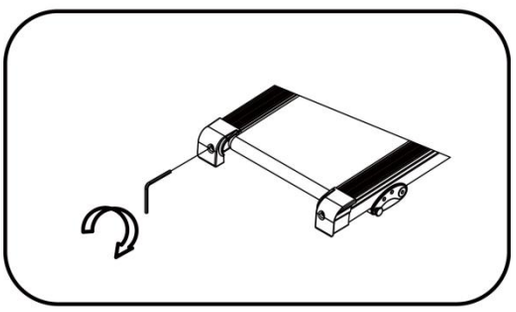

B

- Timely adjust the tightness of the belt, for the looseness after a period of time running. Pull out of the safety clock and switch, turn the left and right adjusting bolt 1/4 turn clockwise, then re-start running, confirm the belt-tightness until the belt be right tightness. PIC C

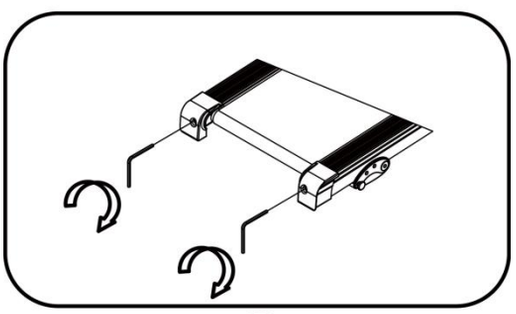

C

# EXPLODED PARTS DIAGRAM

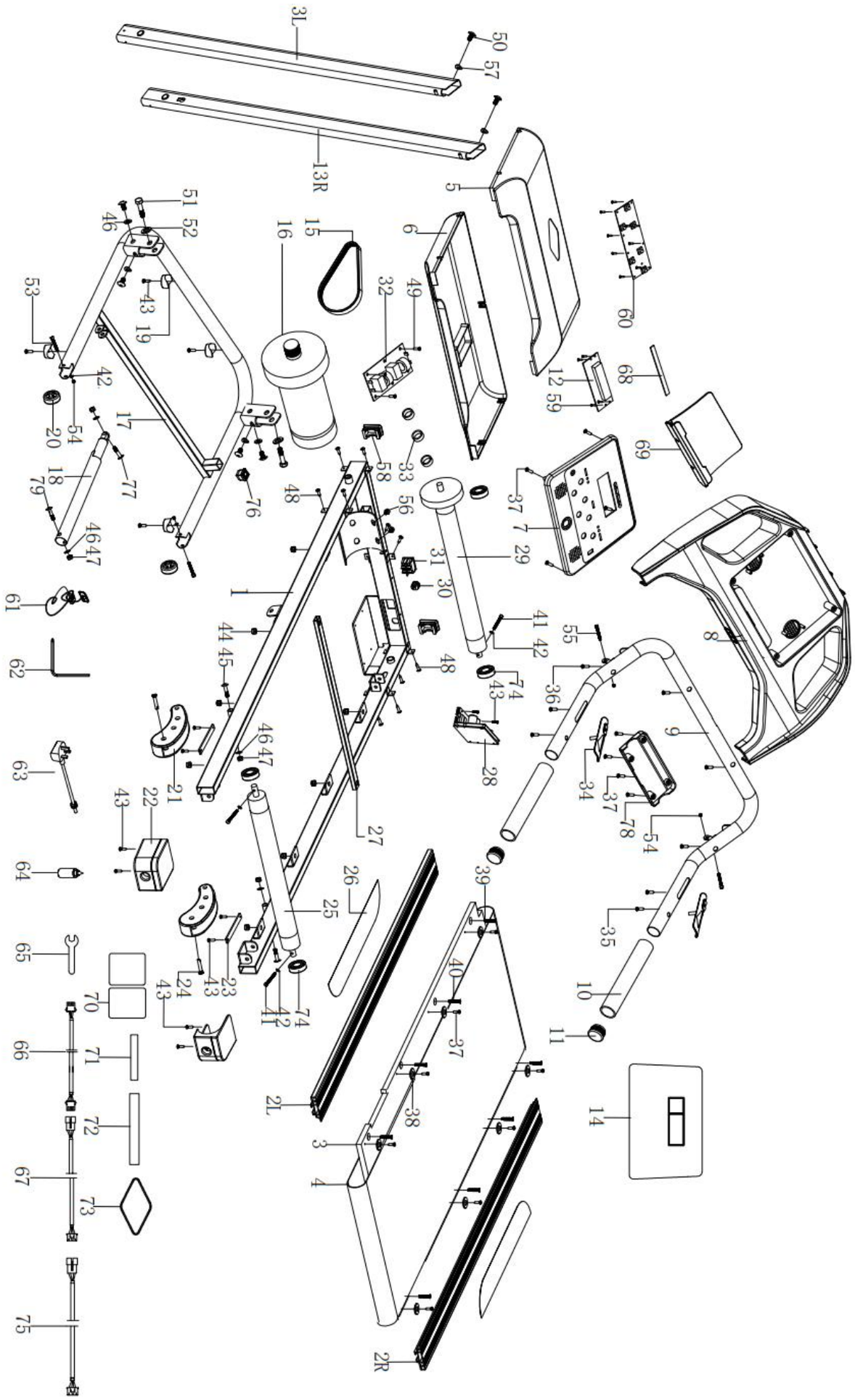

# PART LIST

| NO. | DESCRIPTION | QTY | NO. | DESCRIPTION | QTY |
|---|---|---|---|---|---|
| 1 | main frame | 1 | 41 | bolt M6*55 | 3 |
| 2 | Foot rails (L+R) | 2 | 42 | flat washer ϕ6.4-ϕ11*1.0 | 5 |
| 3 | running board | 1 | 43 | screw M4.2*13 | 14 |
| 4 | running belt | 1 | 44 | M8 nut | 8 |
| 5 | motor top cover | 1 | 45 | bolt M8*40 | 2 |
| 6 | motor down cover | 1 | 46 | flat washer ϕ8.4-ϕ16*0.8 | 6 |
| 7 | console upper cover | 1 | 47 | M8 nut | 4 |
| 8 | console plastic | 1 | 48 | bolt M5*14 | 10 |
| 9 | handle bar frame | 1 | 49 | Bolt M8*45mml | 1 |
| 10 | handle bar foam | 2 | 50 | bolt M8*16 | 6 |
| 11 | tube cover | 2 | 51 | bolt M12*65 | 2 |
| 12 | LCD display | 1 | 52 | flat washer ϕ25-ϕ13*T2 | 2 |
| 13 | upright post | 2 | 53 | bolt M6*40 | 2 |
| 14 | Sticker for console | 1 | 54 | M6 nut | 4 |
| 15 | motor belt | 1 | 55 | bolt M6*30 | 2 |
| 16 | Motor | 1 | 56 | bolt M8*10 | 2 |
| 17 | under frame | 1 | 57 | curved washer | 4 |
| 18 | Gas spring | 1 | 58 | pipe plug for main frame | 2 |
| 19 | foot pad for under frame | 4 | 59 | screw M3*7 | 12 |
| 20 | Wheel | 2 | 60 | key board | 1 |
| 21 | Incline adjuster | 2 | 61 | safety key | 1 |
| 22 | end cap | 2 | 62 | Allen key | 1 |
| 23 | rubber pad | 2 | 63 | Power cable | 1 |
| 24 | manual incline bolt | 2 | 64 | silicone oil | 1 |
| 25 | rear roller | 1 | 65 | Open spanner | 1 |
| 26 | non-slip sticker | 2 | 66 | lower connect cable | 1 |
| 27 | deck support bar | 1 | 67 | upper connect cable | 1 |
| 28 | controller board | 1 | 68 | EVA foam | 1 |
| 29 | front roller | 1 | 69 | Media holder | 1 |
| 30 | cable lock | 1 | 70 | end cap caution sticker L R | 2 |
| 31 | Switch | 1 | 71 | Supporting frame Logo sticker L R | 1 |
| 32 | Lower console plastic cover | 1 | 72 | Main frame Logo sticker L R | 1 |
| 33 | magnetic ring | 3 | 73 | Motor cover sticker | 1 |
| 34 | shortcut key on handrail | 2 | 74 | 6301 bearing | 4 |
| 35 | bolt M4.2*20 | 4 | 75 | Middle connect cable | 1 |
| 36 | bolt M4.2*16 | 4 | 76 | End cap 20x20mm | 1 |
| 37 | screw M4*13 | 16 | 77 | Bolt m8*30mml | 1 |
| 38 | side rail fixer | 8 | | | |
| 39 | bolt M8*25 | 6 | | | |
| 40 | bolt M8*35 | 2 | | | |

MADE IN CHINA