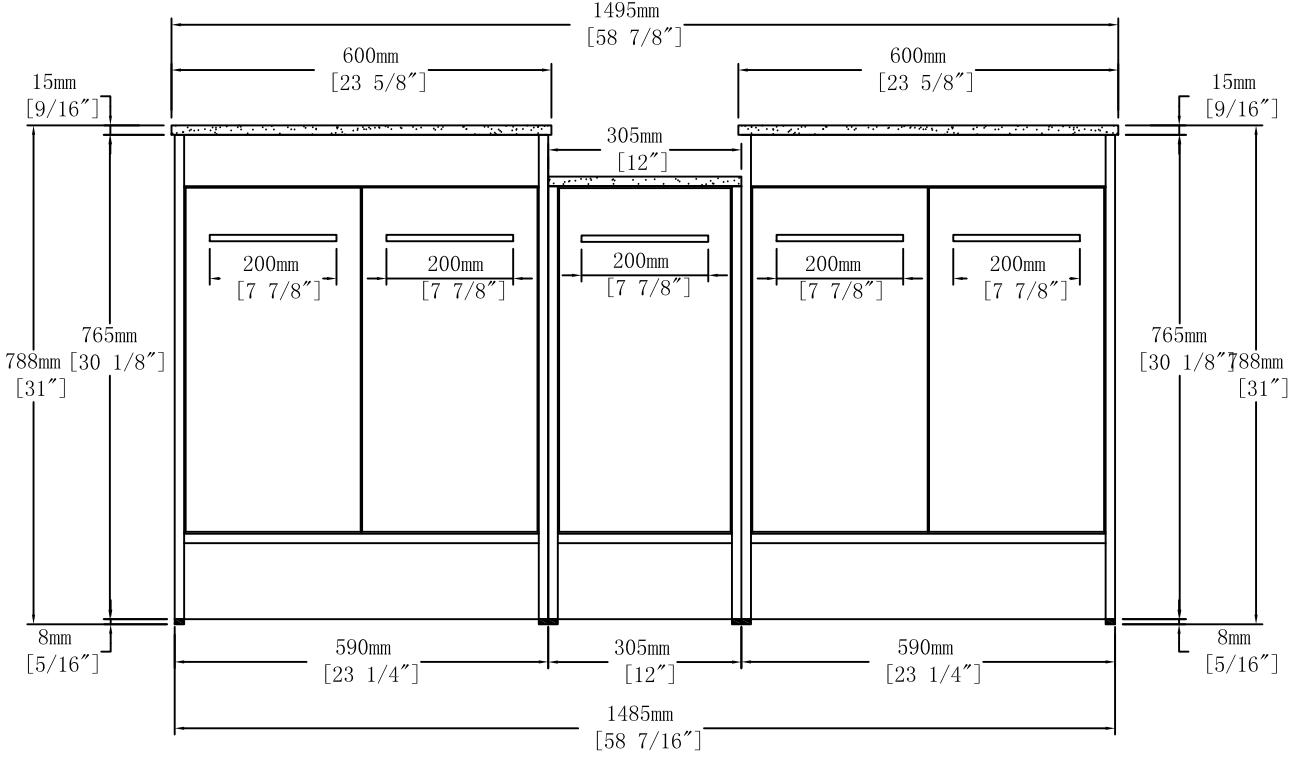
1495mm
[58 7/8″]
600mm
[23 5/8″]
600mm
[23 5/8″]
15mm
[9/16″]
15mm
[9/16″]
305mm
[12″]
200mm
[7 7/8″]
200mm
[7 7/8″]
200mm
[7 7/8″]
200mm
[7 7/8″]
200mm
[7 7/8″]
765mm
[30 1/8″]
788mm
[31″]
765mm
[30 1/8″]
788mm
[31″]
8mm
[5/16″]
8mm
[5/16″]
590mm
[23 1/4″]
305mm
[12″]
590mm
[23 1/4″]
1485mm
[58 7/16″]