WYNDHAM COLLECTION

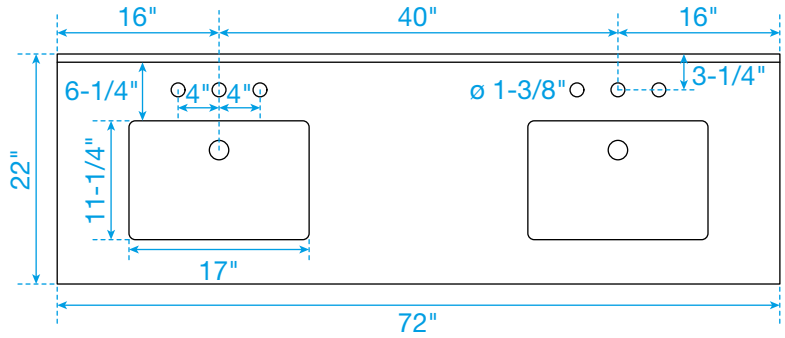

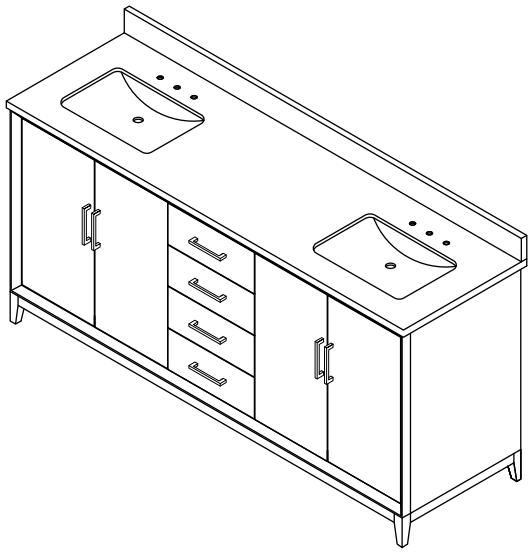

TOP VIEW OF VANITY CABINET

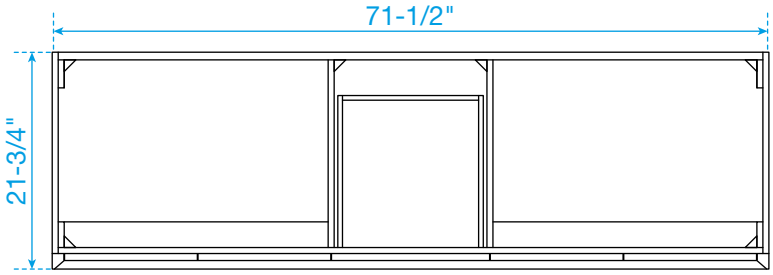

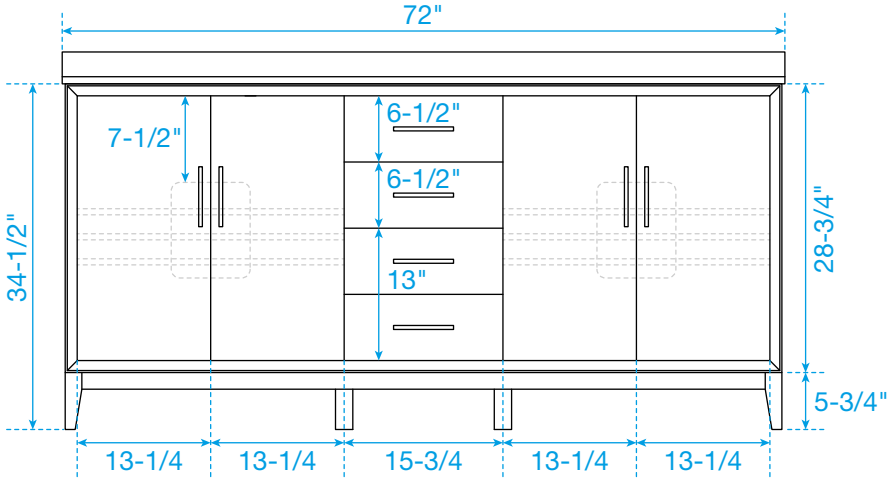

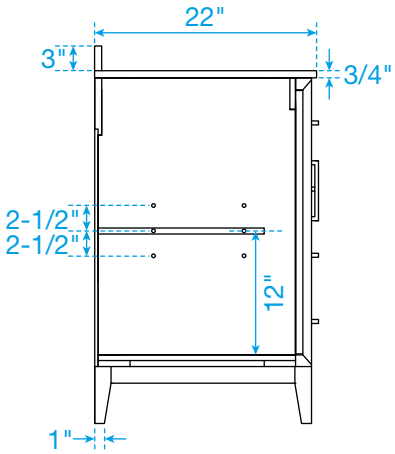

*Note: Due to high probability of breakage, the backsplash comes in two pieces, cut from the same piece. All measurements are ± 1/4".

WC-7575-72-DBL-VCA3

WYNDHAM COLLECTION

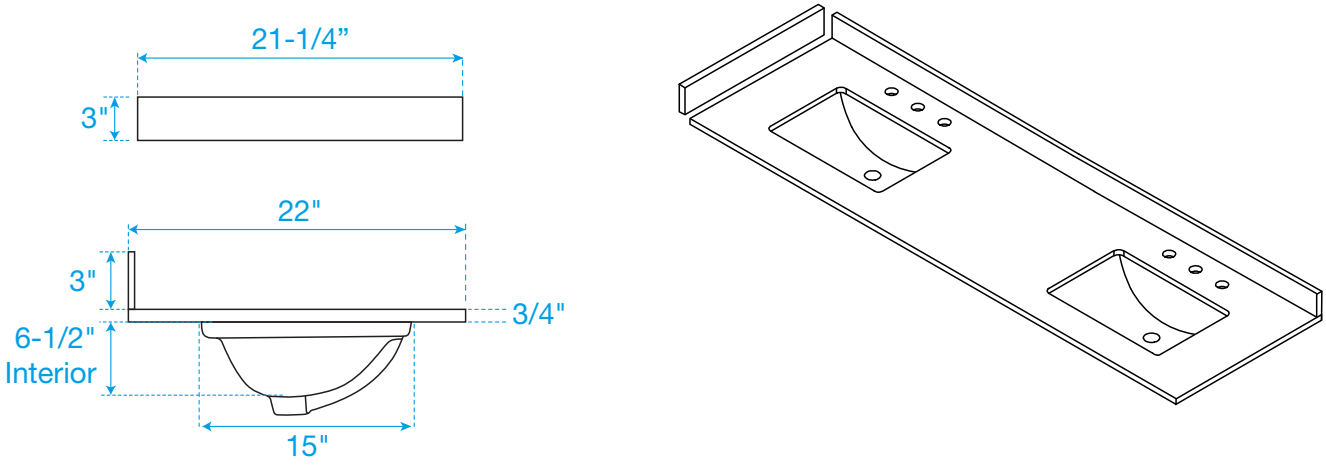

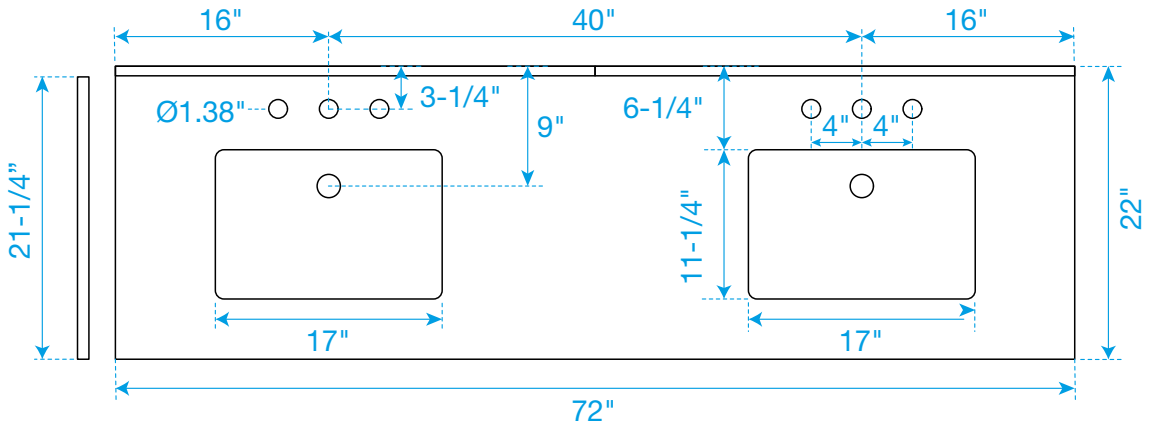

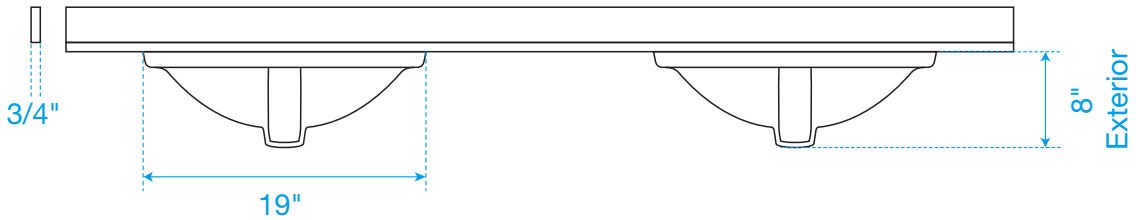

Side splash is reversible.
Note: Due to high probability of breakage, the backsplash comes in two pieces, cut from the same piece. All measurements are ± 1/4”.

WC-VCA3-72-DBL-TOP