ASSEMBLY INSTRUCTION

BENCH WITH HARD SEAT

42" L x 14" W x 18" H

Thank You for purchasing this Quality product. It has been engineered for easy assembly yet constructed for durability.Please take the time to read and follow the instruction while assembling.

Step 1

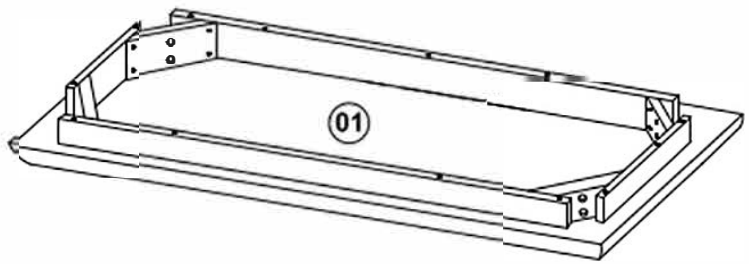

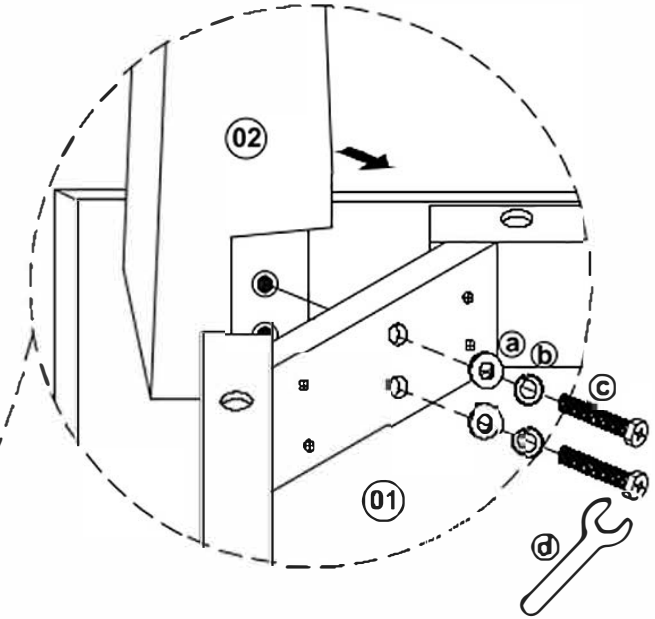

Step 2

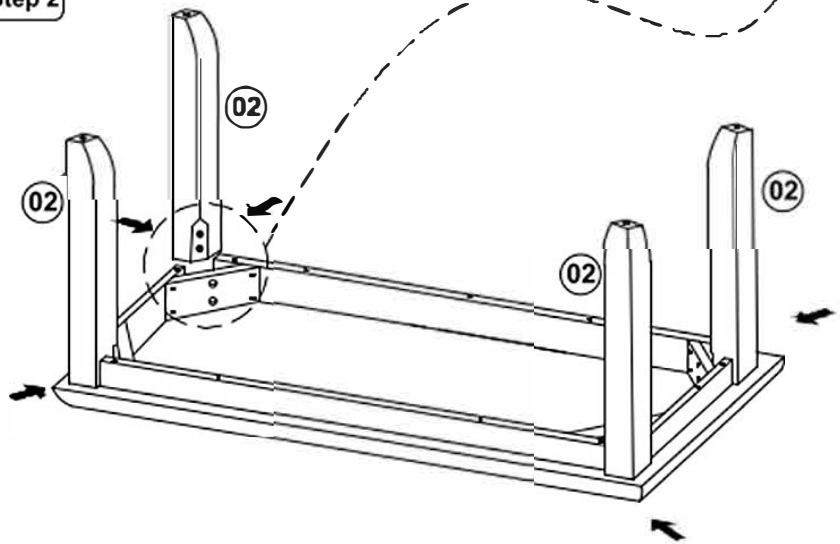

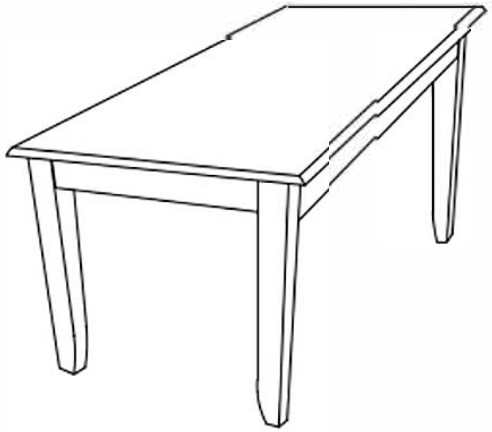

Assembly Completed !!..

List of Part For 1 Set

01		Table Top	1
02		Table Leg	4

List of hardware For 1 Set

a		Flat Washer $\frac{1}{4}$" x 18mm	8
b		Spring Washer $\frac{1}{4}$"	8
c		Hex Ovel Bolt M6 x 60mm	8
d		Spanner 10 mm	1

Important Notes

- Keep all hardware parts out of reach of children.
- Must tighten screws periodically.With use screws will become loose.Check tightness of all screws every 6-8 weeks.
- Do not tighten all screw / bolt until all completly assembled