A1	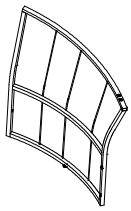	1
A2	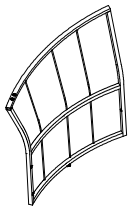	1
B1		1
B2	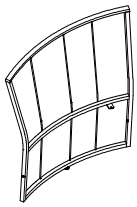	1
C	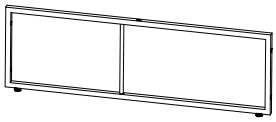	2
D		2
E		1
M	 M6*15	20
O	 M6*32	6
P	 M6*50	5
Q		36
R		5
S		3
T		4
W		1
X		1

Step 1

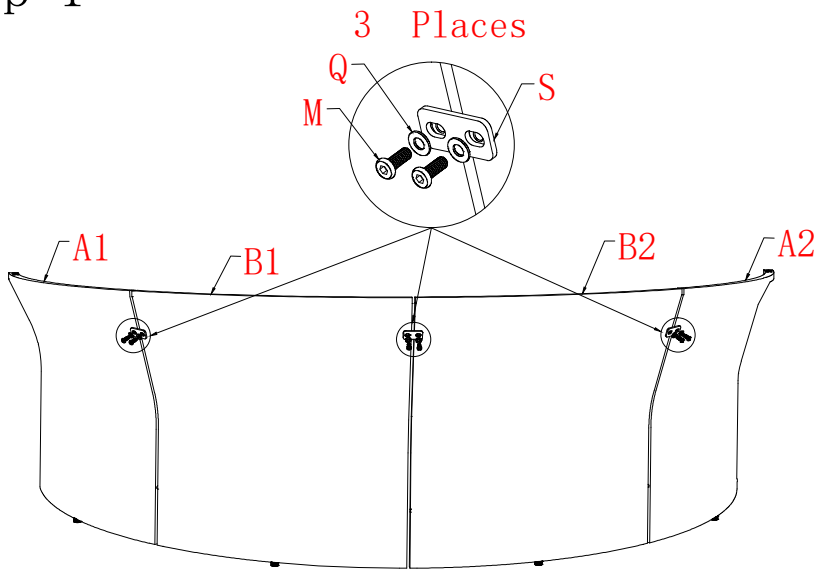

Step 2

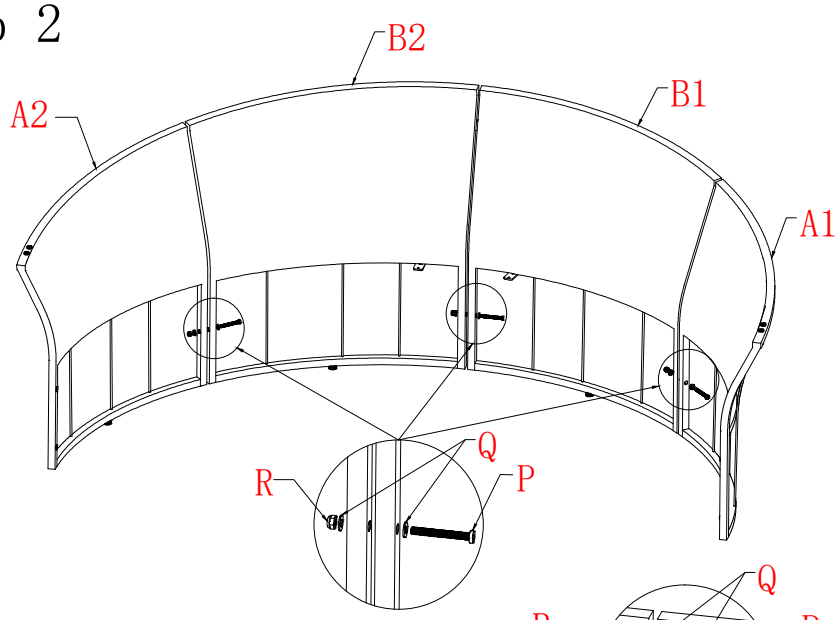

Step 3

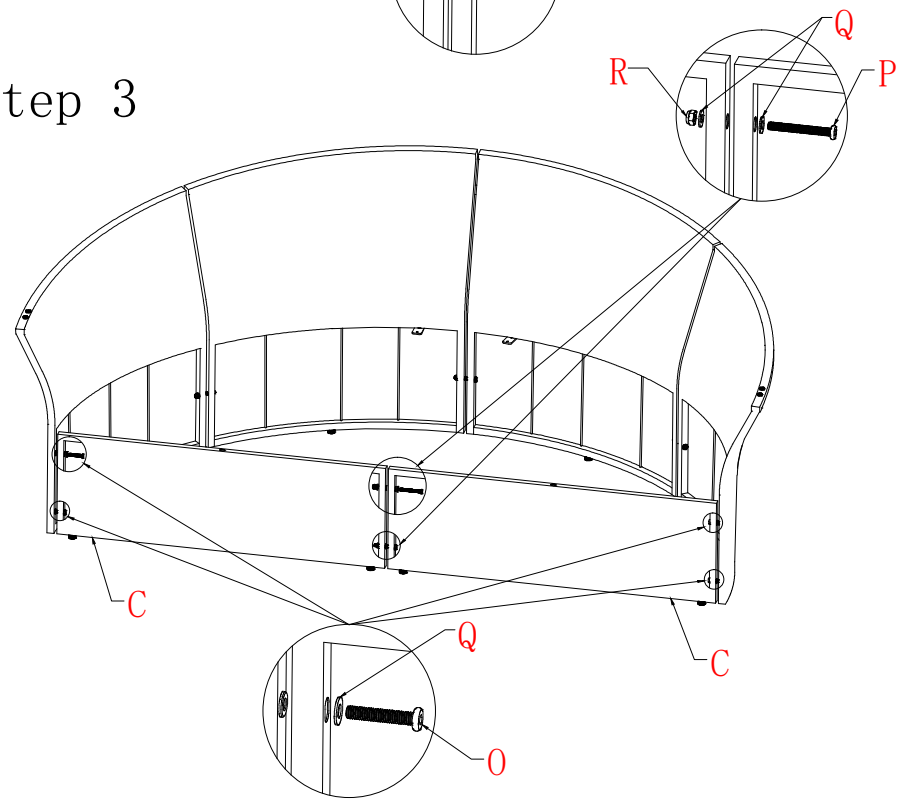

Step 3

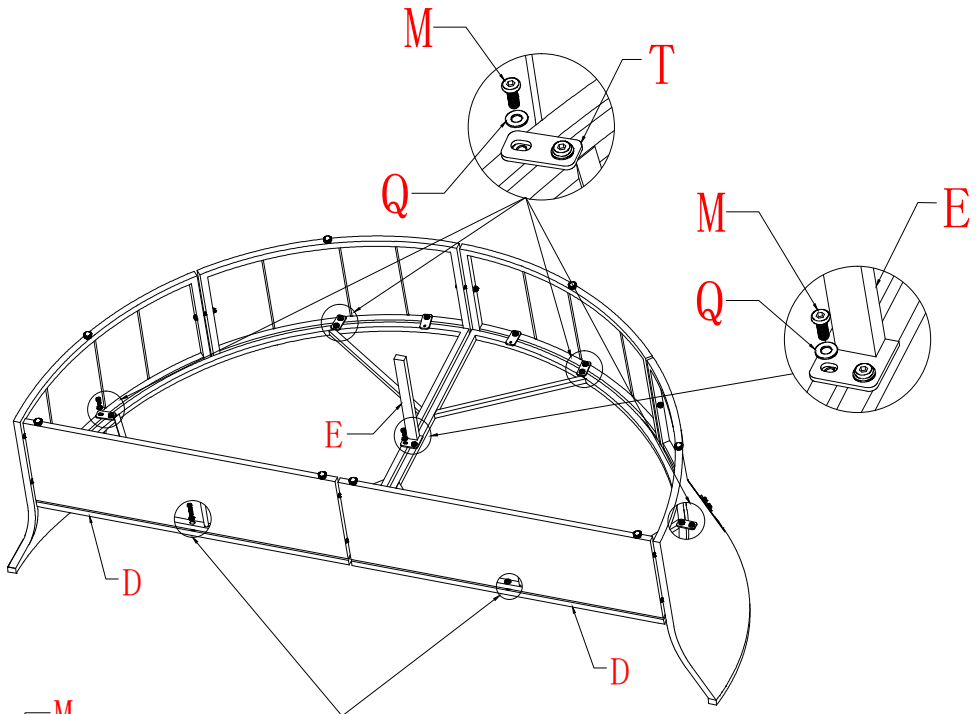

Step 4

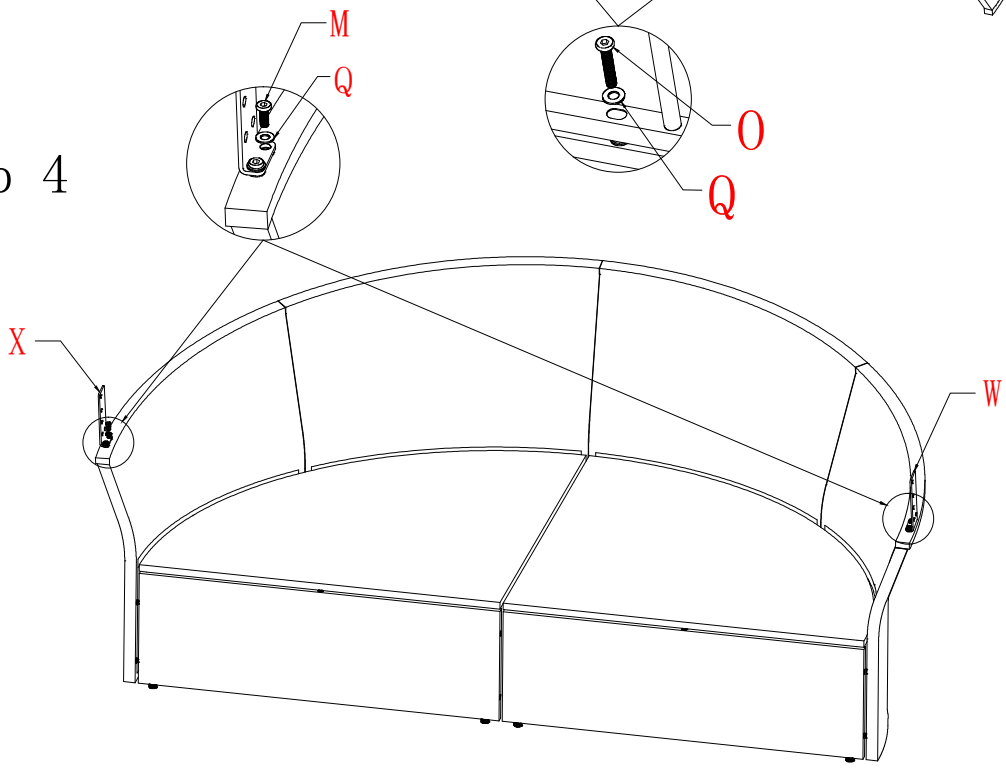

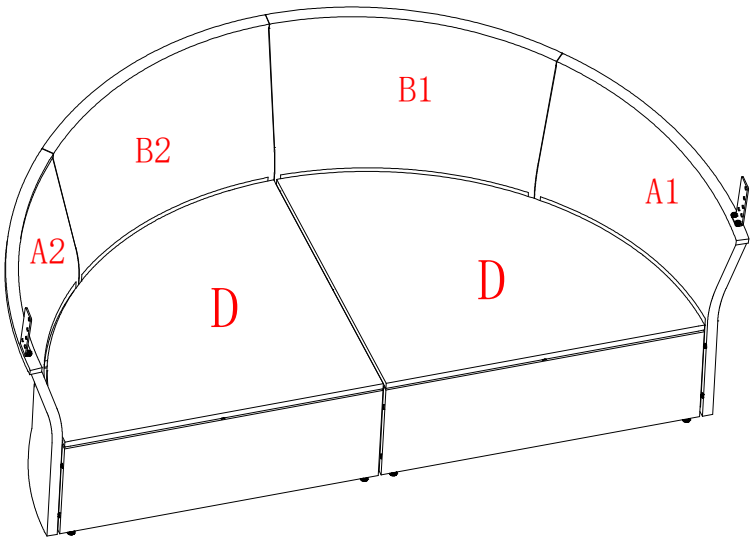

F		2
G		4
H		2
I		4
U		2
V1	 5mm	4
V2	 2mm	10
N	 M6*20	4
O	 M6*32	10
Q		24
R		10
1		10
2	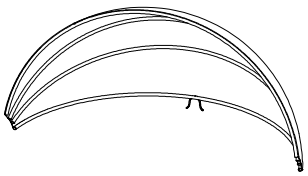	1

Step 1

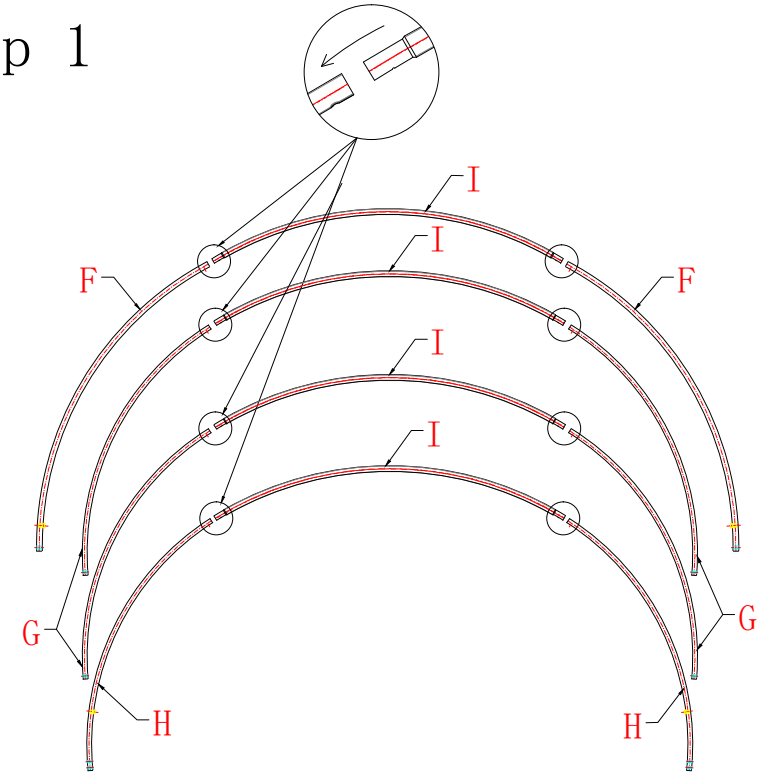

Step 2

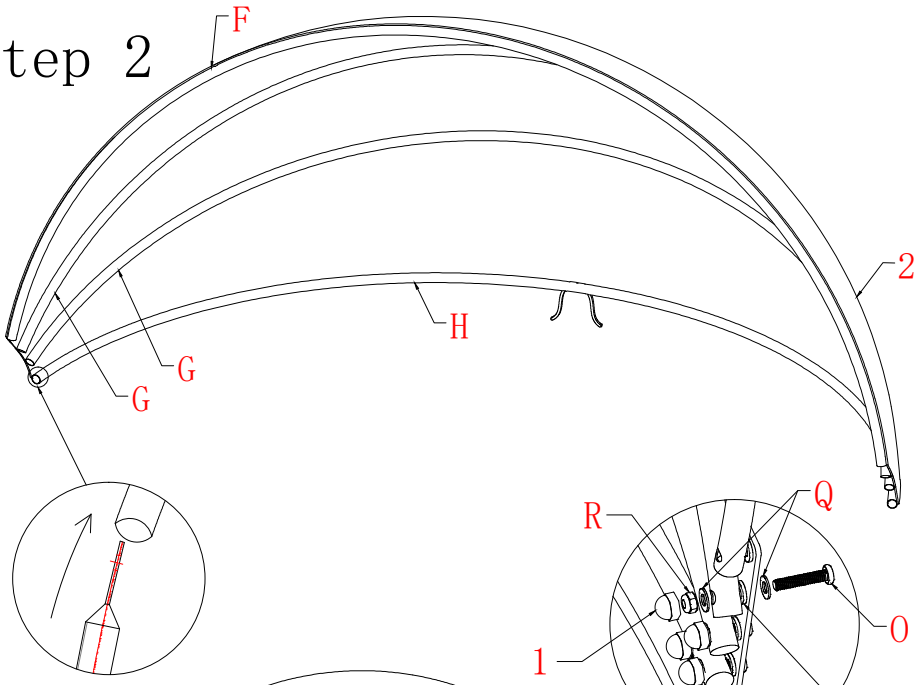

Step 3

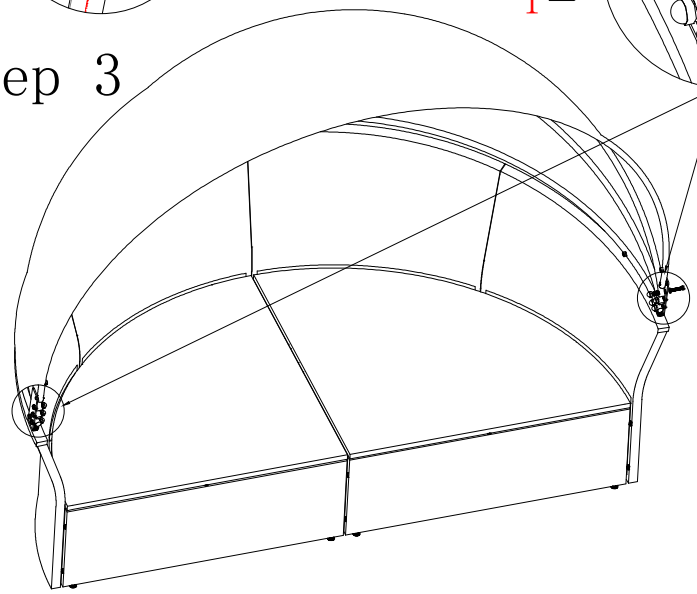

Step 4

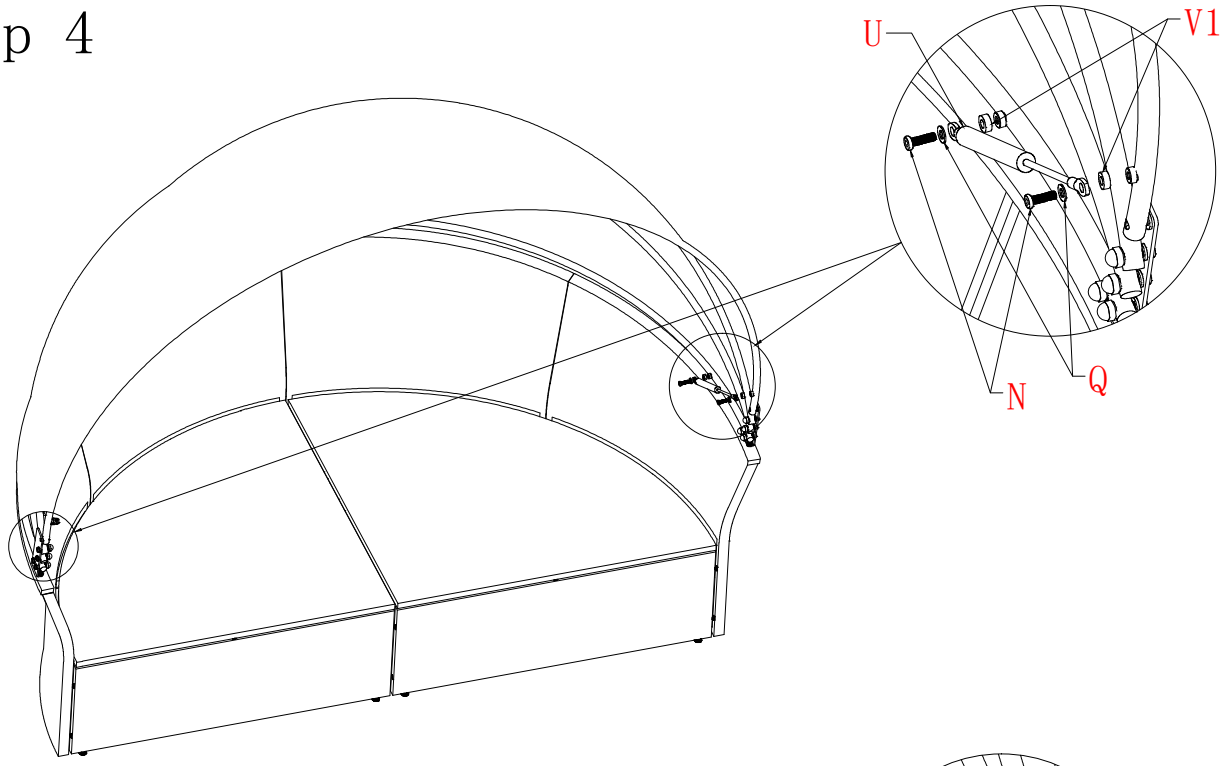

Step 5

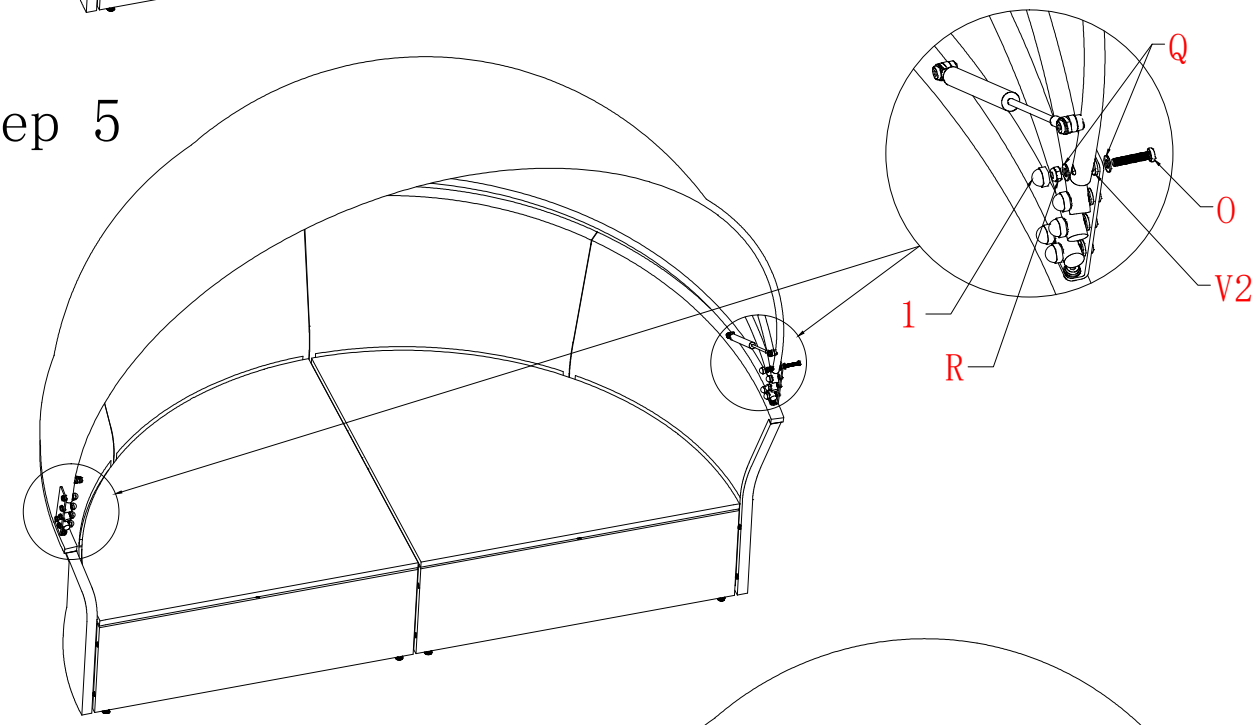

3	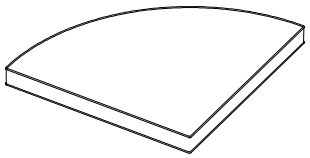	2
4	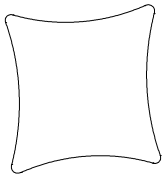	4

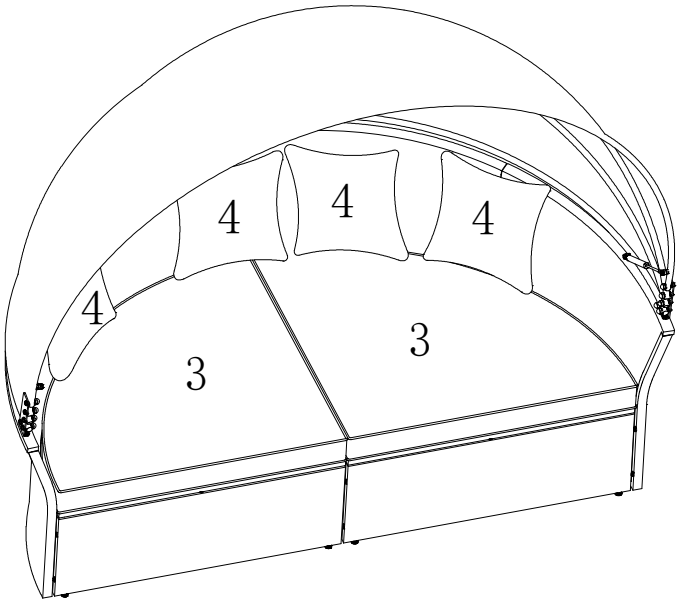

D		2
J	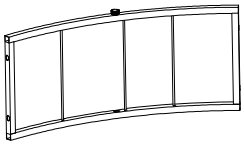	4
K	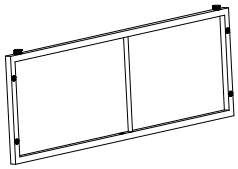	2
L	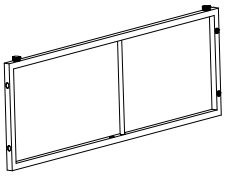	2
O	 M6*32	20
P	 M6*50	4
Q		28
R		4
Y		1
Z	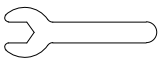	1
3	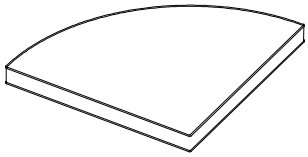	2

Step 1

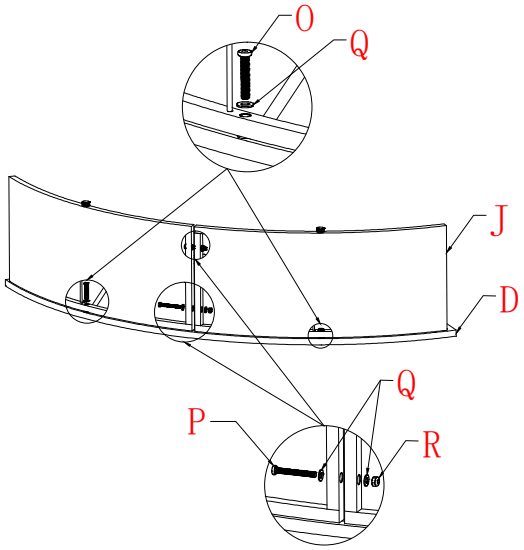

Step 2

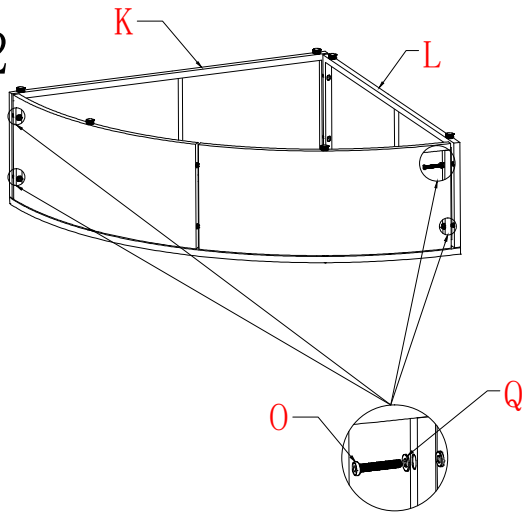

Step 3

