Installation & Assembly

① ②	① split light fixture ② screw	⑩	chain 1pcs
③ ④	④ carabiner hook screw connection ③ hanging tube	⑪ ⑫	⑪ canopy 1pcs ⑫ cap nut 2pcs
⑤	splicing connector 2pcs	⑮	cylinder tube
			X 1PCS
⑥ ⑦ ⑧ ⑨	⑥ metal ring ⑦ cover ⑧ hanging box ⑨ hanging ring		X 1PCS X 3PCS X 3PCS X 3PCS X 3PCS

Note: male A should connect with female A, male B should connect with female B (C with C, D with D).

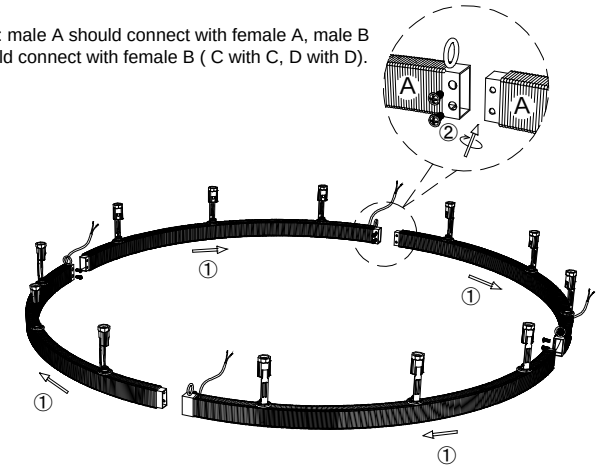

1.Combine the split light fixture together and fasten it with screw ②.

Note:The ring should be hanged by the tubes ③, not the wires, so please keep the wires loosen when make connection !!!

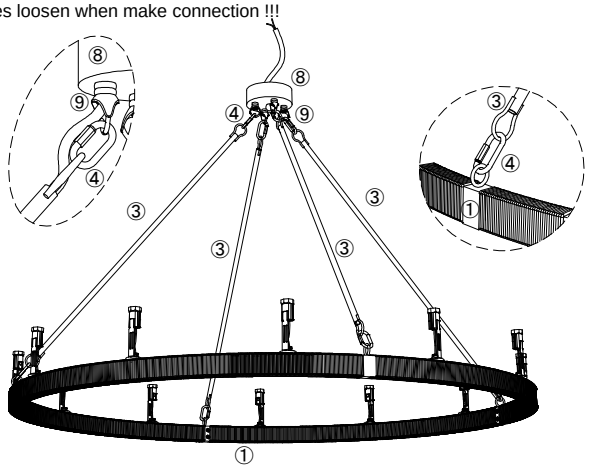

2.Let the wire go through the tube ③, hang the fixture to the box ⑧ with the carabiner hook screw connection ④ of hanging tube ③, let the wire go through the box ⑧.

1.Pull the orange operating handle A to open the inlet hole, insert the wire B.
2.Press the operating handle A to finish wiring.
(Note: one inlet hole can put 2 or 3 wires inside)

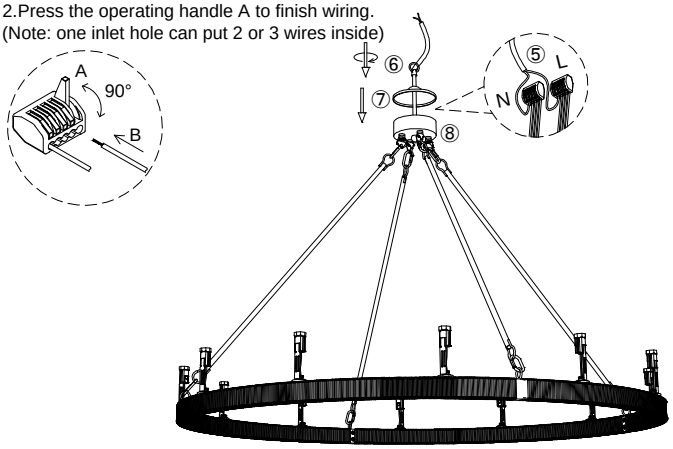

3.Connect all the wires by parallel with connectors ⑤(all live line-L use one connector, and neutral Line-N use another connector).
4.Let the wire go through the cover ⑦ and ring ⑥, rotate the ring ⑥ to close the cover ⑦ to the fixture.

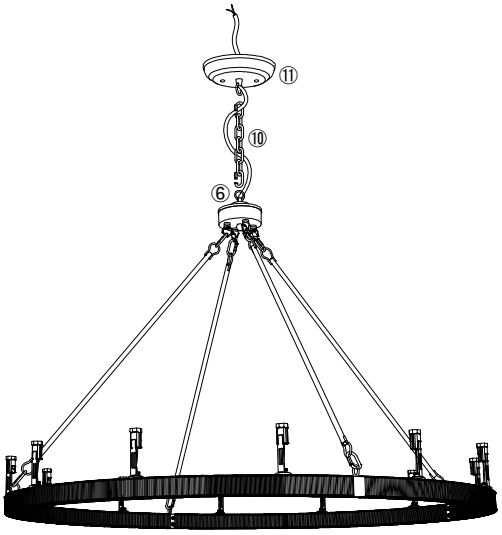

5.Hang the canopy ⑪ to the fixture with chain ⑩, let the wire go through the chain ⑩ and canopy ⑪.

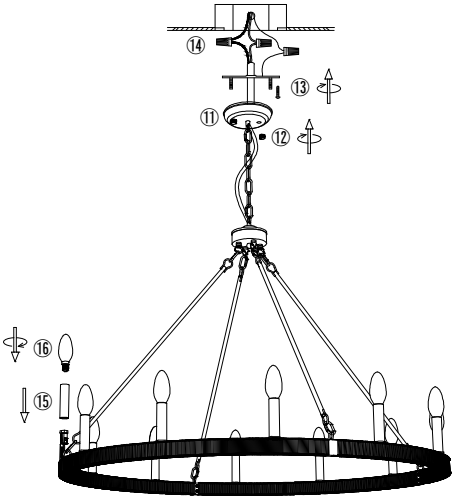

6.Install the bracket to the ceiling junction box with screw ⑬.
7.Connect the wire to your home line with cap connector ⑭.
8.Install the fixture to the bracket with cap nut ⑫.
9.Put the cylinder tube ⑮ on the bulb holder and install the bulb ⑯.

Please read carefully before installation!!!
Note : Please make sure that the electricity is powered off during installation !
Only a professional electrician should install this kind of product !