Instructions for Use

Up and down adjustment

Tilt adjustment

Thanks for purchasing our products. Please read this manual before assembly.
And please assemble in order. After the assembly, keep the instruction properly.
Make sure all the parts are concluded (14 kinds in total).

Accessories List

(1) Backrest	**(2) Seat Cushion**	**(3) 2 Armrests**	**(4) Mechanism**	**(5) Split Base Tube**
(6) Central Base Tube	**(7) Gas Lift**	**(8) 5 Castors**	**(9) 4 Screws (M6*25mm)**	**(10) 4 Screws (M6*35mm)**
(11) 4 Screws (M6*20mm)	**(12) 5 Screws (M6*20mm)**	**(13) 4 Flat Gaskets**	**(14) 2 Beveled Decorative Covers**	**(15) 2 Flat Decorative Covers**
(16) Allen Driver				

Notice

- This is a single chair, so please do not seat 2 or more persons, just seat only one person.
- Do not stand on the chair.
- Do not sit reverse or sit outside of the seat cushion.
- Check the screws once every 6 months, to make sure the screws are tight. Do not use the chair when the screws are loose.
- Please assemble according to the instructions.

Assembly Instruction

Please assemble in a wide and flat place.

Step 1

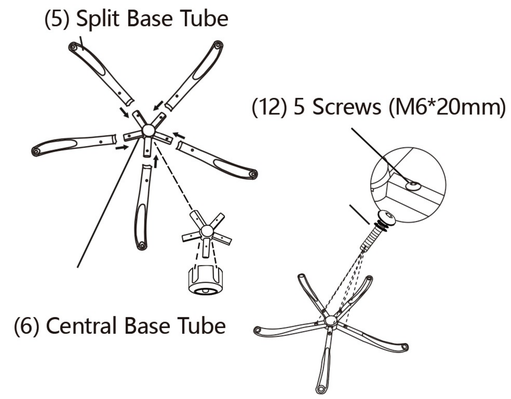

Step 2

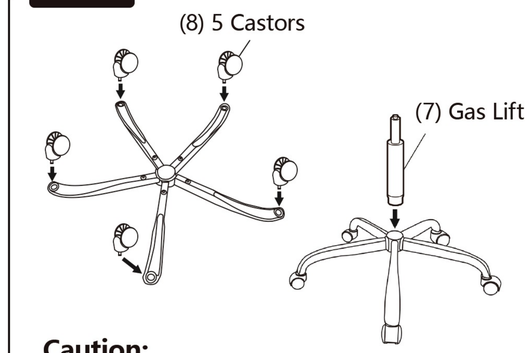

Caution:
Confirm (8)Castors must be inserted deeply.
(Press the castors in with more force)

Step 3

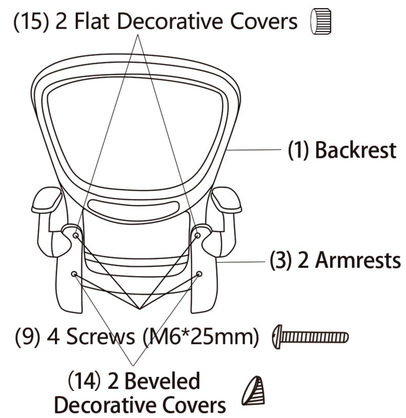

Step 4

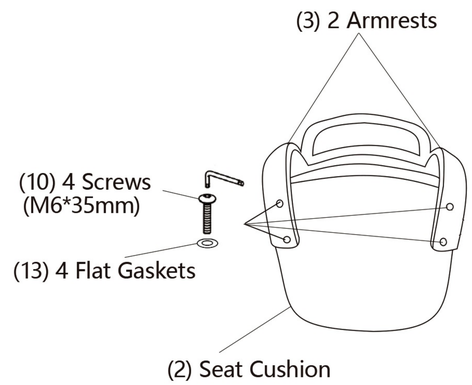

Step 5

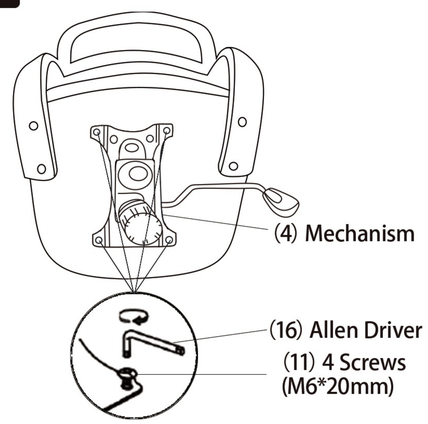

Step 6