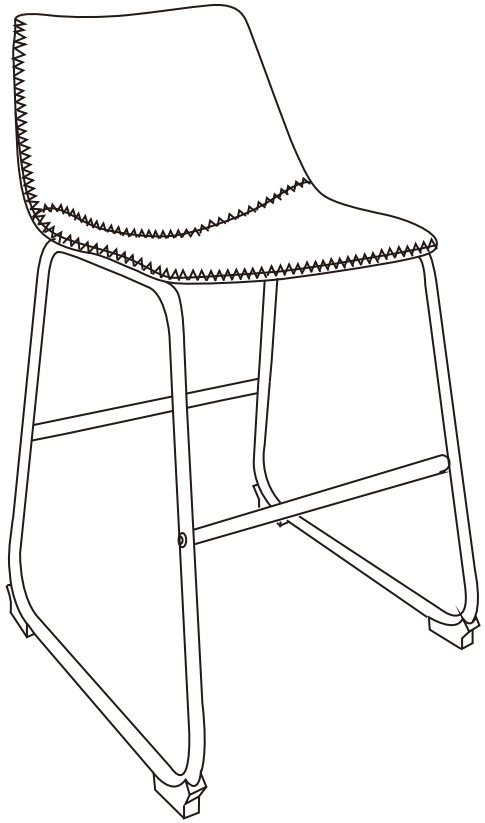

USDM3751

Installation Manual

Email:info.us@pasolux.com

General Guidelines

- Please read the following tips carefully and use the product correctly.
- If you buy the product for others, please keep these tips and send them to the receiver.
- In order for you to have a clear and summary preview, we have not described all possible scenarios and installation details that may be involved. If you need more information and help, please contact us.

Notes

- Please check if all the parts are complete and in good condition according to the instructions before installation. If not, please do not set it up, but contact us as soon as possible.
- To protect your floor from scratches, please install the product on a soft surface, such as carpet.
- This product is only for sitting, please do not use it as a ladder by stepping on the seat.
- Align the holes and screws perfectly before assembly. After assembly and before final tightening the screws, please press on the seat and make sure the chair is not shaky.
- This product is designed for indoor use only, and only one person is allowed to sit on the chair at one time.
- Please use the chair on an even floor and make sure that all the legs are on the floor when using and do not sit on the edge of the chair to avoid tilting.
- Please do not expose the product to strong sunlight, and keep away from sharp objects to avoid damage.

- Please make sure that all the parts are fixed well before use. If any parts become loose in use, please fasten them again. If any wobbling or noise occurs during use, please retighten the screws to 100%.
- Please wipe the PU seat with soft damp cloth and mild cleaner, while clean the linen or velvet seat with dry sponge and mild cleaner.
- The weight capacity for this product is up to 150kg.
- It is normal for the velvet chair surface you receive to have colour differences, since velvet will show different colours when stroked from different directions. In order to achieve a better visual effect, please smooth the velvet surface in the same direction.

Warnings

- Please keep children away during installation to avoid accidental swallowing of tiny accessories.
- After installation, please keep the packaging materials out of reach of children, especially babies to prevent unforeseen hazards such as suffoca-tion caused by the non-woven fabrics, plastic bags, bubble bags, etc.contained in the packaging.

Customer Service

- If any questions, please contact our customer service team through the corresponding purchase platform.

Part list

UNIT:MM

1 x1

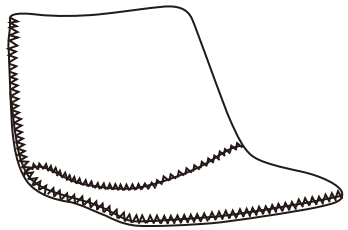

2 x1

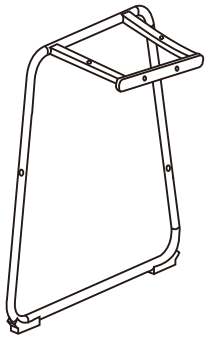

3 x1

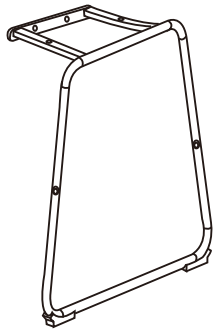

4 x2

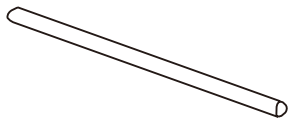

Hardware list

UNIT:MM

A x2

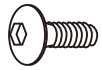

M8x14mm

B x4

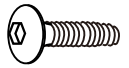

M6x22mm

C x4



M6x18x1.2mm

D x4



M6x30mm

E x1



M6

Assembly Steps

step 1

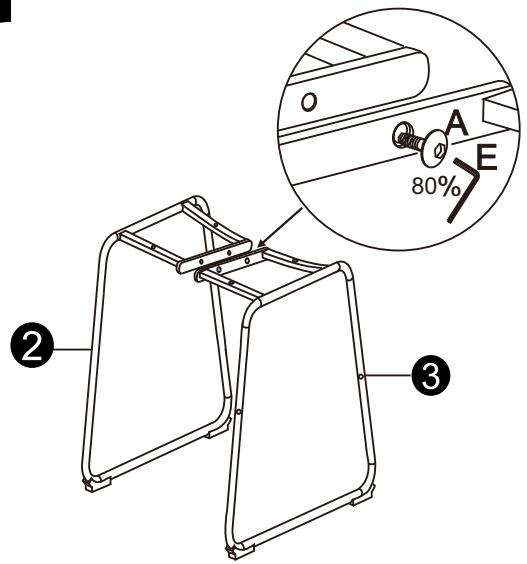

❷ x1
❸ x1
A x2
E x1
1

step 2

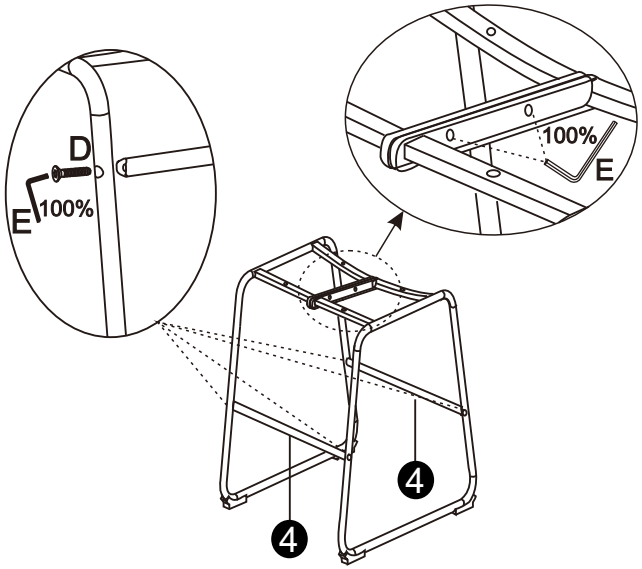

❹ x2
D x4
E x1
2

step 3

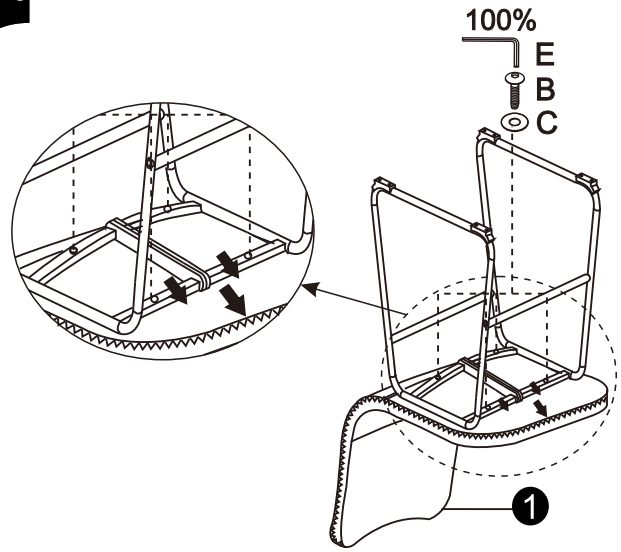

❶ x1
B x4
C x4
E x1
3

step 4

