Instruction manual

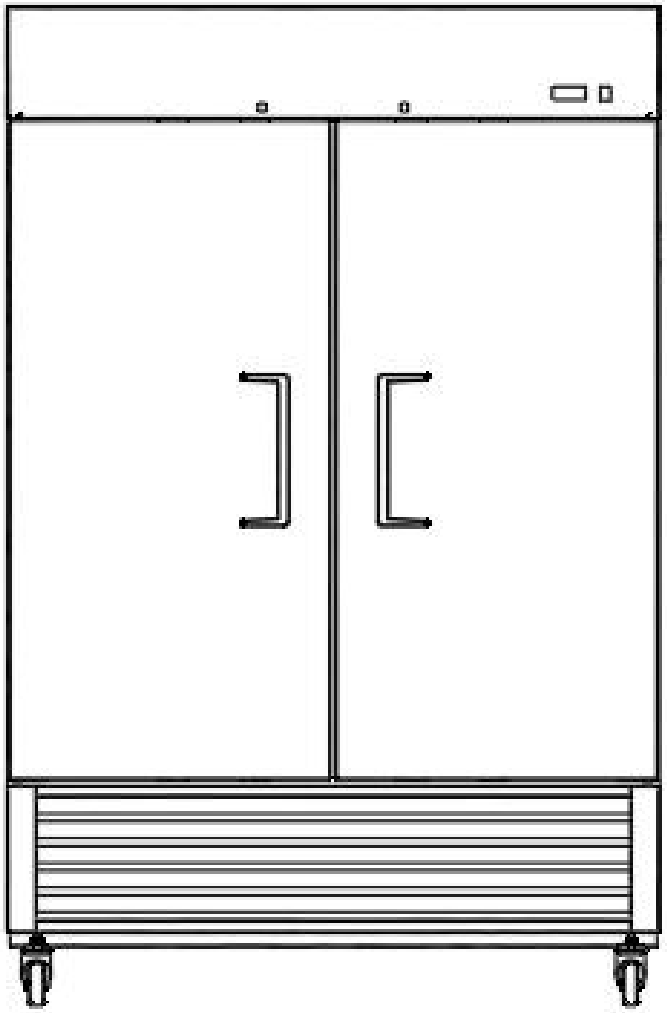

Refrigerator：ST27BR　ST54BR

Freezer：ST27BF　ST54BF

Glass Door Refrigerator:ST27BRG ST54BRG

ETL

Table of contents

Safety Tips..... 3
Important Safety Instruction..... 4
Dimensions..... 5
Technical informtion..... 5
Intended Use..... 6
Component information..... 6
Location and Installation..... 7
Power Requirements..... 8
Troubleshooting..... 8
Disposal..... 9
OPERATION..... 10
1.FRONT PANEL COMMANDS..... 10
2.MAIN FUNCTIONS..... 11
WIRING DIAGRAMS..... 13
Parts..... 14
Environmental Protection..... 15

Safety Tips

- The appliance is intended for commercial use or similar use (etc. to be used by a layman in shops).
- DO NOT use the appliance outside.
- DO NOT attempt to service the item yourself.
- DO NOT use damaged appliances. If you are in any doubt, consult service agent.
- DO NOT use electrical appliances inside the appliance(e.g.heaters, ice-cream makers etc.unless they are of the type recommended by the manufacturer.
- Keep ventilation openings, in the appliance enclosure or in the built-in structure, clear of obstruction.
- DO NOT use mechanical devices or other means to accelerate the defrosting process, other than those recommended by the manufacturer.
- DO NOT damage the refrigerant circuit.
- DO NOT allow oil or fat to come into contact with the plastic components or door seal.Clean immediately if contact occurs.
- DO NOT place combustible, explosive or volatile articles, corrosive acids or alkalis or liquids in the appliance.
- DO NOT use this appliance to store medical supplies.
- DO NOT use jet/pressure washers to clean the appliance.
- DO NOT allow children to play with the packaging, and destroy plastic bags safely.
- Bottles that contain a high percentage of alcohol must be sealed and placed vertically in the refrigerator.
- Always carry, store and handle the appliance in a vertical orientation and move by holding the base of the appliance.
- Always switch off and disconnect the power supply to the unit before cleaning.
- If the supply cord is damaged, it must be replaced by the manufacturer, its service agent or similarly qualified persons in order to avoid a hazard.
- This appliance is not intended for use by persons (including children) with reduced physical,sensory or mental capabilities, or lack of experience and knowledge, unless they have been given supervision or instruction concerning use of the appliance by a person responsible for their safety.
- Children should be supervised to ensure that they do not play with the appliance.
- For indoor used only. Not suitable for installation in an area where a water jet could be used.Must not be cleaned by a water jet.
- To guarantee safe operation, ensure that the appliance is set up and connected as described in the instruction manual.
- Any repairs and work on the appliance should only be carried out by the customer service department.
- The key to the fridge/freezer should be kept out of the reach of children and users.

Important Safety Instruction

DANGER — Risk Of Fire Or Explosion. Flammable Refrigerant Used. To Be Repaired Only By Trained Service Personnel.Do Not Puncture Refrigerant Tubing.

CAUTION — Risk Of Fire Or Explosion. Flammable Refrigerant Used.Consult Repair Manual/Owner's Guide Before Attempting To install or Service This Product.All Safety Precautions Must be Followed.

CAUTION - Risk Of Fire Or Explosion. Dispose Of Properly in Accordance With Federal Or Local Regulations.Flammable Refrigerant Used.

Caution -Risk of Fire or Explosion due to Flammable Refrigerant Used. Follow Handling Instructions Carefully in Compliance with Local Government Regulations.

DANGER- Risk Of Fire or Explosion. Flammable Refrigerant Used. Do Not Use Mechanical Devices To Defrost Refrigerator. Do Not Puncture Refrigerant Tubing.

CAUTION-Flammable refrigerant used！ When handing, moving and use of the refrigerator, make sure to avoid either damaging the refrigerant tubing, or increasing the risk of a leak.

Component parts shall be replaced with like components and that servicing shall be done by factory authorized service personnel, so as to minimize the risk of possible ignition due to incorrect parts or improper service.

The appliance is not for the display of potentially hazardous foods.

The equipment is intended for use in an area where the environmental conditions are controlled and maintained so that the ambient temperature typically does not exceed 90° F(32° C).

DIMENSIONS

MODEL:ST27BR ST27BF

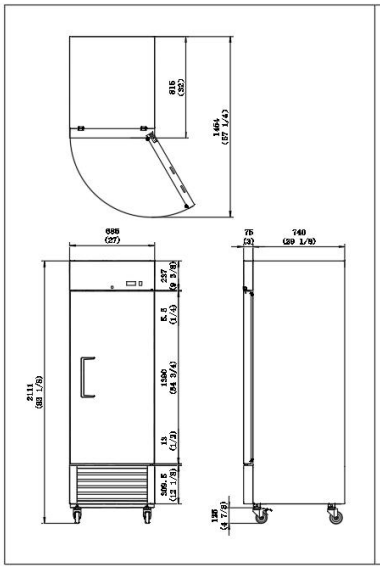

MODEL:ST54BR ST54BF

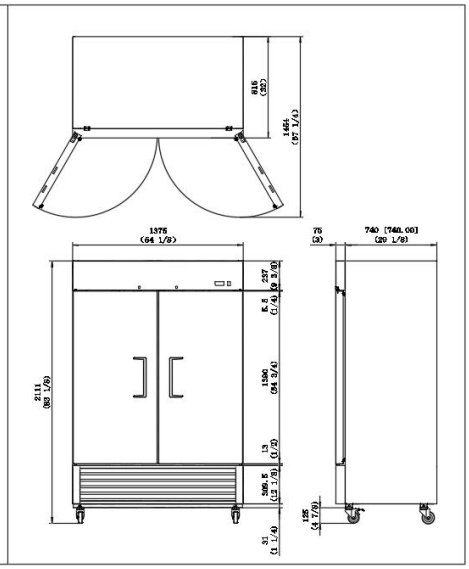

MODEL:ST27BRG

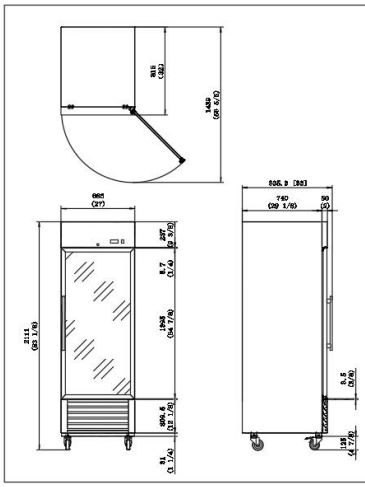

MODEL:ST54BRG

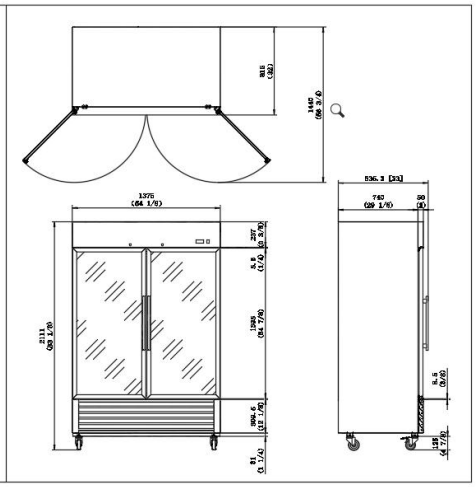

TECHNICAL INFORMATION

model	Supply voltage (V/Hz)	Rated current(A)	Temp. Range(℉)	Capacity	Dimension (W*D*H) (in)
ST27BR	115/60	3.5	33°F ~40°F	21	27*32*83.1
ST27BF	115/60	5	-8°F ~1°F	21	27*32*83.1
ST54BR	115/60	4.6	33°F ~40°F	47	54.1*32*83.1
ST54BF	115/60	7.1	-8°F ~1°F	47	54.1*32*83.1
ST27BRG	115/60	3.5	33°F ~40°F	21	27*32*83.1
ST54BRG	115/60	4.6	33°F ~40°F	47	54.1*32*83.1

Intended Use

Only use this appliance for cooling and storage of food and beverage for commercial purposes.

COMPONENT INFORMATION

MODEL:ST27BR ST27BF

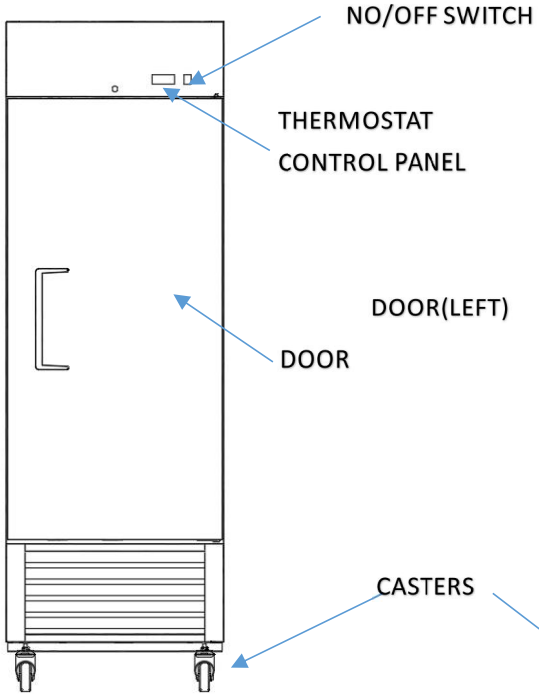

MODEL:ST54BR ST54BF

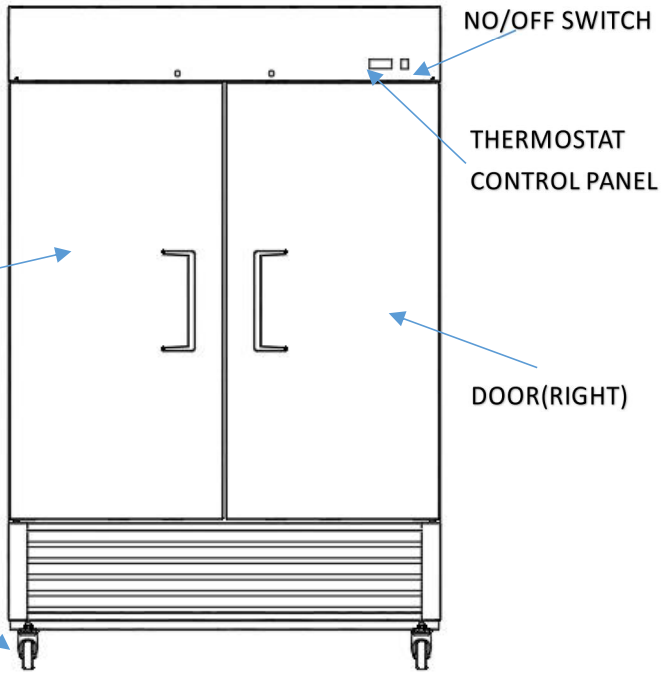

MODEL:ST27BRG

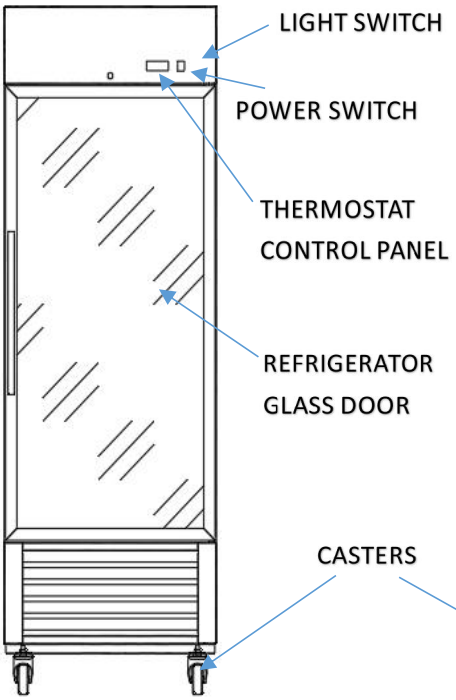

MODEL:ST54BRG

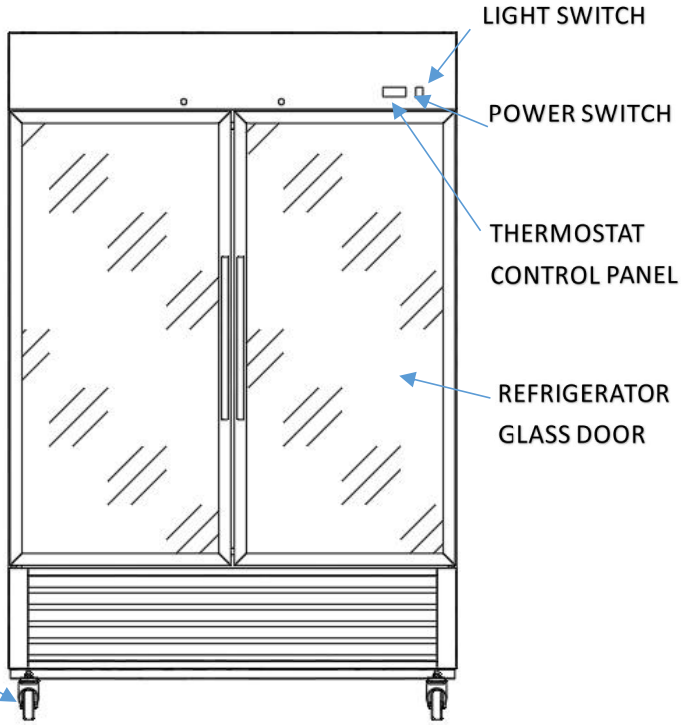

Location and Installation

The cabinet should be placed in a room that is dry and sufficiently ventilated.To operate efficiently it should not be positioned in direct sunlight or near warm appliances.Please note that optimal cabinet performance is obtained at an ambient temperature between 60.8℉ and 95 ℉.

Freezer,Refrigerator: By placing the cabinet in an environment with high air humidity, it may be necessary to acquire extra equipment for evaporation of the drip water in the pan near the compressor.

The cabinet can be installed freestanding against a wall.

Important

The cabinet must have sufficient ventilation and free air circulation beneath, above and behind the cabinet. The legs under the cabinet will help ensure sufficient air space.

- Remove the appliance from the packaging.Make sure that all protective plastic film and coatings are thoroughly removed from all surfaces.To prevent injury or damage to the unit, we recommend that the appliance should be unpacked and set up by two people.
- The appliance should be placed on a solid level floor to reduce noise and vibration.Level the appliance by adjusting the screw feet,
- Check that the power supply and voltage used comply with the details on the rating plate.The plug must be accessible after installation
- Correctly connect and disconnect the plug. When inserting ensure the plug is fully engaged. When unplugging do so by holding the body of the plug. Never pull the supply cord directly.
- If the appliance is to be shut down for long period, switch it off and disconnect the plug from socket outlet. Clean the appliance and leave the door open to prevent odour.
- Important！ For your personal safety, this appliance must be properly grounded (earthed). This appliance is equipped with a cord having a grounding wire with a grounding plug.The plug must be inserted into an outlet that is properly grounded and installed.Consult a qualified electrician or service center if you do not completely understand the grounding instructions. If doubt exits as to whether the appliance is properly grounded, have a qualified electrician check the circuit to make sure the outlet is properly grounded.
- If the cable does not reach the nearest socket, either rearrange your store layout or ask a qualified electrician to fix a new socket.
- If power is cut off, wait for at least 3 minutes before restarting the appliance to avoid damaging the compressor.

Note:If the unit has not been stored or moved in an upright position, let it stand upright for approximately 12 hours before operation.

Note: Before using the appliance for the first time, clean the shelves and interior with soapy water.

Power Requirements

The cabinet is intended for connection to an alternating current. The connection voltage (V) and frequency (Hz) are shown on the nameplate in the cabinet .The power connection is made using a three-pin plug to a wall socket.Any requirement for earthing from the local power supply must be met.The cabinet plug and wall socket should then give a correct earthing. If you are in doubt, contact your local supplier or authorized electrician.

Warning - This appliance must be earthed

The flexible cord fitted to this appliance has three cores for use with a 3-pin 13 Amp plug.If a B.B.1363(13 Amp) fused plug is used, it should be fitted with a 13 Amp fuse or a mould-ed right-angled Schuko plug. Note the plate with a hole in it between and above the two pins - this connects to French and Belgian sockets, which have an earth pin that sticks out.Running in a slot coming from that plate is a continuation strip from the plate. Other European countries use a socket with a scrolled metal connector emerging from the side which mates with that strip. This ensures that the Schuko can be used in most mainland European countries.

Important

The wires in this mains lead are coloured in accordance with the following code:

Green-and-yellow: earth

Blue: neutral

Brown: live

The colours of the wires in the mains lead of this appliance might not correspond with the coloured markings identifying the terminals in your plug. Proceed as follows;

The wire which is coloured green-and-yellow must be connected to the terminal in the plug which is marked "E", marked by the earth symbol or coloured green-and-yellow. The wire, which is coloured blue , must be connected to the terminal, which is marked with the letter “N” , or coloured black. the wire which is coloured brown must be connected to the terminal which is marked with the letter "L " or coloured red.

Troubleshooting

If your Refrigerator, Freezer appliance develop a fault, please check the following table.

Fault	Probable Cause	Action
The appliance is not working	The unit is not switched on	Check that the unit is plugged incorrectly and switched on
	Plug and/or lead are damaged	Call our agent or qualified technician
	Power supply	Check power supply
	Internal wiring fault	Call our agent or qualified

		technician
The appliance turns on, but the temperature is too high/low	Too much ice on the evaporator	Defrost the appliance
	Condenser blocked with dust	Clean the condenser thoroughly
	The door is not shut properly	Check that the door is shut and seals are not damaged
	Appliance is located near a heat source, or air flow to the condenser is blocked	Move the refrigerator to a more suitable location
	Ambient temperature is too high	Increase ventilation or move appliance to a cooler position
	Unsuitable foodstuffs are being stored in the appliance	Remove any excessive hot foodstuffs or blockages to the fan
	Appliance is overloaded	Reduce the amount of food stored in the appliance
The appliance is leaking water (Refrigerator)	The appliance is not properly levelld	Adjust the screw feet to level the appliance
	The discharge outlet is blocked	Clear the discharge outlet
	The water container is damaged	Call our agent or qualified technician
The appliance is unusually loud	Loose nut /screw	Check and tighten all nuts and screws
	The appliance has not been installed in a level or stable position	Check installation position and change if necessary

Disposal

If the cabinet i no longer of use and you wish to dispose of it,please do so in an environmentally correct way. There may be special requirements or conditions.You can obtain information on the disposal of refrigeration appliances from:

- Your supplier
- Government authorities (The local council, Ministry of the Environment, etc.)

This equipment is intended for the storage and display of packaged products only

OPERATION

Display and functions

During normal operation, the controller displays the ambient temperature. In addition, the display has LEDs that indicate the activation of the control functions (see Table 1), while the 3 buttons can be used to activate/deactivate some of the functions (see Table 2).

LEDs and associated functions

1. FRONT PANEL COMMANDS

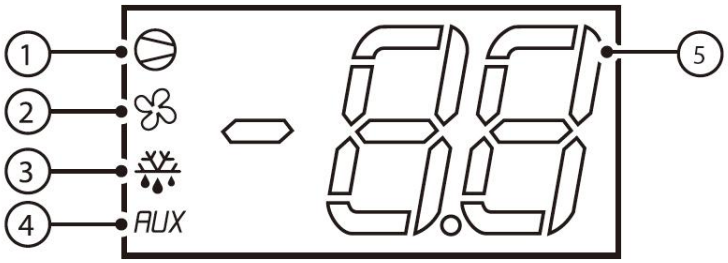

index	function	normal operation			Start up
		ON	OFF	blink	
1	compressor	on	off	request	on
2	fan	on	off	request	on
3	defrost	on	off	request	on
4	aux	output on	output off	-	on
5	digit	2 digit LED display with sign (-99 to 99) and decimal point			

Table.1

Table of functions activated by the buttons

button	normal operation		start up	
	pressing the button alone	pressed together		
	more than 3 s: toggle ON/OFF	pressed together display defrost probe temp.	-	
	more than 3 s: start/stop defrost		Pressed together start parameter reset procedure	For 1 s: display firmware vers. code
	1 s: display/set the set point More than 3 s: access parameter setting menu(enter password '22')	-		

Table.2

Fixed settings

- Minimum compressor ON time is 1 minute;
- If there is no defrost relay, the compressor will be shut down for defrost;
- Freeze the display when defrost, it returns when the temperature reaches the set point;
- Alarm is bypassed 1 hour after defrost;

Setting the set point (desired temperature)

- press for 1 s, the set value will start flashing after a few moments;
- increase or decrease the value using or ;
- press to confirm the new value.

Switching the device ON/OFF

press for more than 3 s. The control and defrost algorithms are now disabled and the instrument displays the message"OFF" alternating with the temperature read by the set probe.

Manual defrost (only for models C/Y)

press down for DOWN more than 3 s (the defrost starts only the temperature conditions are valid).

Show defrost probe temperture(only for models C/Y)

press and together.

Access and setting type F (frequent) and type C (configuration) parameters

- press for 3 s (the display will show "PS");
- to access the type F and C parameter menu, enter the password "22" using / ;
- to access the F parameter menu only, press (without entering the password);
- scroll inside the parameter menu using / .

To display/set the values of the parameter displayed, press , then / and finally to confirm the changes (returning to the parameter menu).
To save all the new values and exit the parameter menu, press for 3 s;
To exit the menu without saving the changed values (exit by timeout) do not press any button for at least 60 s.

Display and functions

During normal operation, the controller displays the ambient temperature. In addition, the display has LEDs that indicate the activation of the control functions (see Table 1), while the 3 buttons can be used to activate/deactivate some of the functions (see Table 2).

Table of alarms

Alarm code		LED	Description	Parameters involved
E0		ON	probe 1 error = control	-
E1(*)		ON	probe 2 error = defrost	[d0 = 0 / 1]
dr(*)		ON	open door alarm	
Lo		ON	low temperature alarm	[AL] [Ad][A0]
HI		ON	high temperature alarm	[AH] [Ad][A0]
EE		ON	unit parameter error	-
EF		ON	operating parameter error	

WIRING DIAGRAMS

MODEL:ST27BR ST54BR

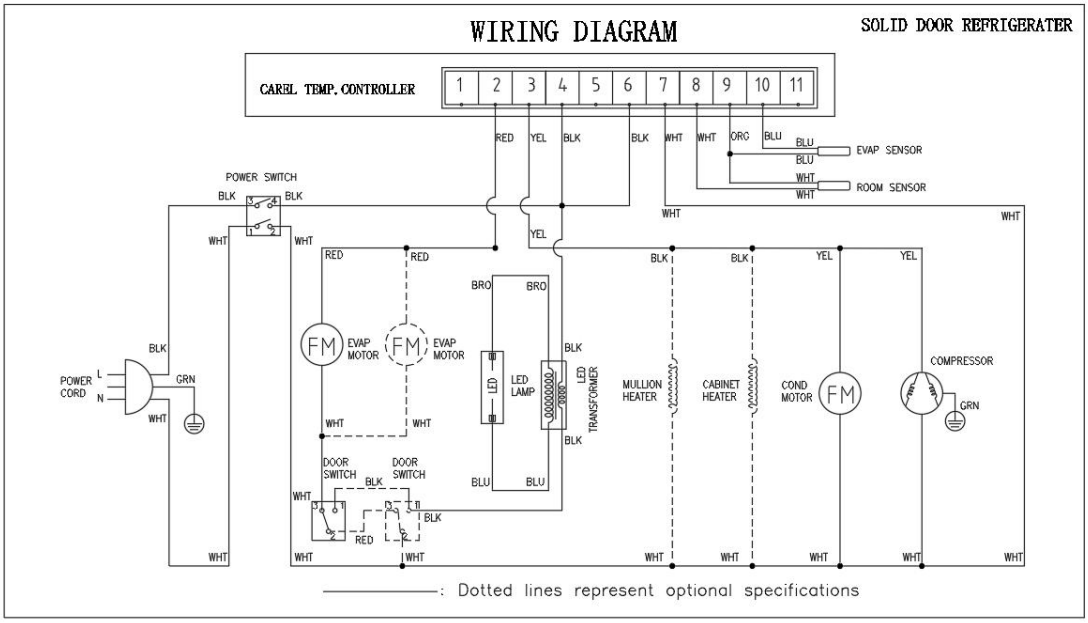

MODEL:ST27BF ST54BF

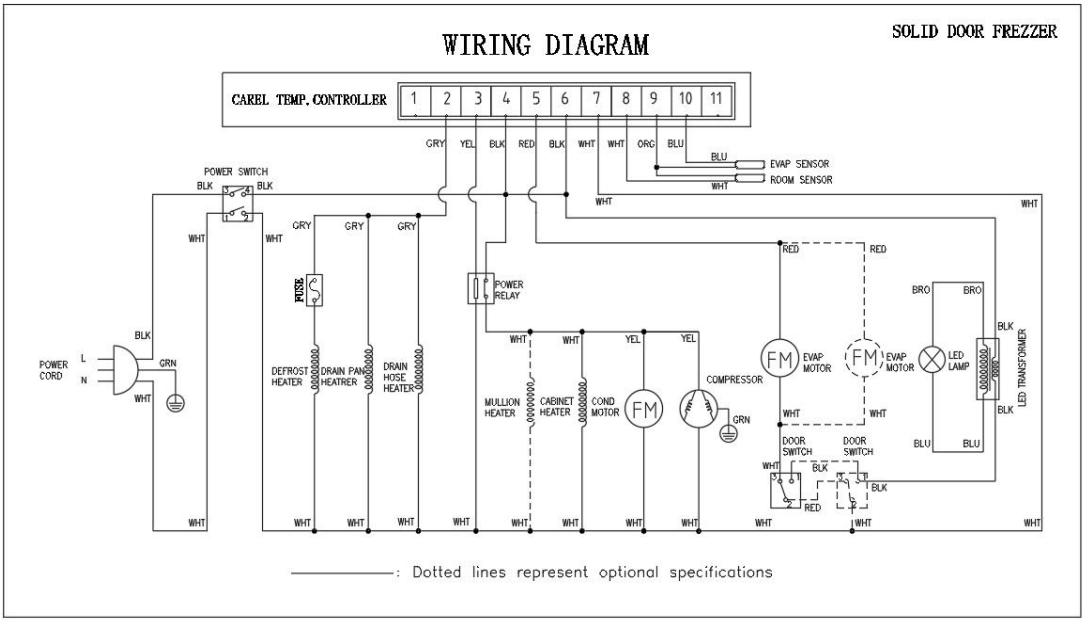

MODEL:ST27BRG ST54BRG

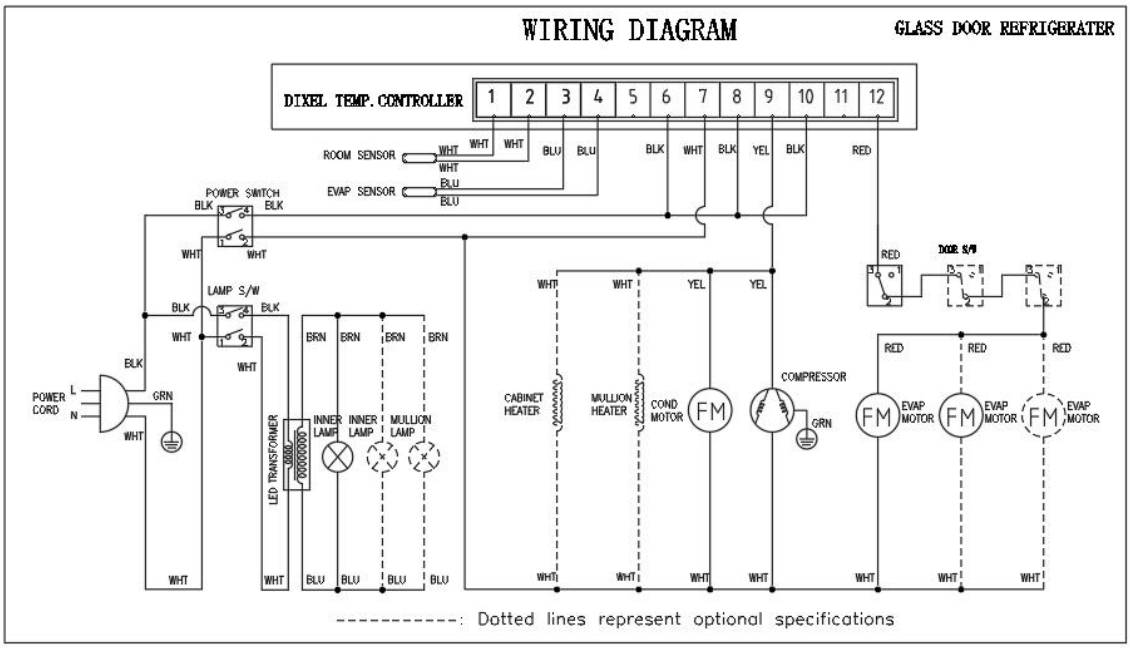

PART

MODEL:ST27BR ST27BF ST27BRG

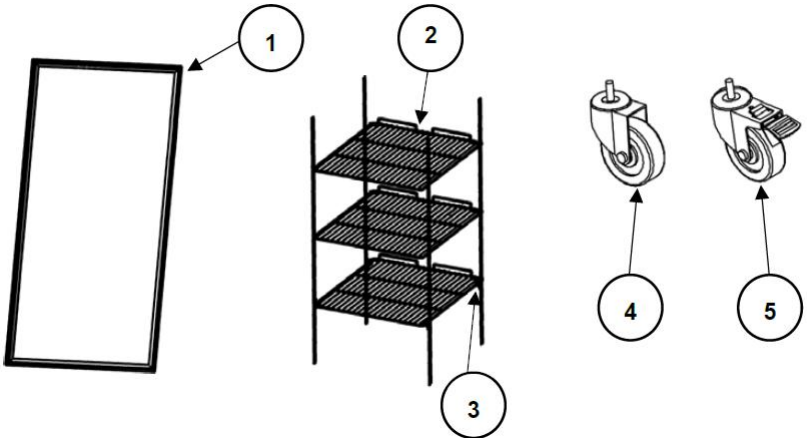

Ltem	Part Number	Descriptions	Qty/Unit
1	XKA-2-004-0002-0	Gasket	1
2	XKA-2-012-0033-0	Shelf	3
3	XKA-2-009-0957-0	Shelf clip	12
4	XKA-2-017-0002-0	Caster	2
5	XKA-2-017-0001-0	Caster with brake	2

MODEL:ST54BR ST54BF ST54BRG

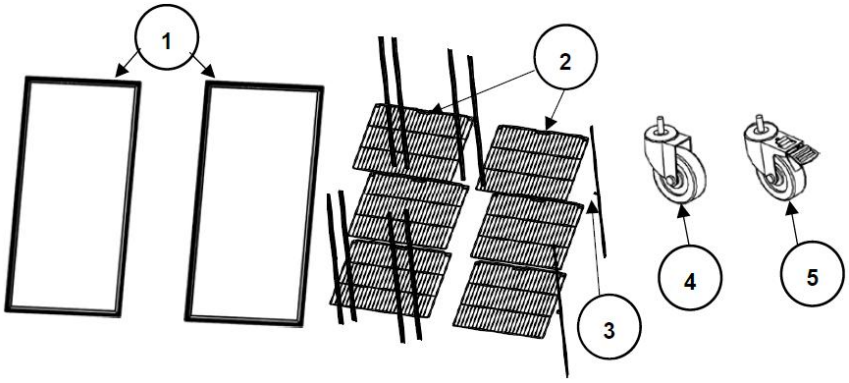

Ltem	Part Number	Descriptions	Qty/Unit
1	XKA-2-004-0002-0	Gasket	1
2	XKA-2-012-0034-0	Shelf left	3
2	XKA-2-012-0035-0	Shelf right	3
3	XKA-2-009-0957-0	Shelf clip	24
4	XKA-2-017-0002-0	Caster	2
5	XKA-2-017-0001-0	Caster with brake	2

Environmental Protection

Discarded electric appliances are recyclable and should not be discarded in the domestic waste! Please actively support us in conserving resources and protecting the environment by returning this appliance to the collection centres (if available).

Claims must be submitted immediately after their determination.

The right to guarantee claims expires upon any intervention of the purchaser or third parties. Damages caused by wrong treatment or operation, by false placement or storage, improper connection or installation, as well as force or other external influences are not covered by this guarantee. We recommend careful reading of the operating instructions as it contains important information.

The purchaser must prove the right to guarantee claims by presentation of the purchase receipt.

Note:

1. In case this product does not function correctly, please firstly check if there are other reasons, e.g. interruption of the power supply, or incorrect handling are the cause.

2. Please note that the following documents need to be submitted together with your faulty product:

- Purchase receipt
- Model description/Type/Brand
- Describe the fault and problem as detailed as possible.

In the case of a claim for guarantee or defects, please contact the seller personally.