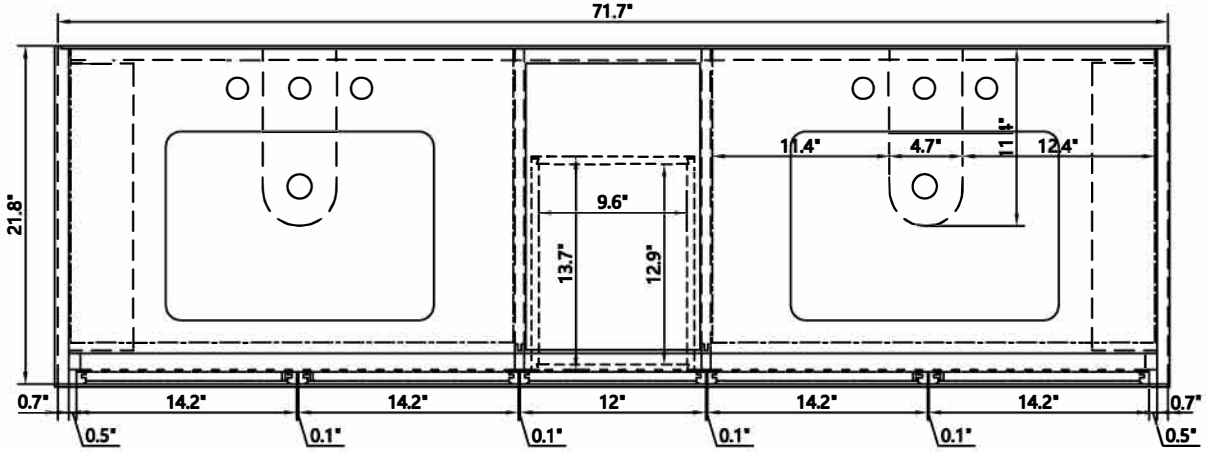
71.7"
21.8"
9.6"
13.7"
12.9"
11.4"
4.7"
11.4"
12.4"
0.7"
14.2"
14.2"
12"
14.2"
14.2"
0.7"
0.5"
0.1"
0.1"
0.1"
0.1"
0.5"

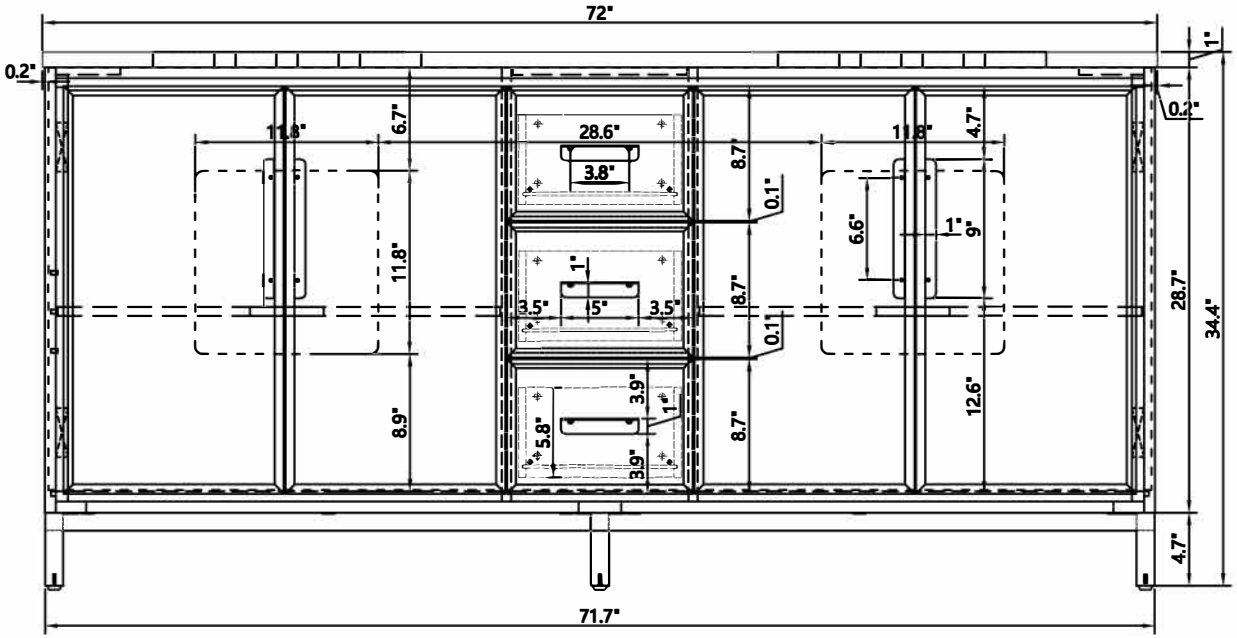
72"
0.2"
1"
0.2"
11.8"
6.7"
28.6"
3.8"
8.7"
0.1"
11.8"
4.7"
6.6"
1"
9"
11.8"
1"
3.5"
5"
3.5"
8.7"
0.1"
28.7"
34.4"
3.9"
1"
5.8"
3.9"
8.9"
8.7"
12.6"
4.7"
71.7"

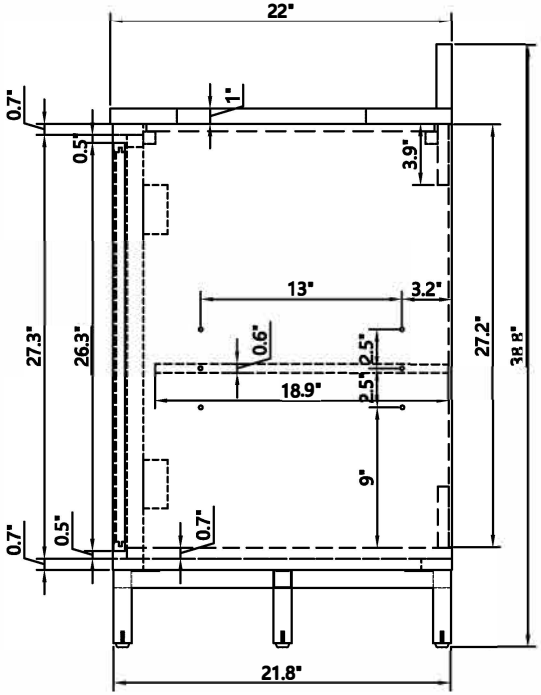
22"
0.7"
1"
0.5"
3.9"
13"
3.2"
0.6"
2.5"
27.3"
26.3"
27.2"
38.8"
18.9"
2.5"
9"
0.7"
0.5"
0.7"
21.8"

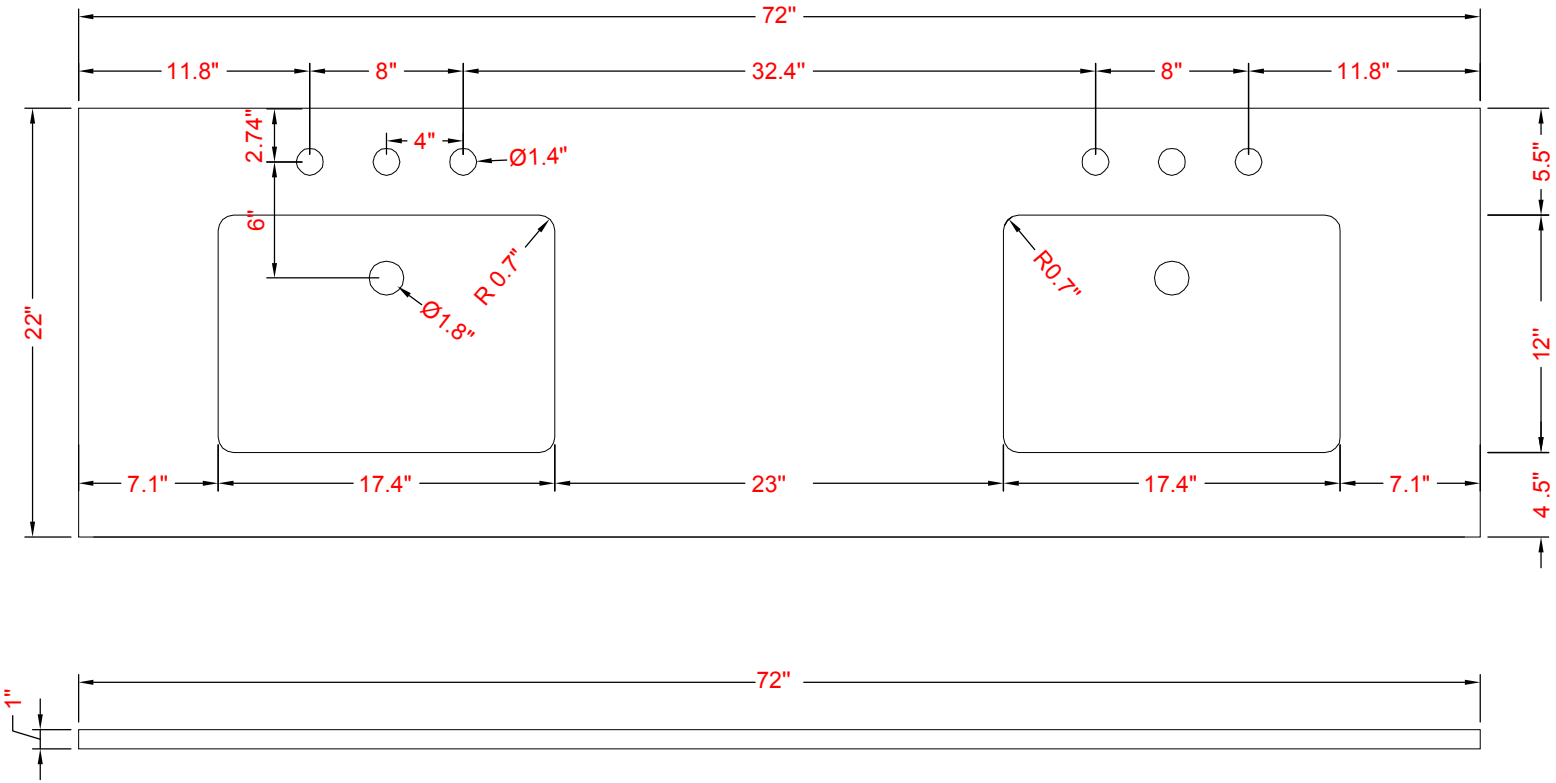
72"
11.8"
8"
32.4"
8"
11.8"
2.74"
4"
Ø1.4"
6"
R 0.7"
Ø1.8"
R0.7"
22"
5.5"
12"
4.5"
7.1"
17.4"
23"
17.4"
7.1"
72"
1"

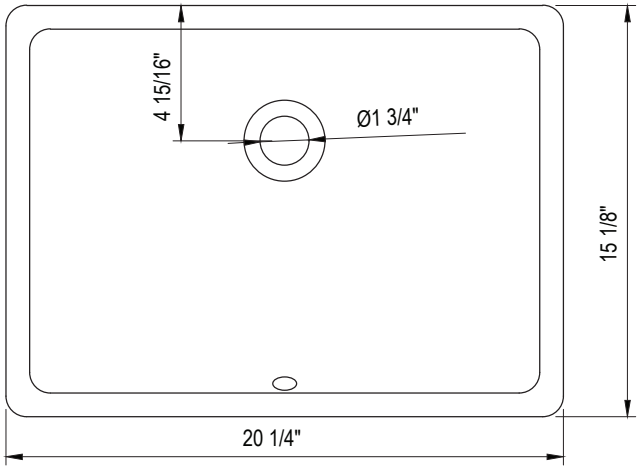
4 15/16"
Ø1 3/4"
15 1/8"
20 1/4"

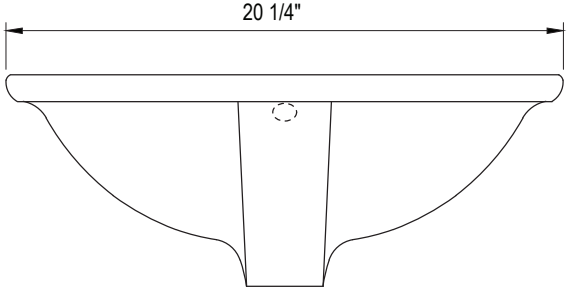
20 1/4"

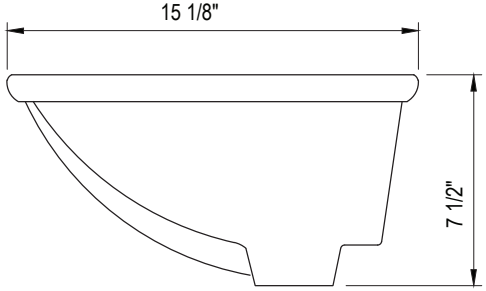
15 1/8"
7 1/2"