

*Actual product may vary.

Shoe Cabinet

Assembly Instruction

Home

Distinctively Yours!

1.Installation precautions

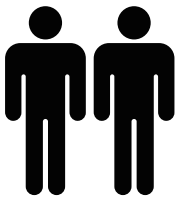

2 PERS.

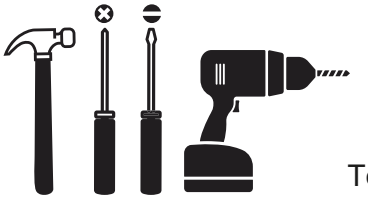

Tools required (not included)

2.Matters needing attention

⚠ WARNING





Children have died from furniture tipover. To reduce the risk of furniture tipover:

- ALWAYS install Anti-tip deviceprovided.
- NEVER put a TV on this product.
- NEVER allow children to stand, climb or hang on drawers, doors, or shelves.
- NEVER open more than one drawer at a time.

Place heaviest items in the lowes drawers.

This is a permanent label. Do not remove!

Cam Lock Fastening System

Insert the cam bolt into the hole first, then insert the cam lock and lock it.

1. 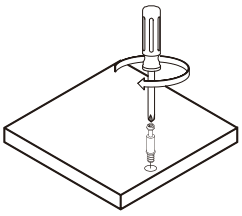

2. 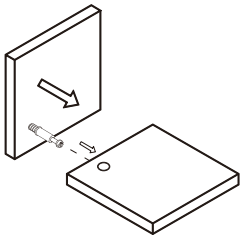

3. 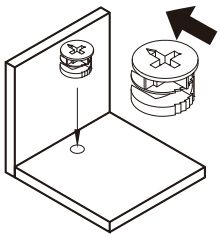

The opening must point toward the edge of the board

4. 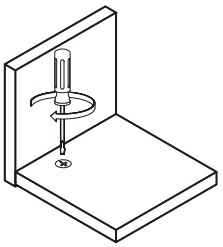

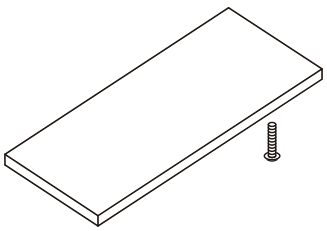

Be sure to use the proper screws to avoid damaging the parts.

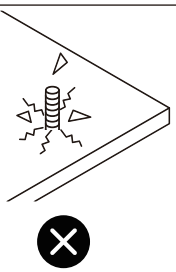

Wrong screws can cause the plank to crack

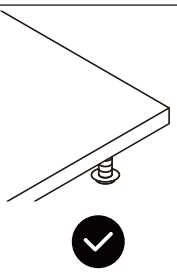

The right screw is the right size

Please check that you have all the parts listed before starting assembly, if you find something missing, please stop the assembly and contact us immediately.

1

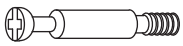

A
x14(+2)
Ø6x35mm



B
x14(+2)
Ø15x9.5mm

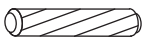

C
x2
Ø6x30mm

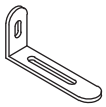

D
x2



E
x8(+1)
Ø4x12mm

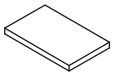

F
x4(+2)
Ø30x20mm



G
x10(+2)
Ø3x12mm

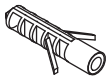

H
x2
Ø6x30mm

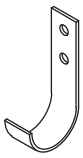

I
x2

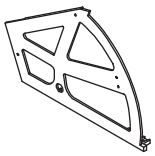

J
x2

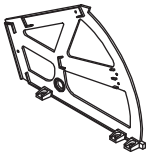

K
x2



L
x28(+2)
Ø4x13mm

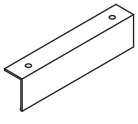

M
x2



N
x4
Ø3.5x12mm



Q
x2
Ø4x35mm



R
x4

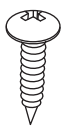

S
x4
Ø4x14mm

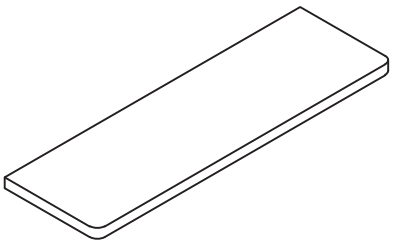

1
x1

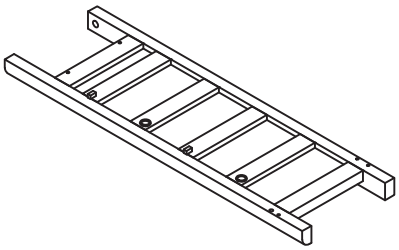

2
x1

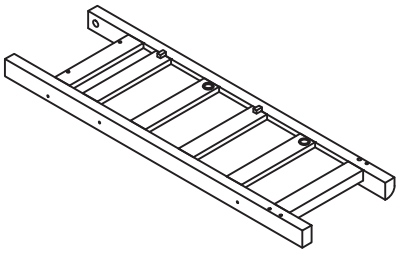

3
x1

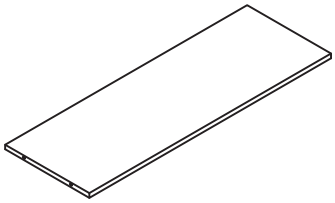

4
x1

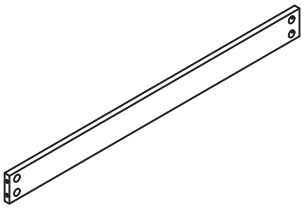

5
x1

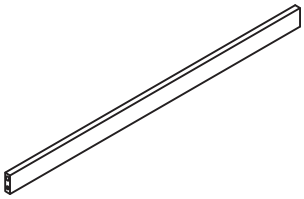

6
x1

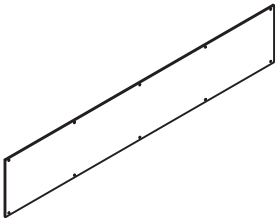

7
x1

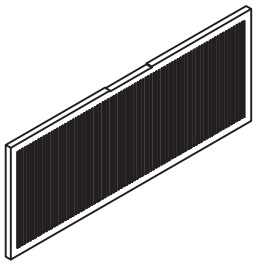

8
x2

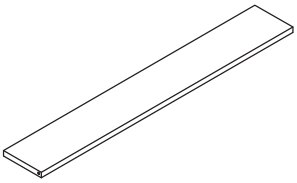

9
x4

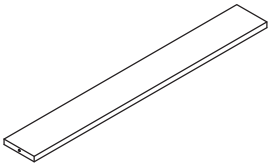

10
x2

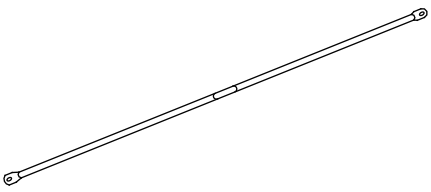

11
x2

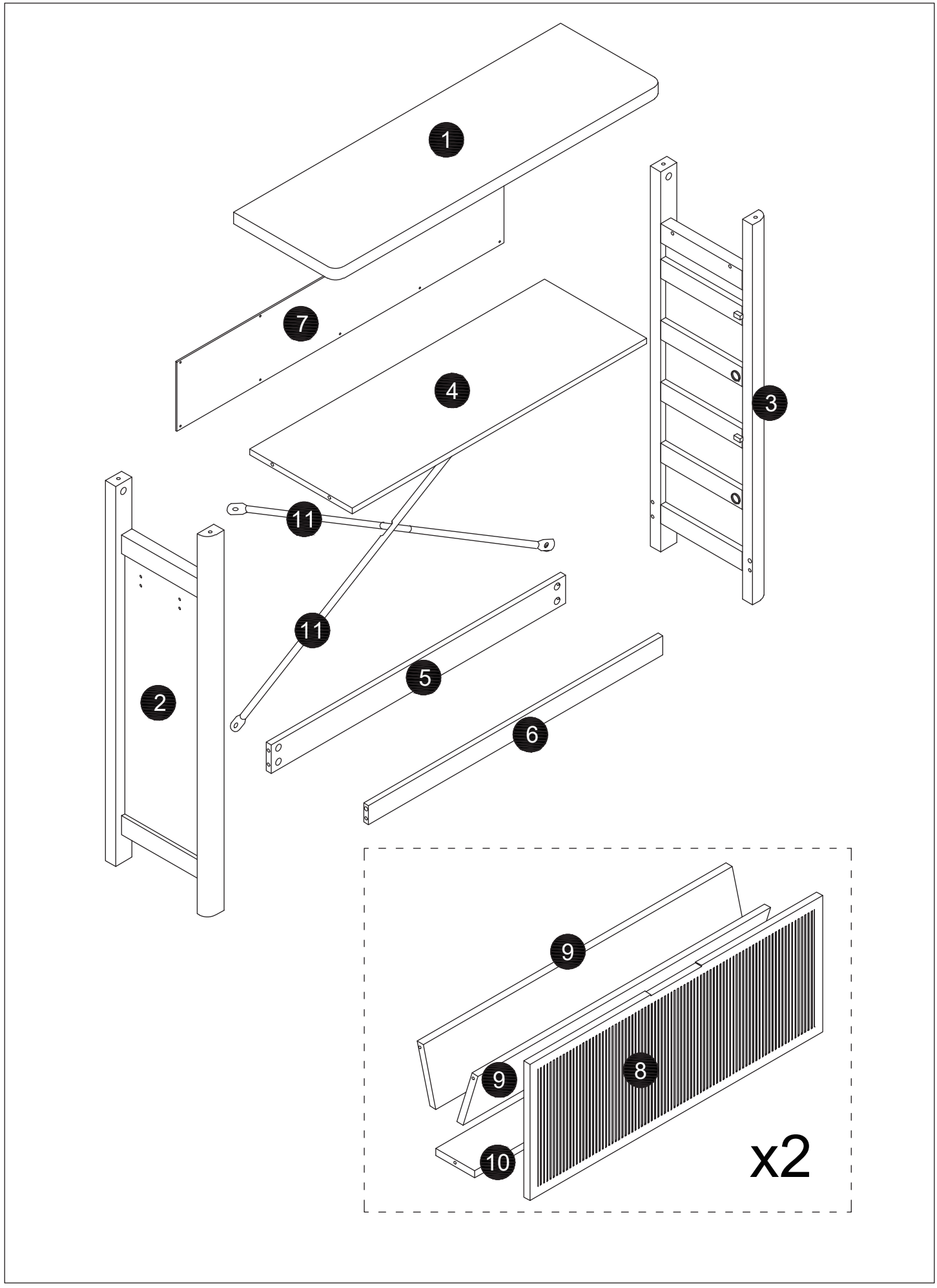
1
7
4
3
11
11
2
5
6
9
8
9
10
x2

1

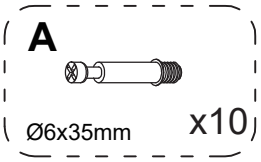

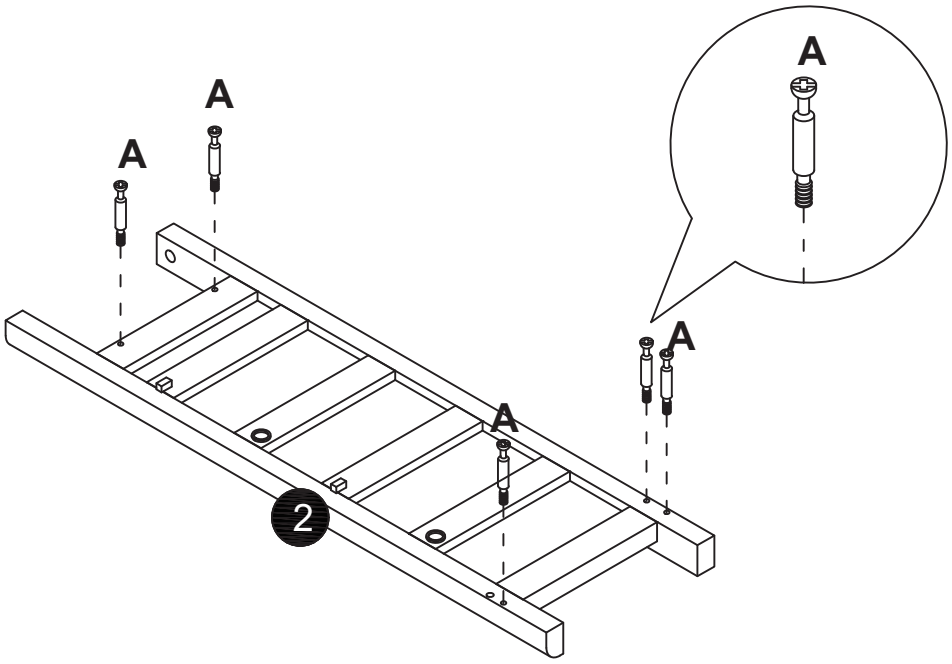

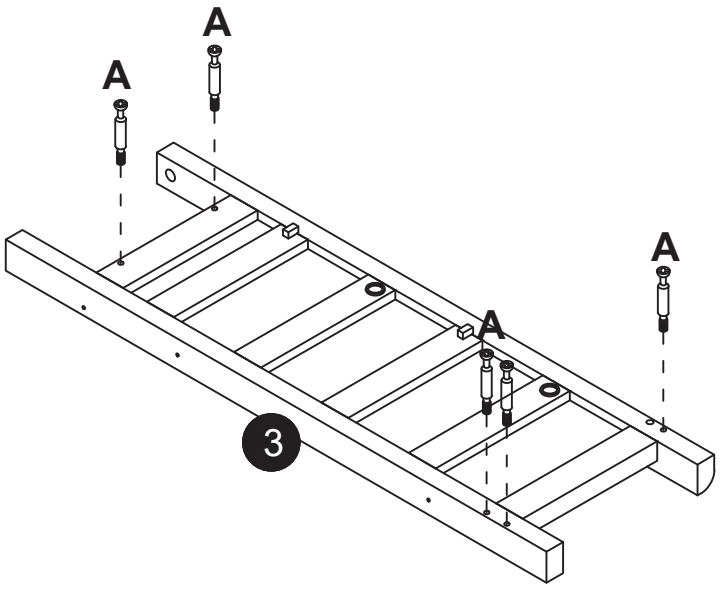

2

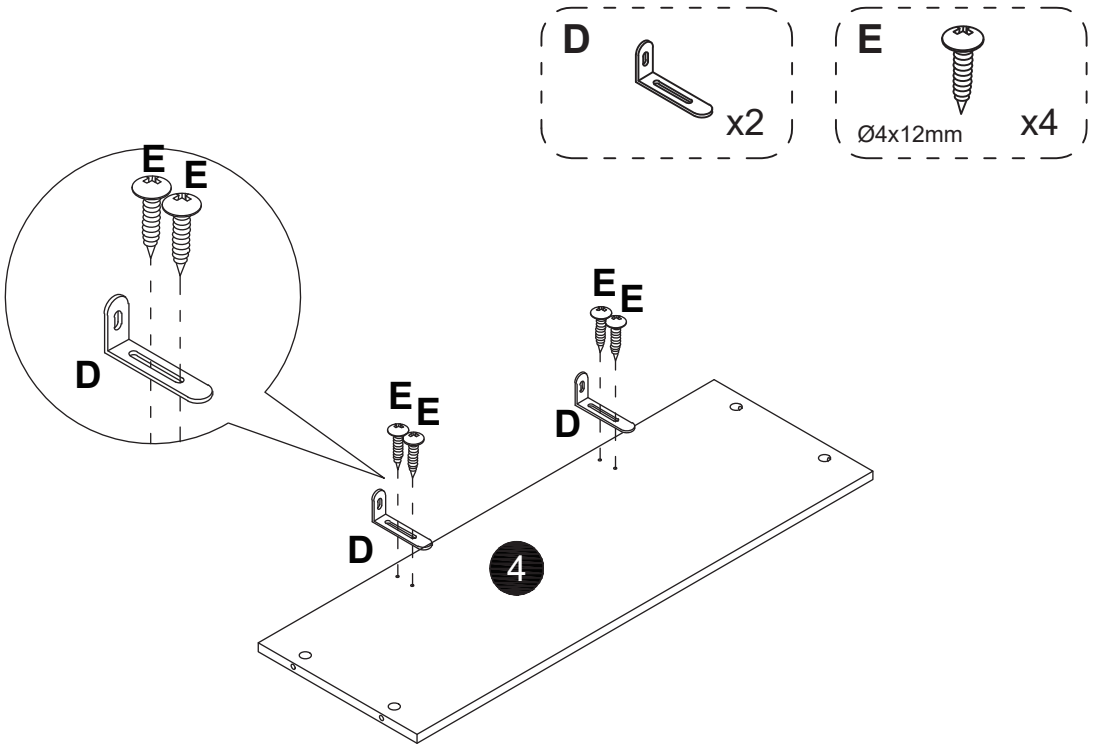
D
x2
E
Ø4x12mm
x4
E
E
D
E
E
D
D
4

3

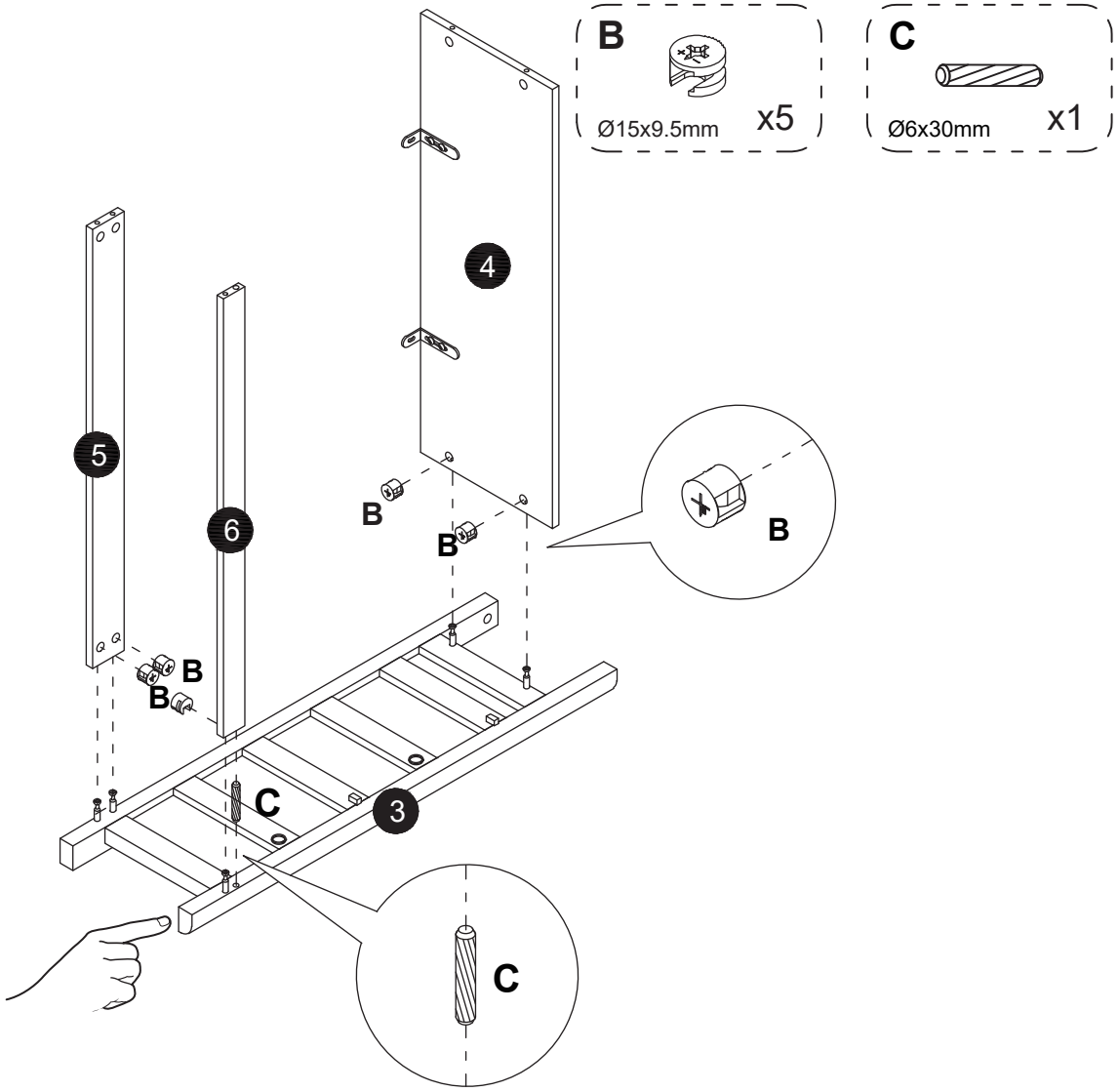
B
Ø15x9.5mm
x5
C
Ø6x30mm
x1
4
5
6
B
B
B
B
B
C
3
C

4

B
Ø15x9.5mm x5

C
Ø6x30mm x1

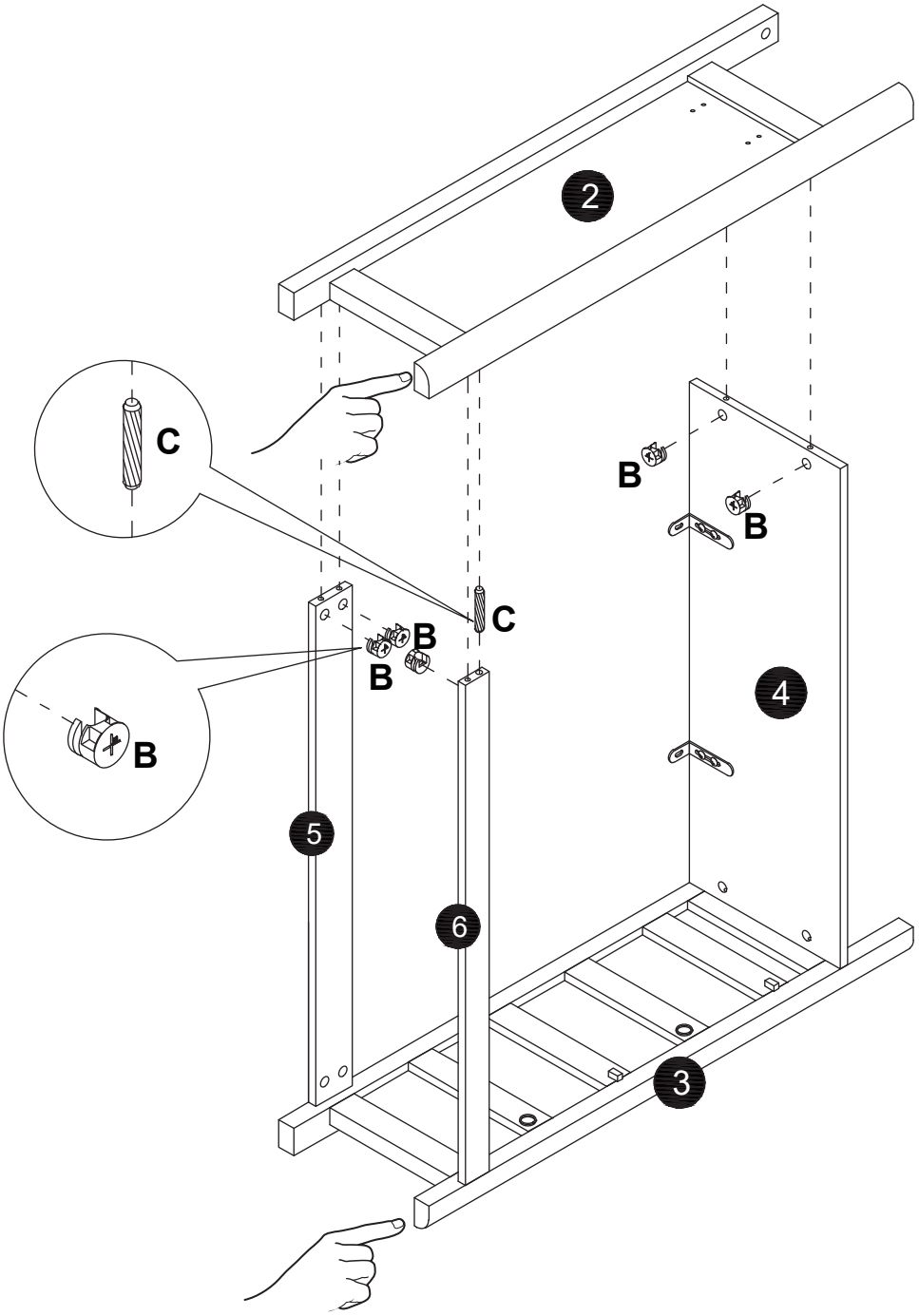

5

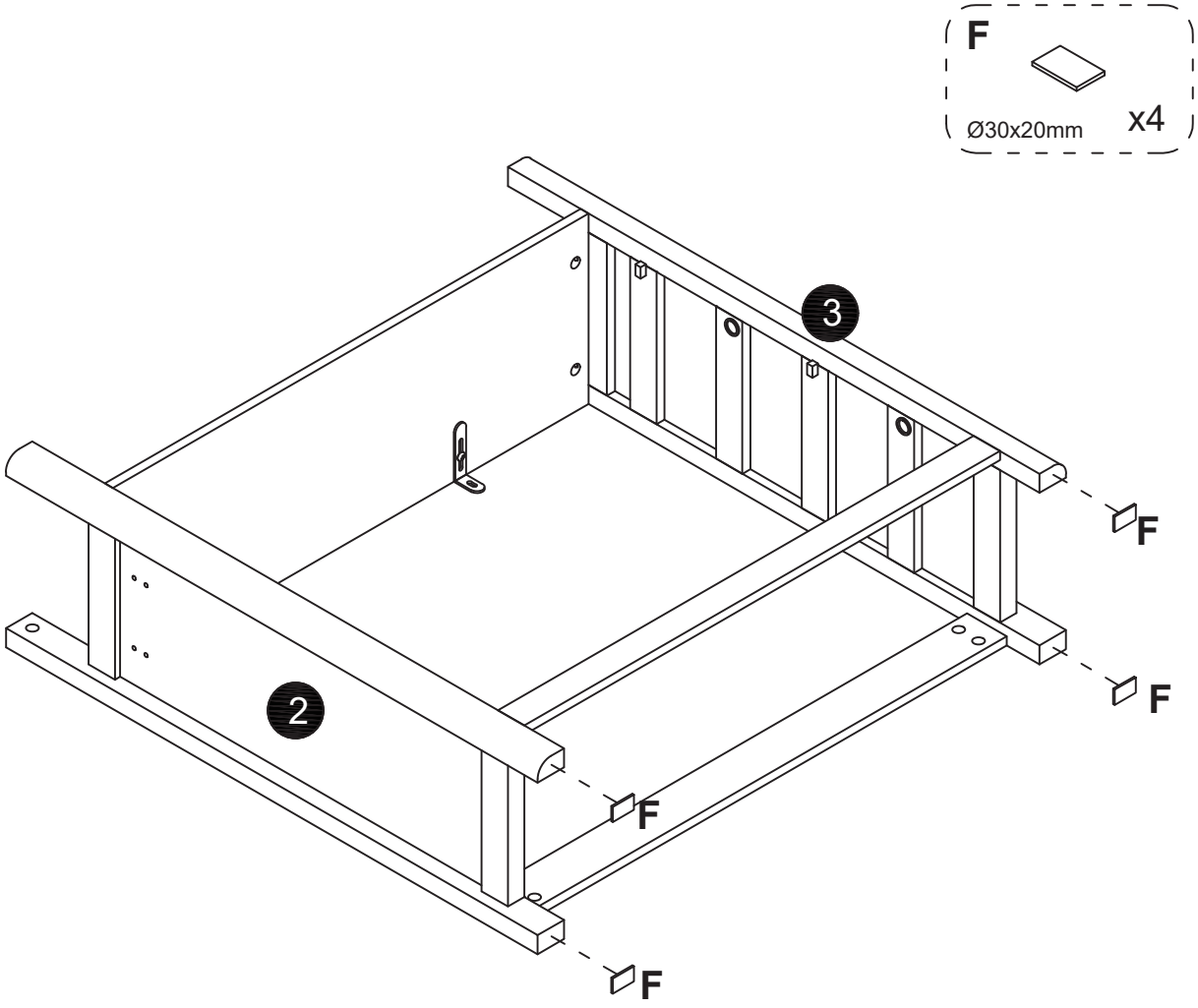

6

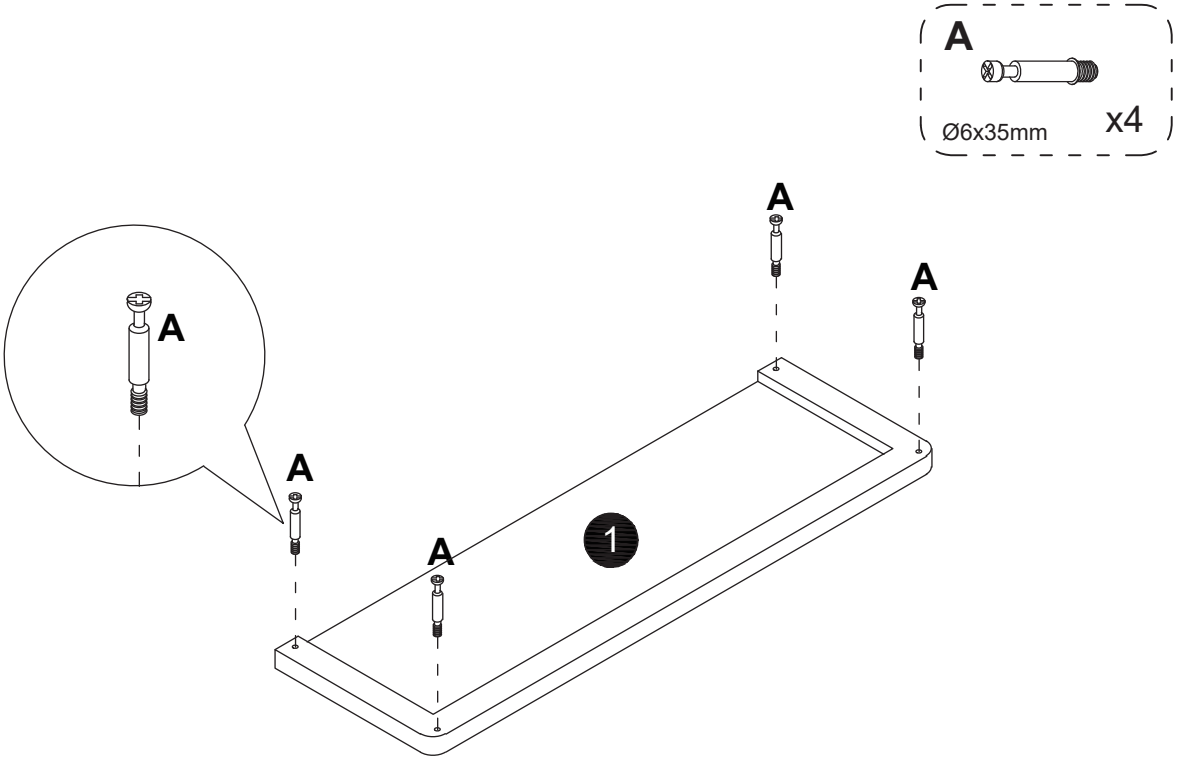

7

B



Ø15x9.5mm x4

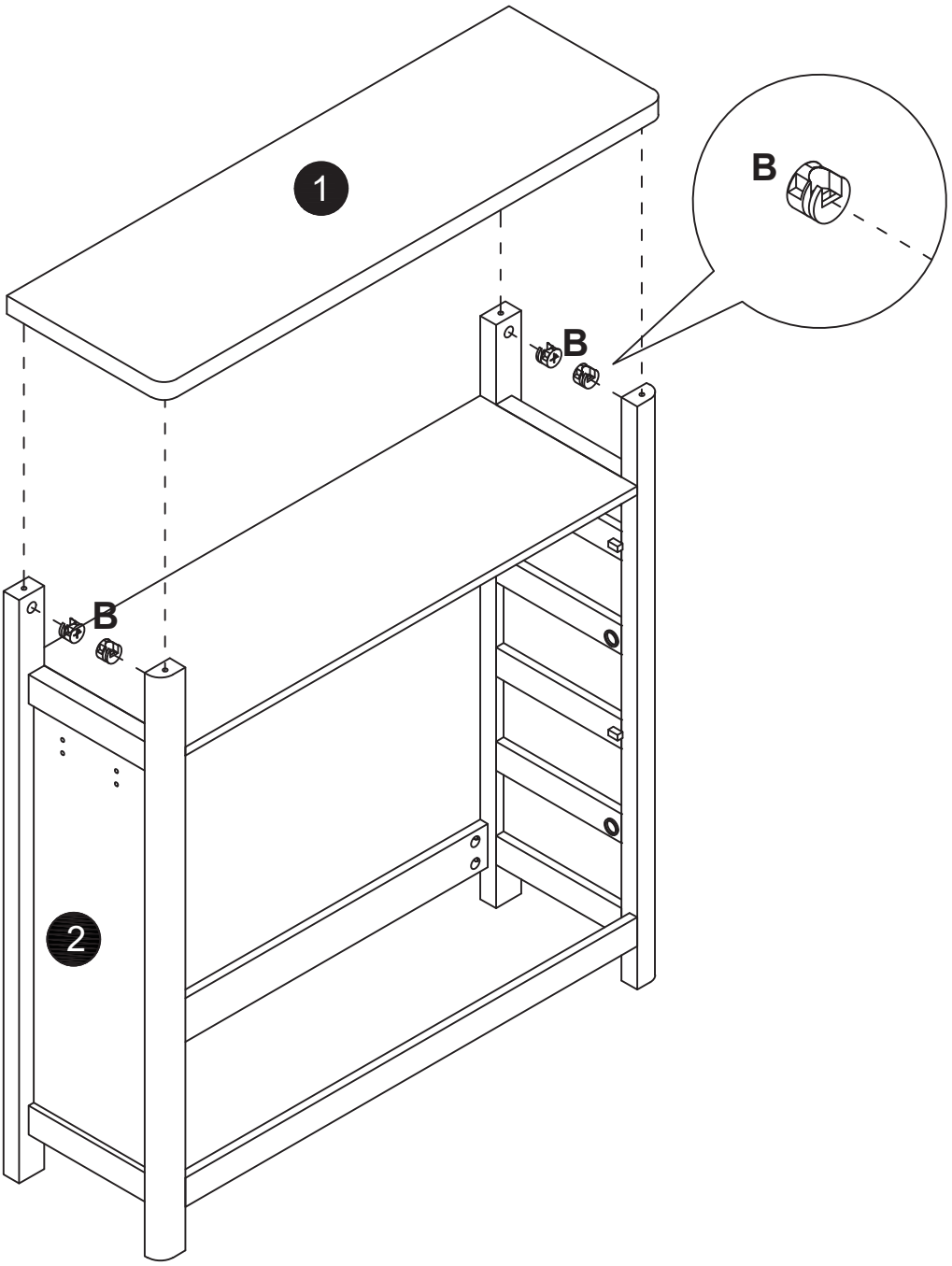

AOGLLATI

8

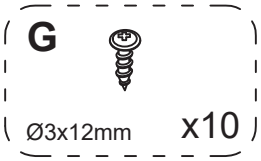

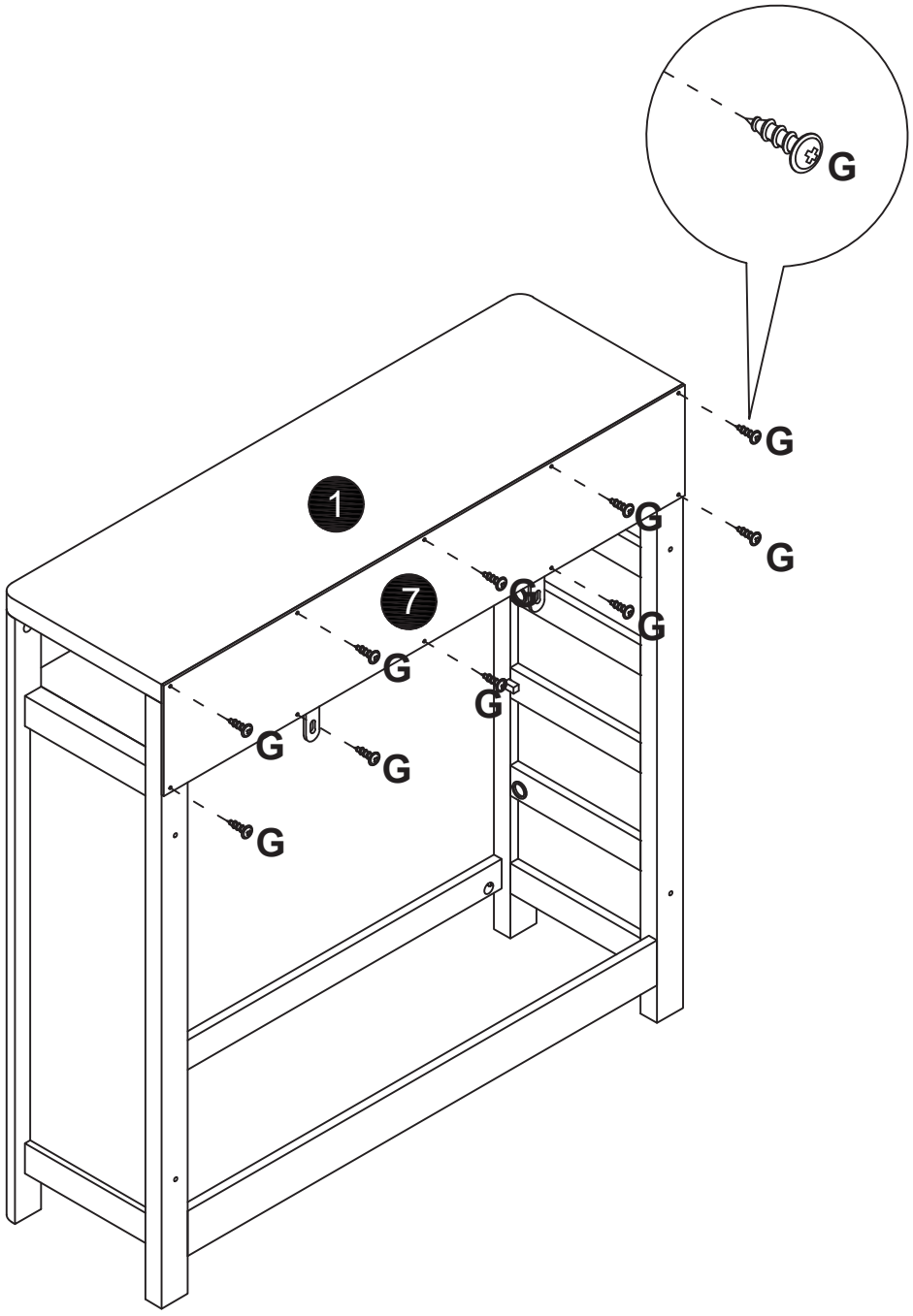

9

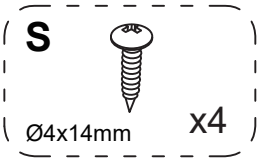

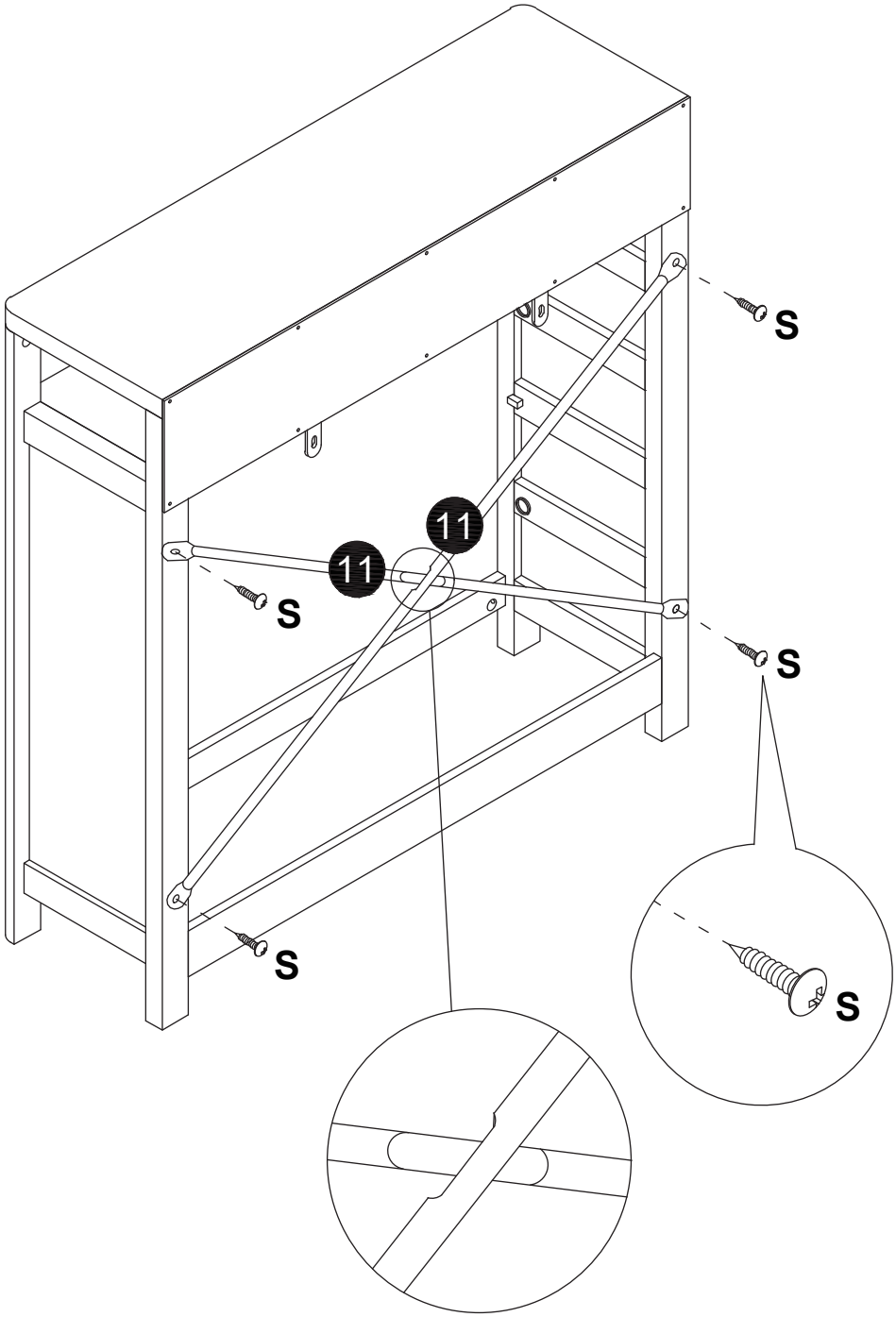

10

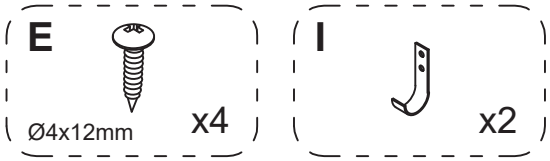

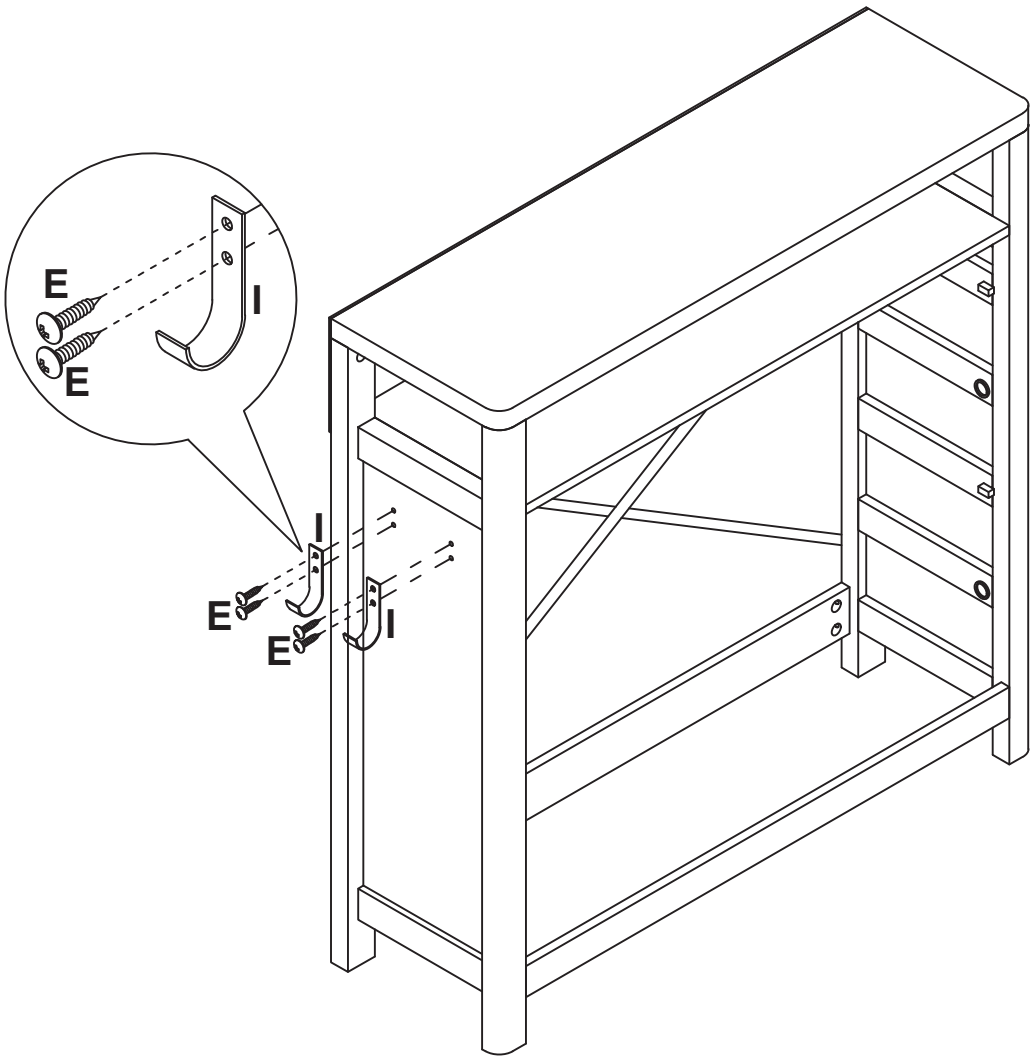

11

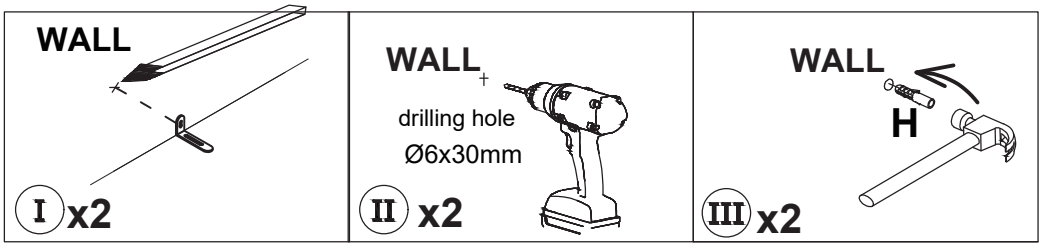
WALL
I x2
WALL
drilling hole
Ø6x30mm
II x2
WALL
H
III x2

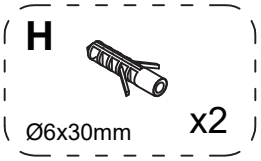
H
Ø6x30mm
x2

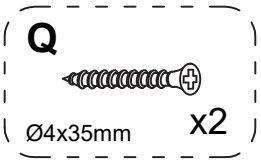
Q
Ø4x35mm
x2

WALL
Q
Q

12

x2

J x2

K x2

L Ø4x13mm x16

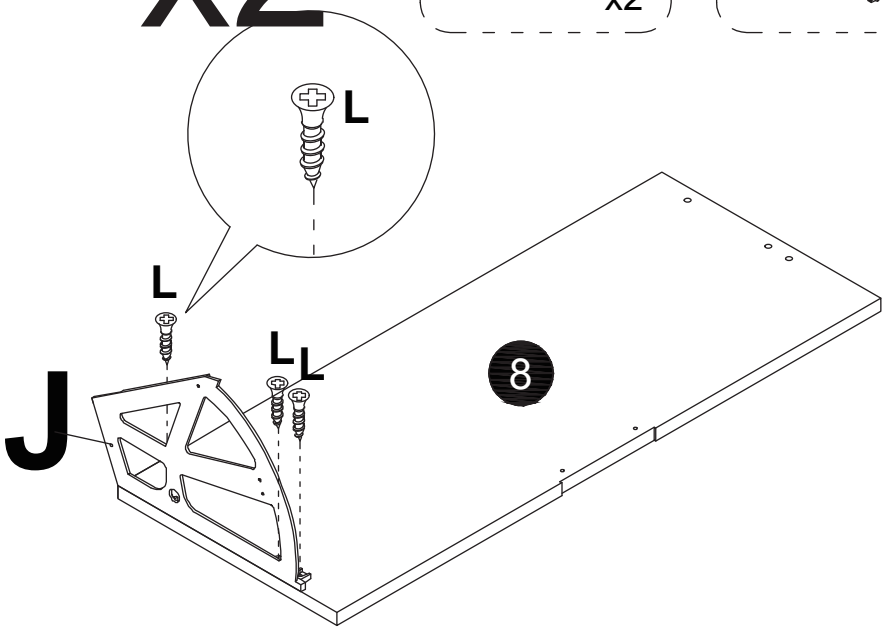

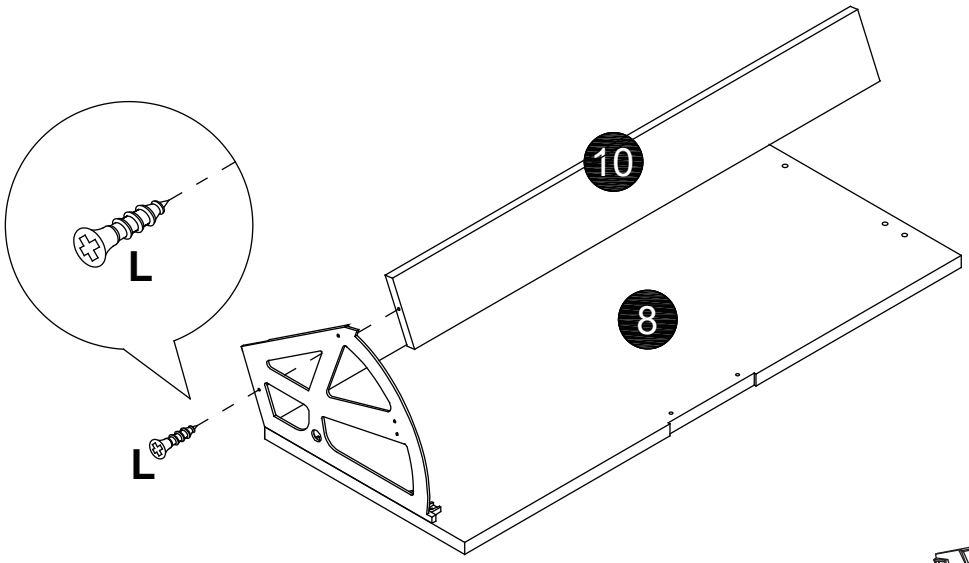

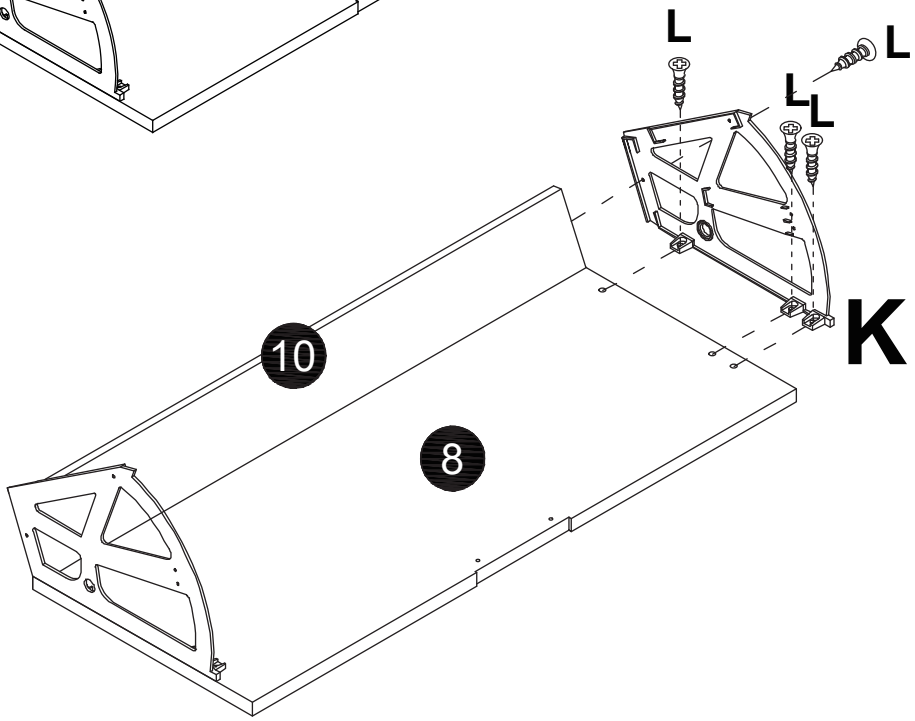

13

x2

L Ø4x13mm x4

M x2

N Ø3.5x12mm x4

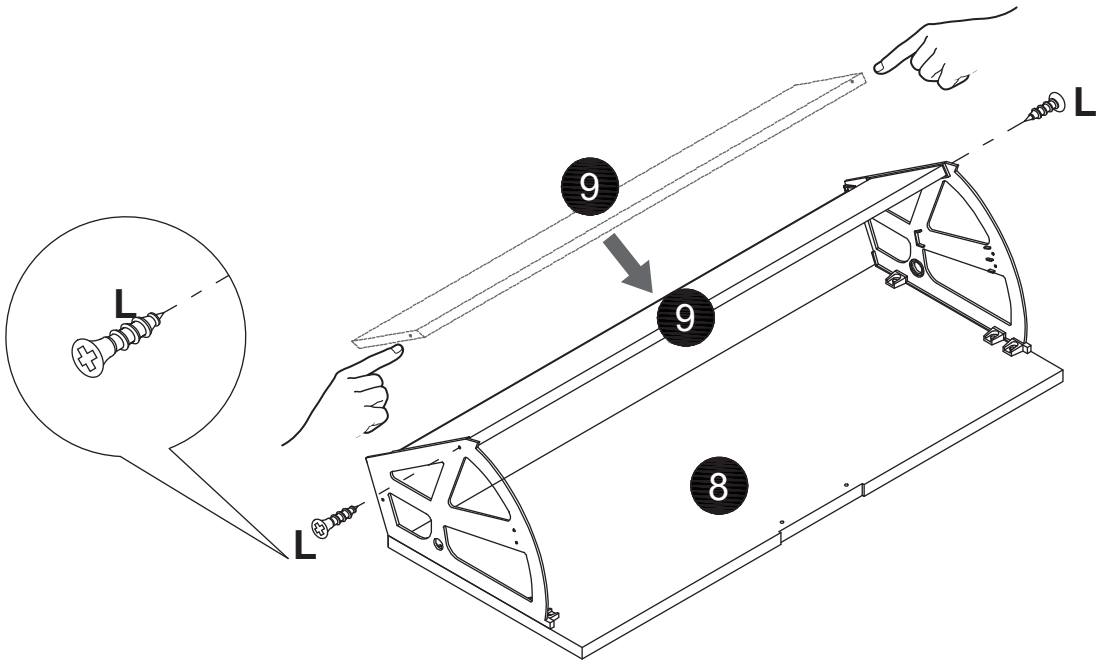

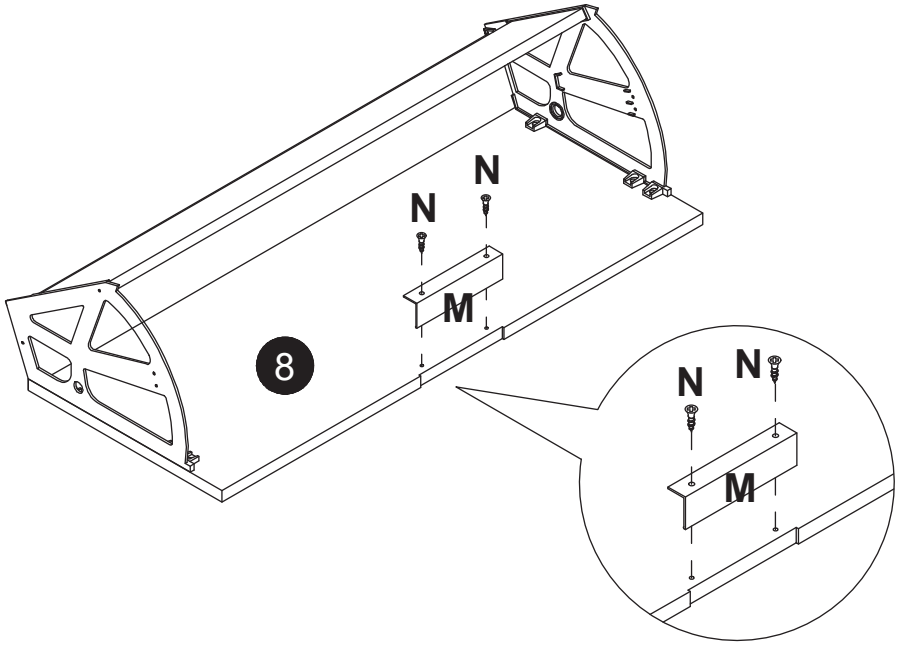

14

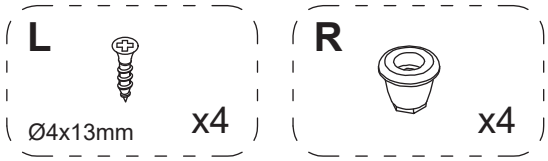

Note: This step requires at least two people or more to operate to prevent damage to the parts

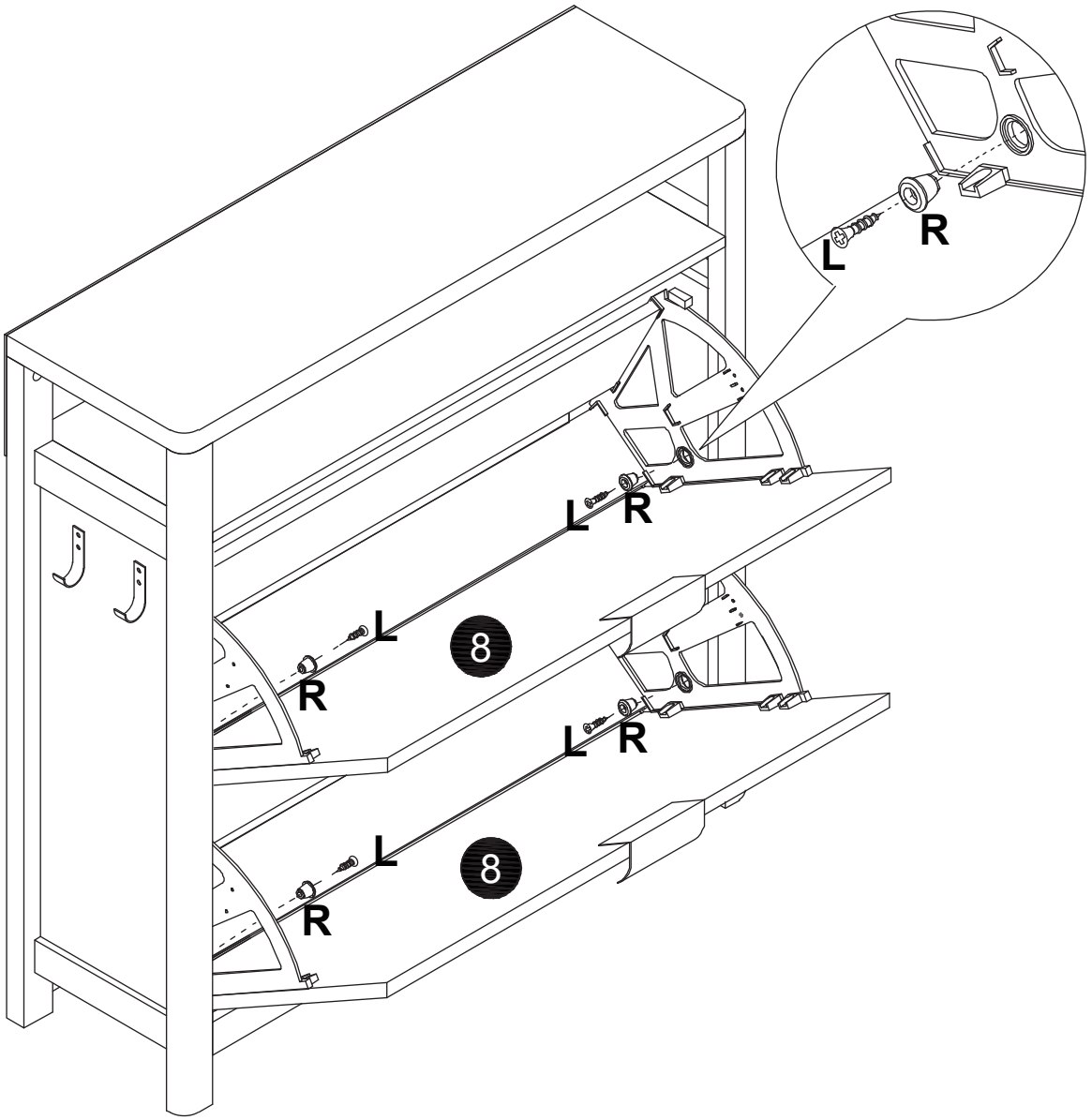

15

