Bed Frame Installation Manual

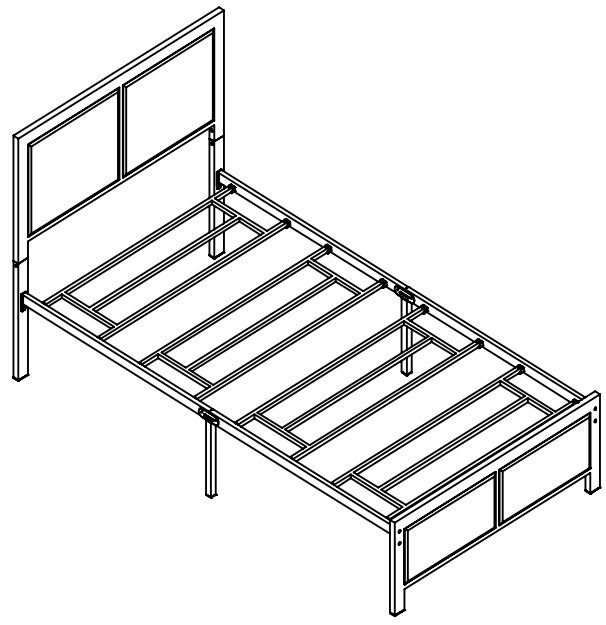

Team Assembly Recommended

Componets

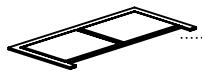
❶X1


❷X2

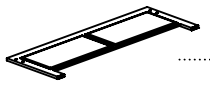
❸X1


❺X1


❻X1


❽X4

Screws &Tools

Ⓐ		M8x40mm	x4
Ⓑ	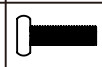	M6x20mm	x16
Ⓒ		M6x15mm	x10
Ⓛ		M8	x8
Ⓜ	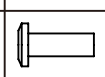	M6x20mm	x4
Ⓝ	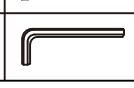	M4	x2

Check all the components & screws before assembly. Do not install in case part is missing, contact us to get.

❶

Note: For easy setup intention, do not tighten screws during the installation process

Ⓒ M6×15 6pcs

Ⓝ

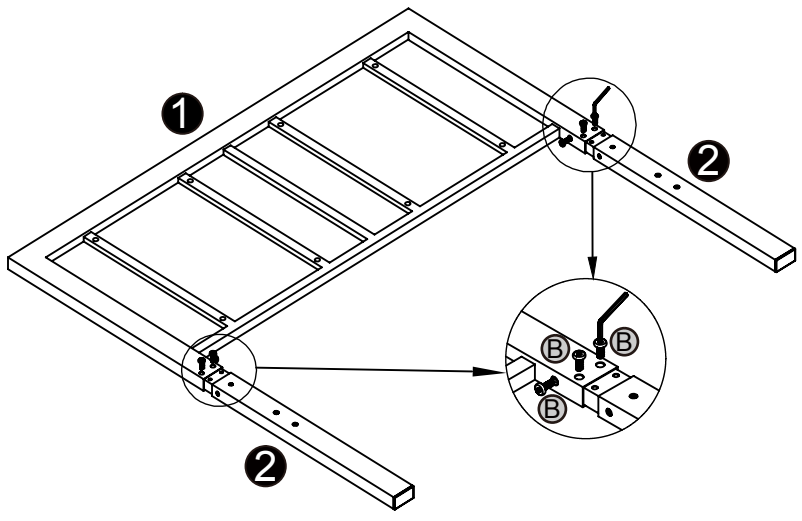

❷

Ⓐ M8×40 4pcs

Ⓒ M6×15 4pcs

Ⓛ M8 8pcs

Ⓜ M6×20 4pcs

Ⓝ

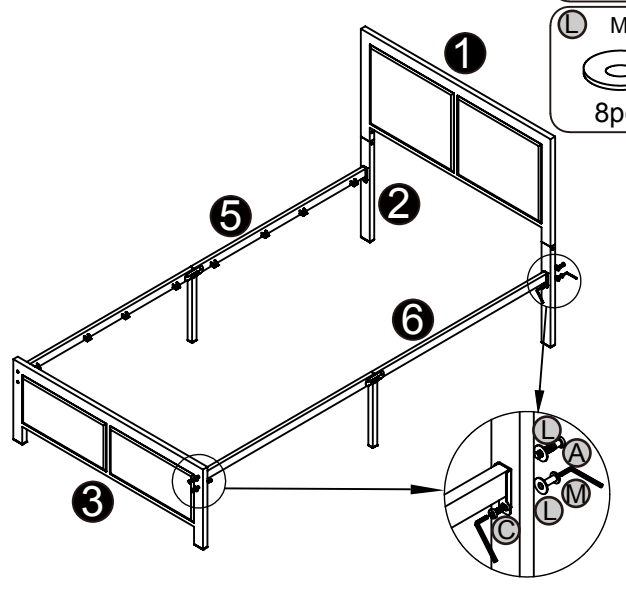

3

Ⓒ M6×20

16pcs

ⓃⓃ

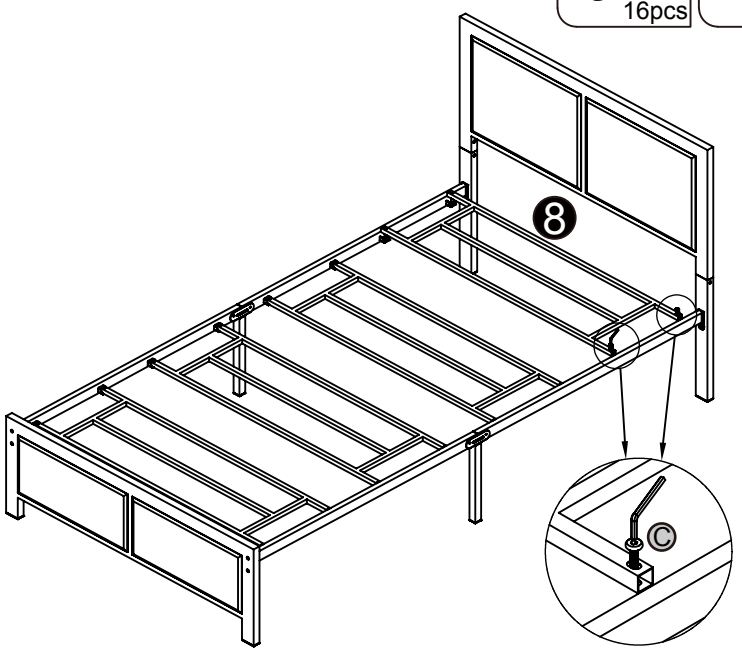

4

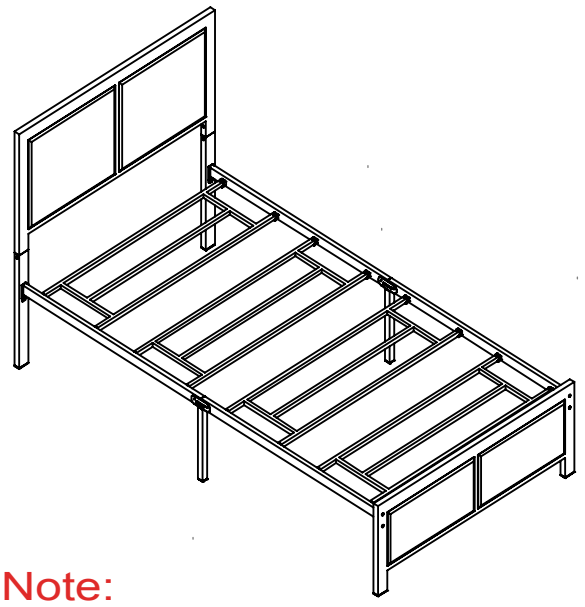

Note:

Check and tighten all screws

CAUTIONS!

