206 Wembly Road
New Windsor, NY 12553
Phone: 718.602.6060
Fax: 718.963.2082
info@finefixtures.com
www.finefixtures.com

INSTALLATION INSTRUCTIONS

LEAFSIDE
VANITY COLLECTION

36”

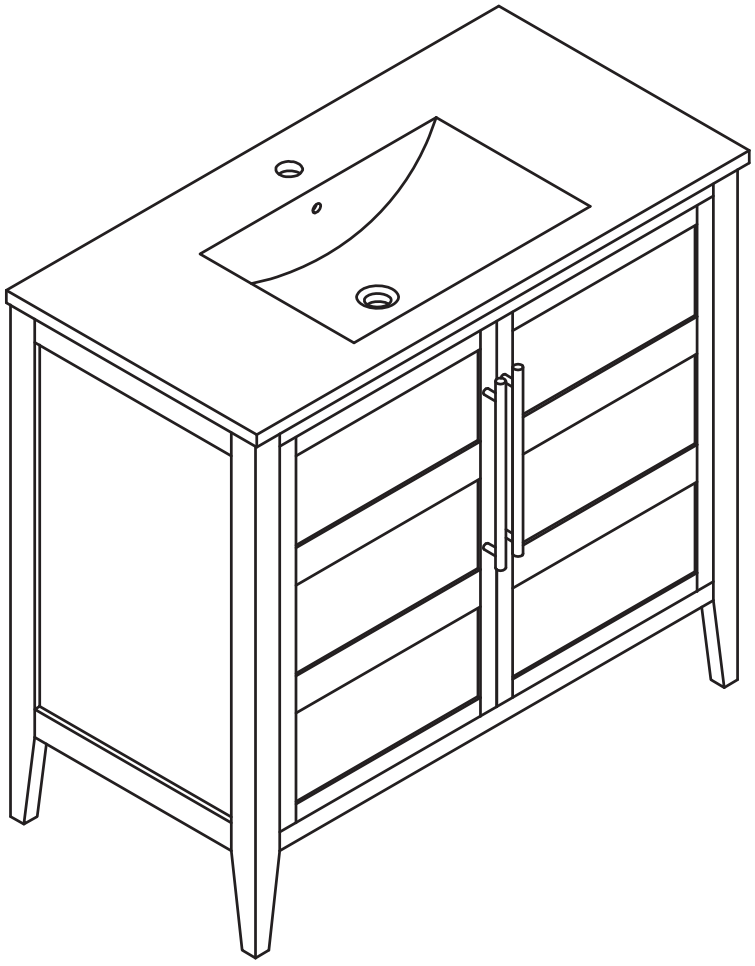

MODEL# LS36

206 Wembly Road
New Windsor, NY 12553
Phone: 718.602.6060
Fax: 718.963.2082
info@finefixtures.com
www.finefixtures.com

READ ALL INSTRUCTIONS BEFORE UNPACKING THE PRODUCT

INSTRUCTIONS THAT, IF IGNORED, COULD RESULT IN DEATH OR SERIOUS INJURY CAUSED BY INCORRECT HANDLING OR INSTALLATION OF THE PRODUCT. THESE INSTRUCTIONS MUST BE OBSERVED FOR SAFE INSTALLATION.

CAUTION! TWO PERSON LIFT REQUIRED

TWO (2) PEOPLE ARE REQUIRED TO LIFT DURING ENTIRE INSTALLATION PROCESS OF THIS PRODUCT.

INSTALLATION OF THIS PRODUCT BY AN INEXPERIENCED INSTALLER MAY RESULT IN PERSONAL INJURY OR DEATH!

We reserves the right to change, update, modify, alter, redesign this manual/product or its policies without prior notice!
It is your responsibility to visit the website to download or contact customer service for the most updated version of the installation instructions.

We shall not be liable for any injuries or property damages in connection with this product during installation or use of this product!

- **Limited warranty is void on any commercial installation.**
- **We are not responsible for local code compliance for this product.**
- **Building and plumbing codes may vary from state-to-state in accordance to your location.**
- **We are not responsible for providing any compliance certifications.**
- **We are not responsible to provide any type of certifications for this product.**
- **Under no circumstances we shall not be liable for any and all incidental damages sustained in connection with this product Neither manufacture, nor distributor, nor retailer is responsible for water damage or flood caused due to use of this product.**
- **Under no circumstances We shall not be liable for any and all fees, cost of installation/reinstallation/removal, subsequent damage or transportation in case of the product defect.**

VANITY COMPONENTS

During unpacking the product and prior to installation inspect your new product for any damages or missing parts.

DO NOT ATTEMPT TO INSTALL OR OPERATE THE PRODUCT, IF THE PRODUCT IS DAMAGED.

PART A		2 PIECES
PART B	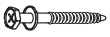	2 PIECES
PART C		2 PIECES
PART D		2 PIECES
PART E	 Screws M4 x 25mm	4 PIECES

TOOLS REQUIRED


Safety Glass


Silicone/
Caulk Gun


Tape
Measure

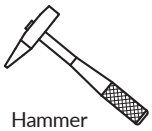
Hammer

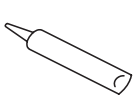
Silicone

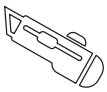
Knife

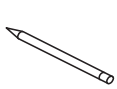
Pencil/Marker

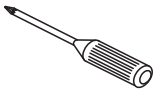
Philips
Screwdriver

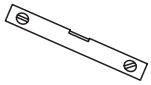
Level


Soft Cloth
or Blanket

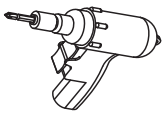
Drill

Drill Bit

206 Wembly Road
New Windsor, NY 12553
Phone: 718.602.6060
Fax: 718.963.2082
info@finefixtures.com
www.finefixtures.com

DIMENSIONS/TECHNICAL DATA

MODEL# LS36

WALL

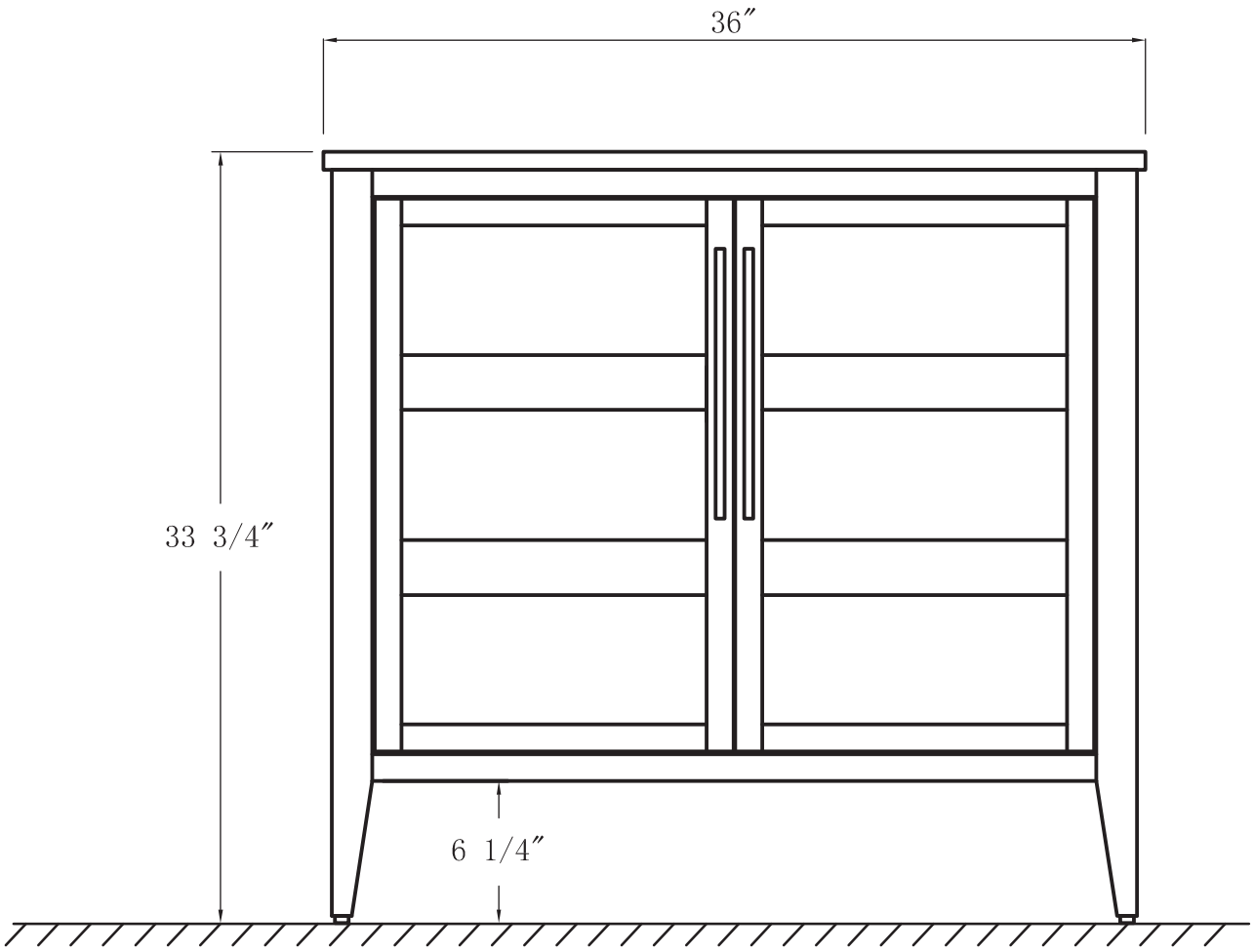

FLOOR

ATTENTION! Dimensions may vary by up to 3/8".
It is highly recommended to pull all dimensions of actual model for installation and measuring purposes.

206 Wembly Road
New Windsor, NY 12553
Phone: 718.602.6060
Fax: 718.963.2082
info@finefixtures.com
www.finefixtures.com

1

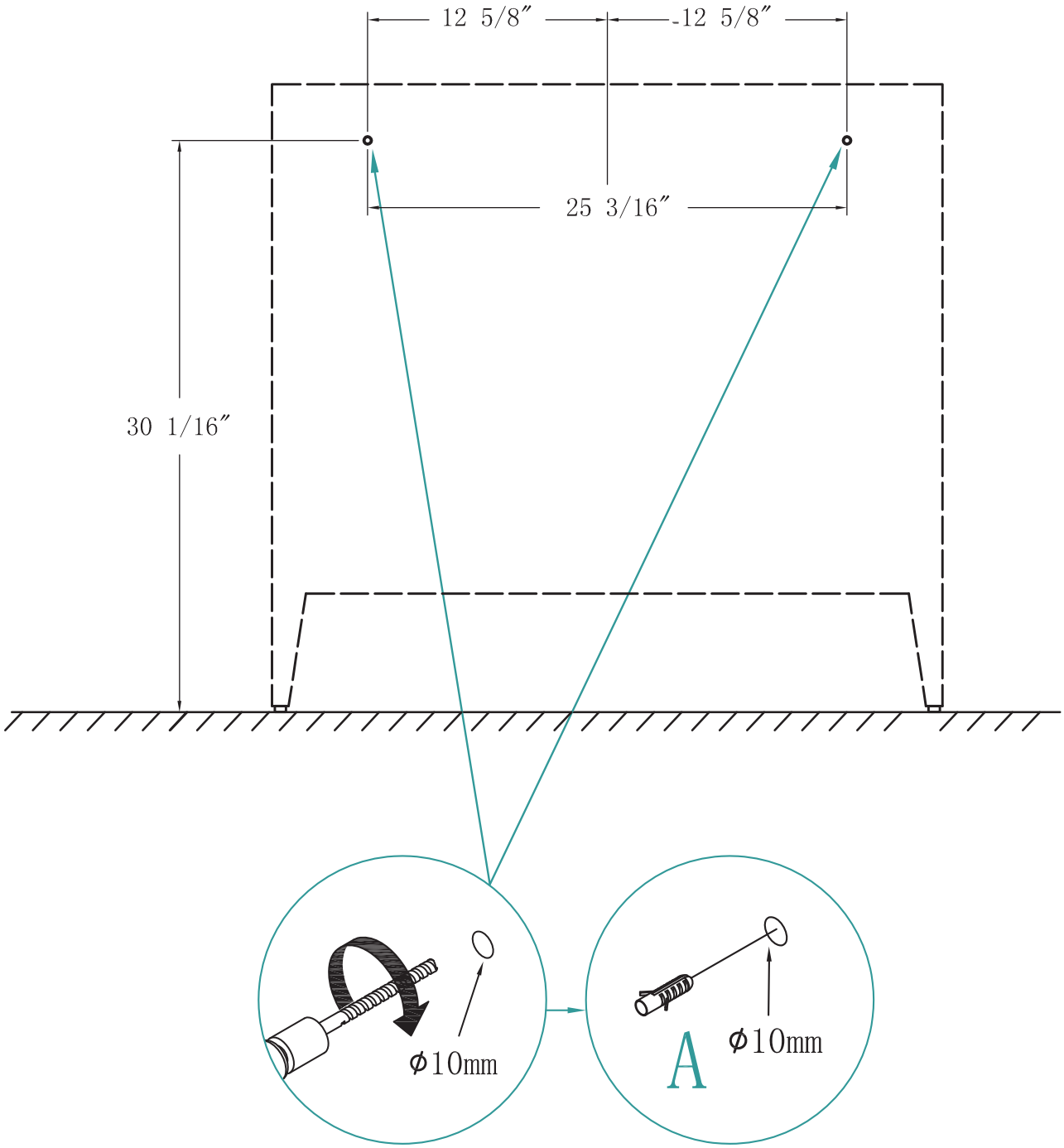

206 Wembly Road
New Windsor, NY 12553
Phone: 718.602.6060
Fax: 718.963.2082
info@finefixtures.com
www.finefixtures.com

2

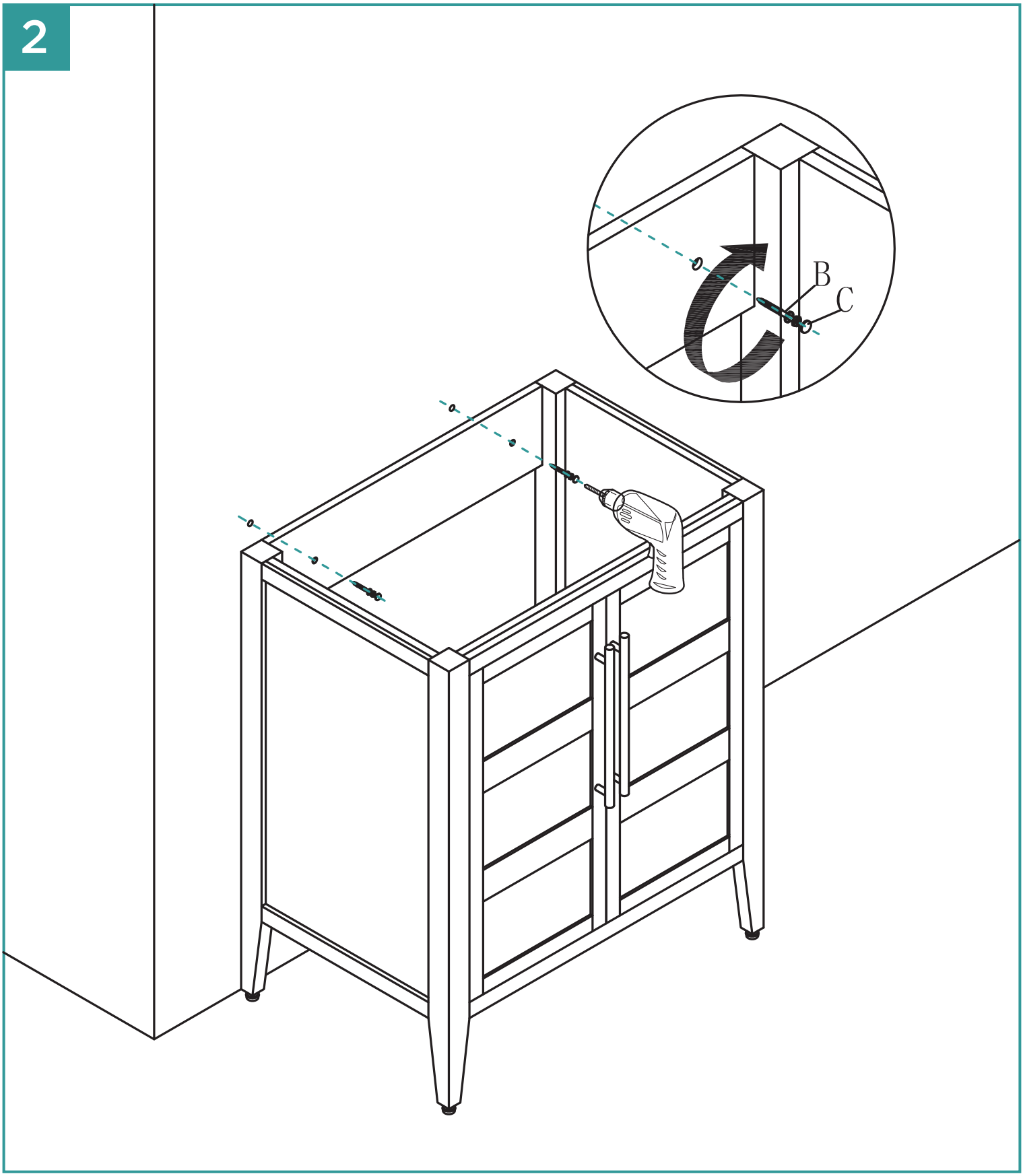

206 Wembly Road
New Windsor, NY 12553
Phone: 718.602.6060
Fax: 718.963.2082
info@finefixtures.com
www.finefixtures.com

3

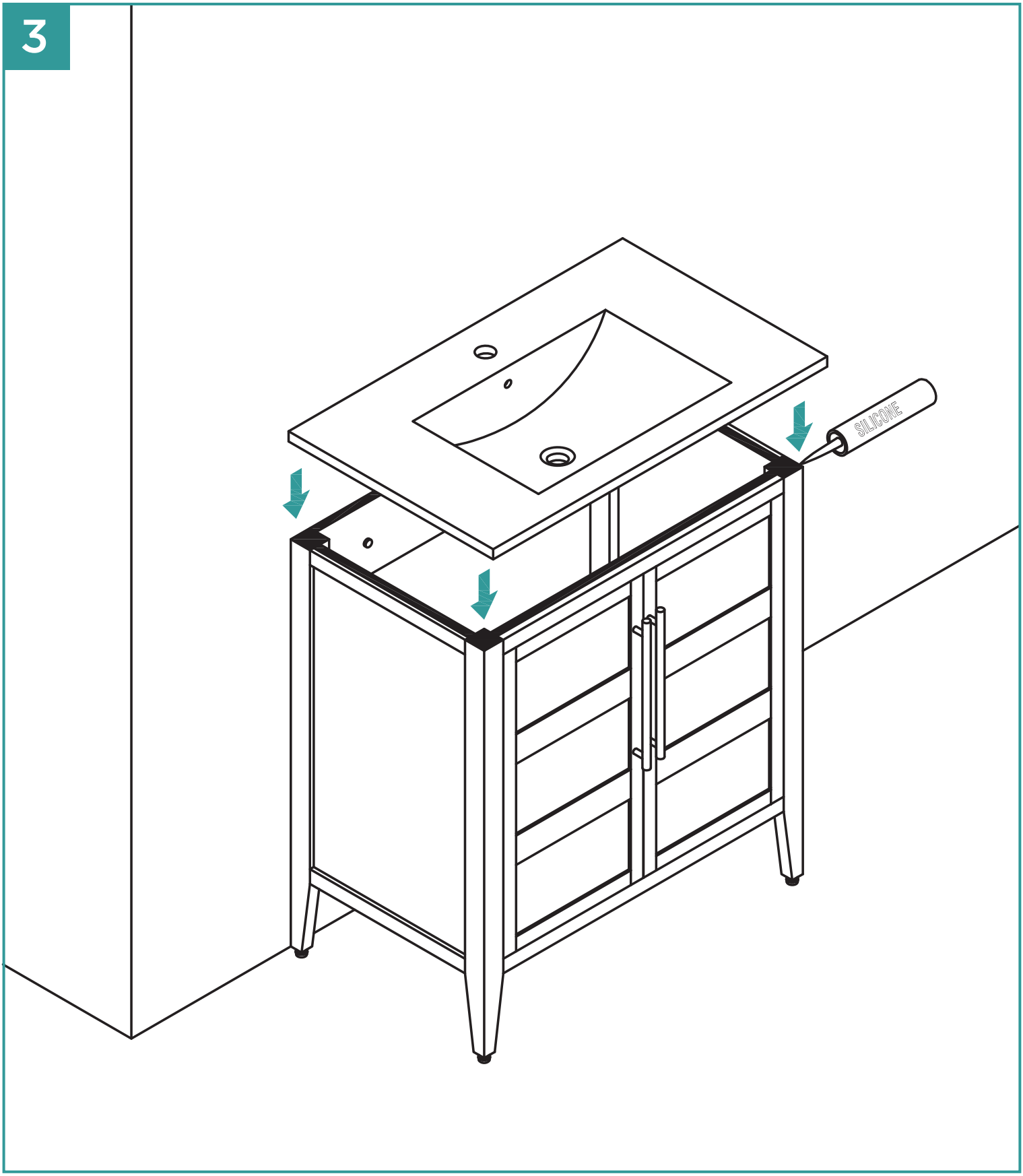

206 Wembly Road
New Windsor, NY 12553
Phone: 718.602.6060
Fax: 718.963.2082
info@finefixtures.com
www.finefixtures.com

4

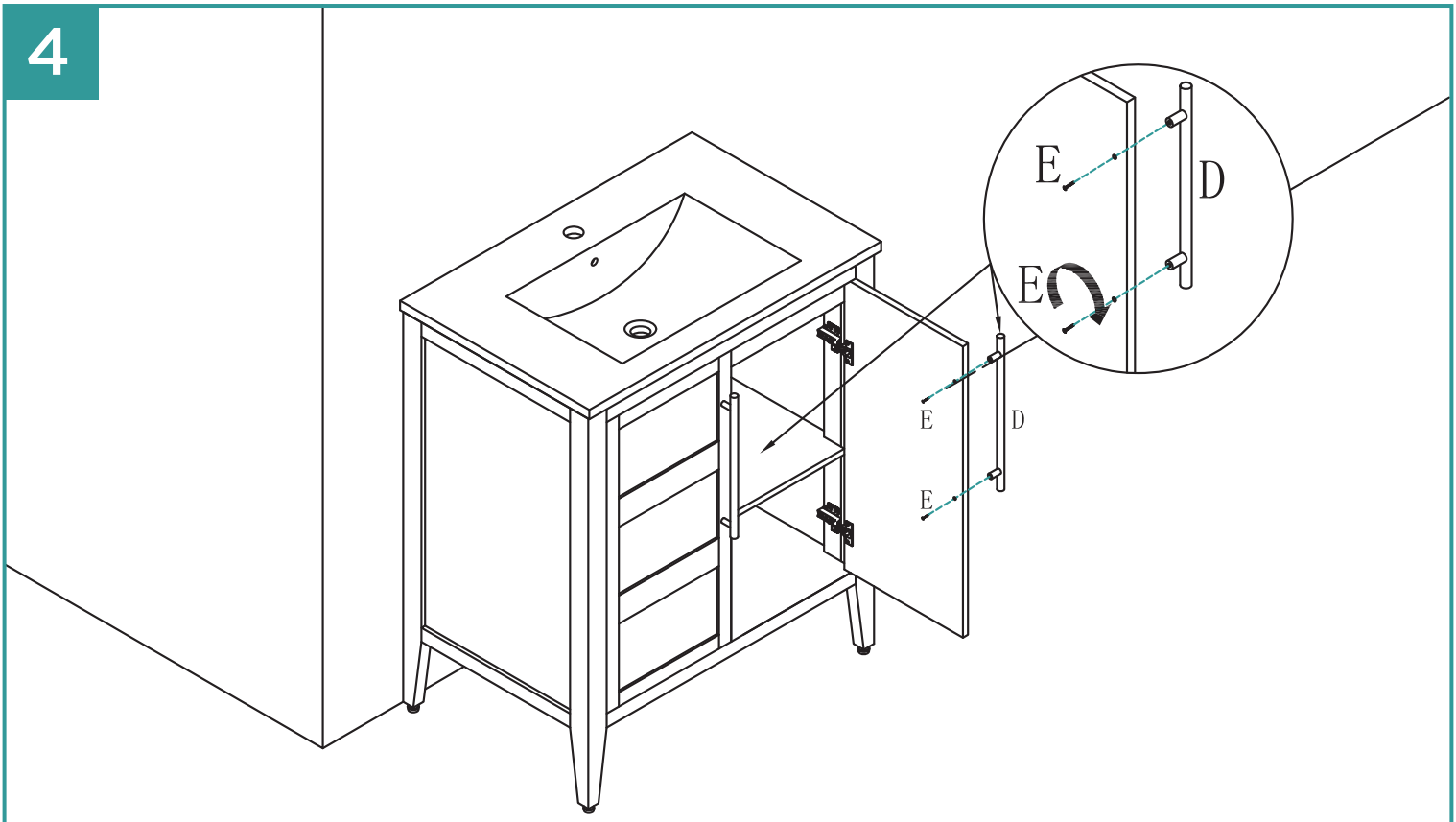

5

FINISHED

