SEDETA

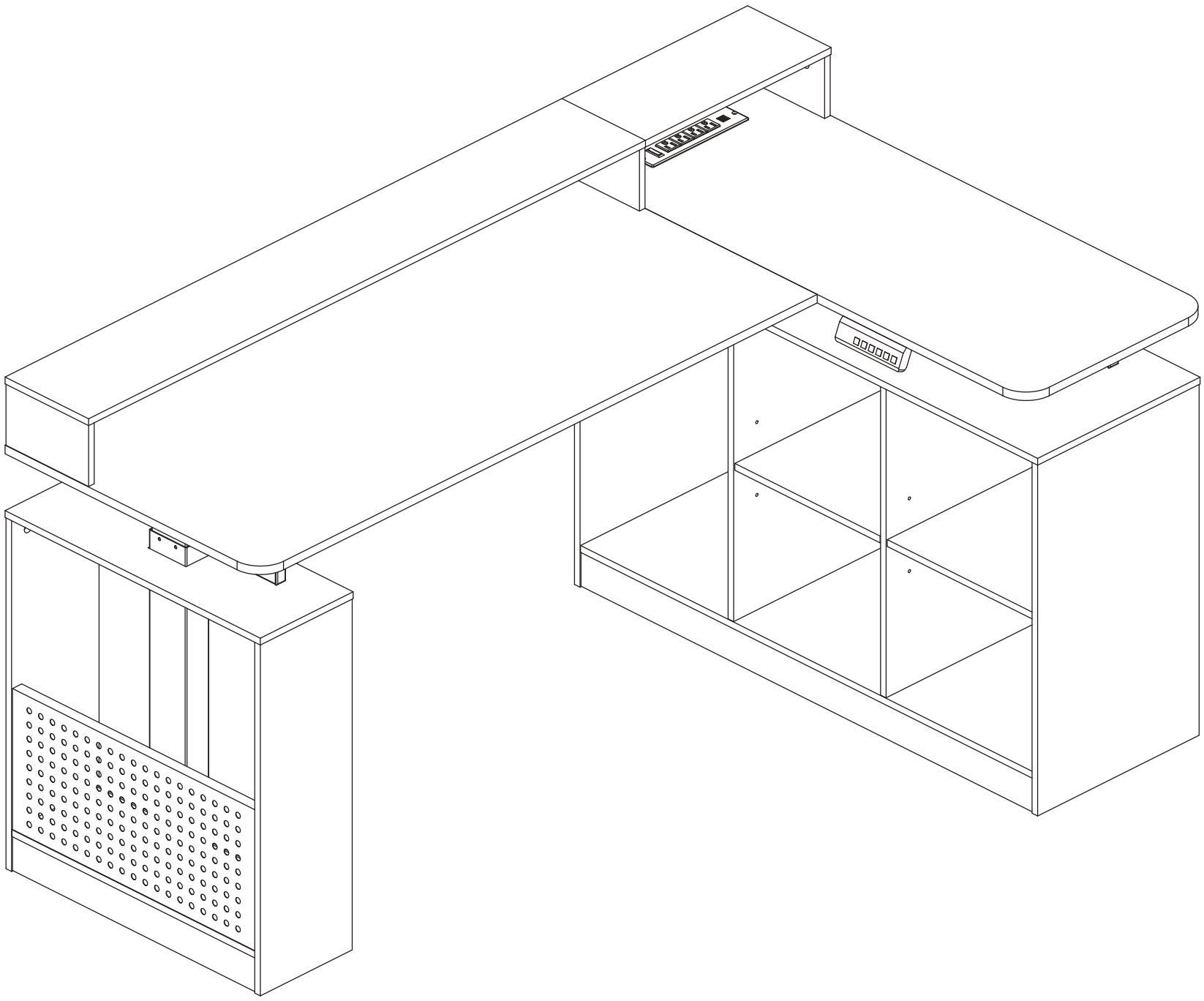

AJ-DJ505294

⚠ Please read this instruction manual carefully before using the product

Work Uniquely Play Unbound

Installation takes x 2~4hour

Package Contents

Plates and iron components	Assembly tool kit	Instruction manual

⚠ Precautions

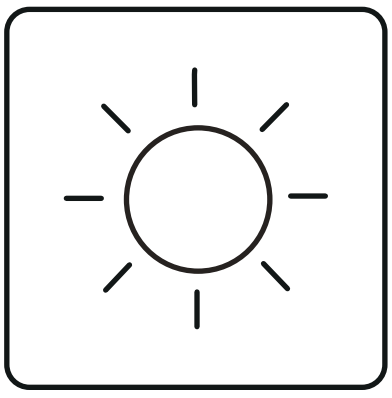

1.Avoid extended periods of direct sunlight exposure.

2.Stay away from fire.

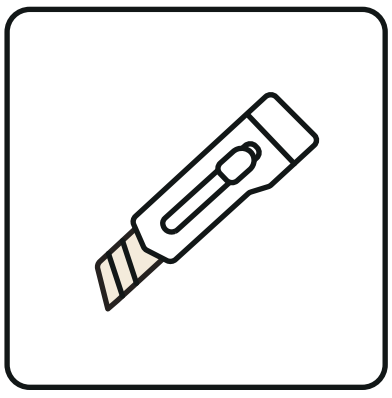

3.Keep away from sharp objects.

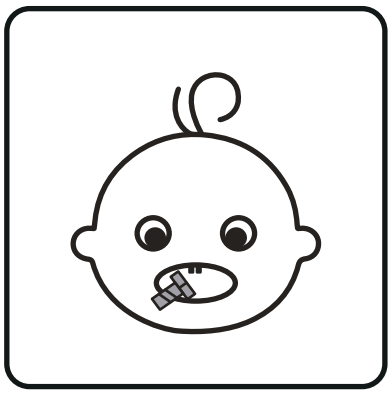

4.Keep infants and children away from assembly parts to avoid choking and suffocation.

5.Keep away from corrosive substances.

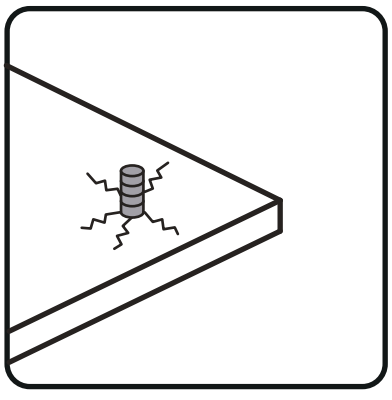

6. Pay attention to avoid over-tightening fasteners, as they may cause cracking within the board.

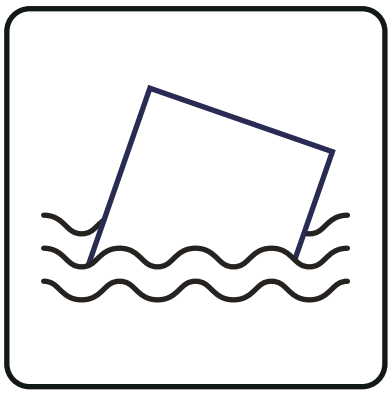

7.Prevent objects from being damaged by immersion in water.

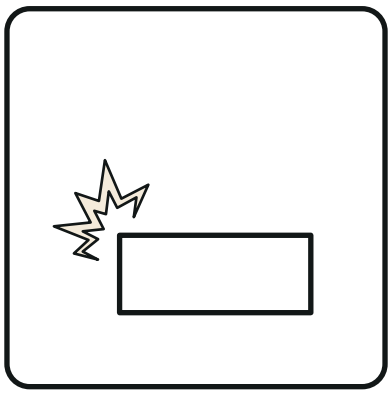

8.Prevent object collision and damage.

9.Be careful to avoid collisions.

⚠ Installation of Cams and Pins

Be sure to use the proper screws to avoid damaging the parts

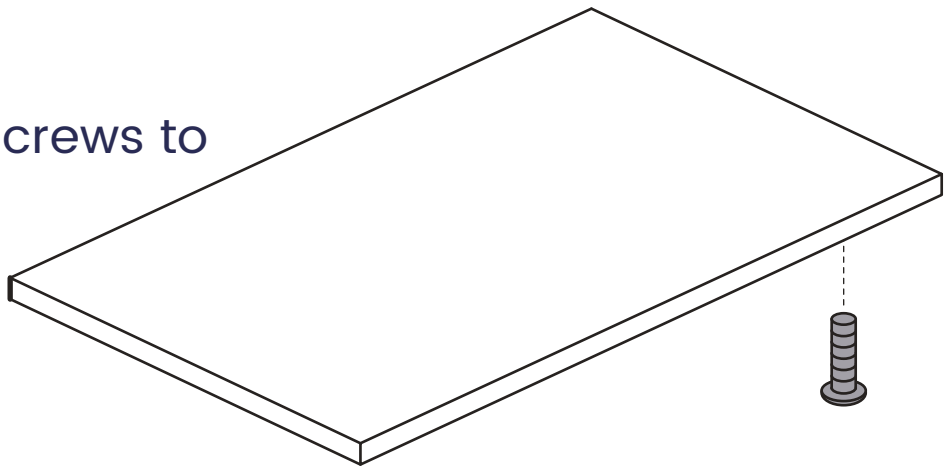

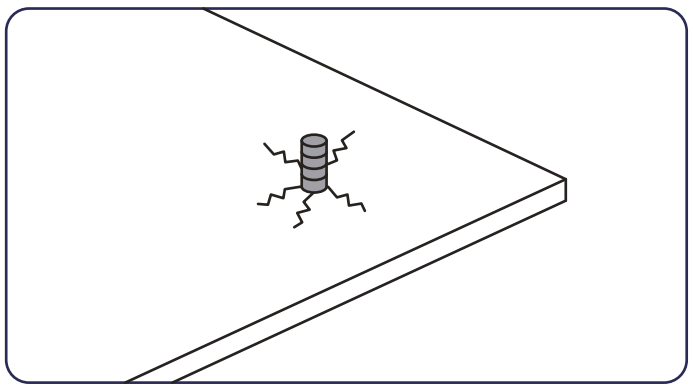

Wrong screws can cause the plank to crack

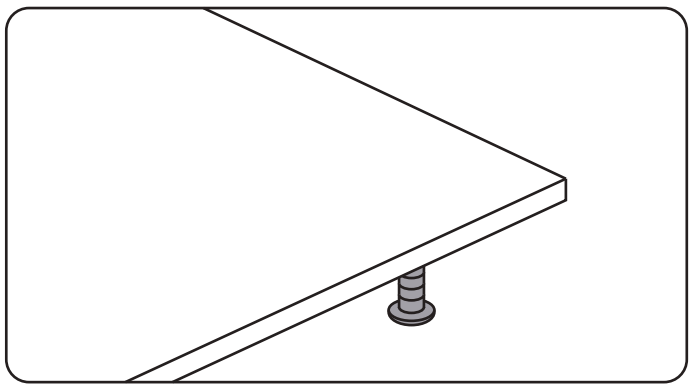

The right screw is the right size

⚠ Matters needing attention

1. When installing the screws in the installation step, the screws do not need to be tightened.

2. After this installation step is confirmed and the holes are aligned, then tighten all the screws.

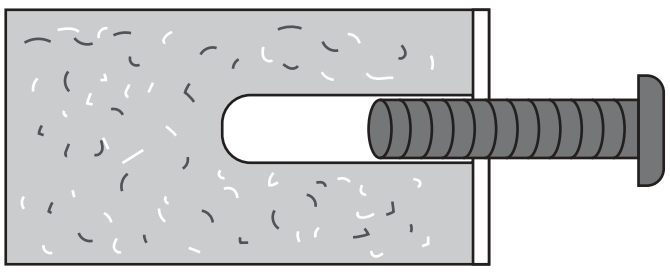

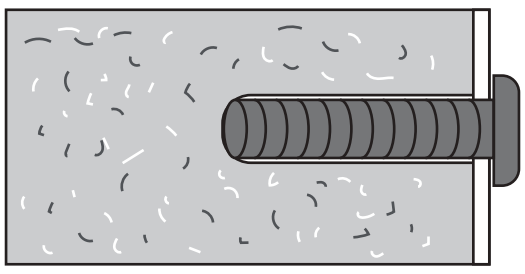

3. If the screws are tightened during the installation process, it will cause problems such as misalignment of the screw holes and misalignment of the board in subsequent installations

Disassembly Diagram

BOX A

4 x1 5 x1 6 x1 8 x1 18 x1 36 x1 38 x1 39 x1

40 x2 41 x1 42 x1 43 x2

BOX B

1 x1 2 x1 3 x1 7 x1 10 x1 11 x1 12 x1 15 x1

16 x1 19 x1 20 x1 21 x1 22 x1 23 x1 24 x1 25 x3

26 x2 27 x1 28 x1 29 x1 30 x1 31 x1 32 x1 33 x1

34 x1 35 x2

ACCESSORY BOX

9 x1 13 x1 14 x1 17 x1 37 x1 55 x2 A x4 B x25

C x12 D x19 E x12 F x27 G x8 H x12 I x3 J x3

K x3 L x27 M x30 N x9 O x49 P x53 Q x1 R x1

S x9 T x9 U x3 V x3 W x2 X x18 Y x1 Z x1

Disassembly Diagram

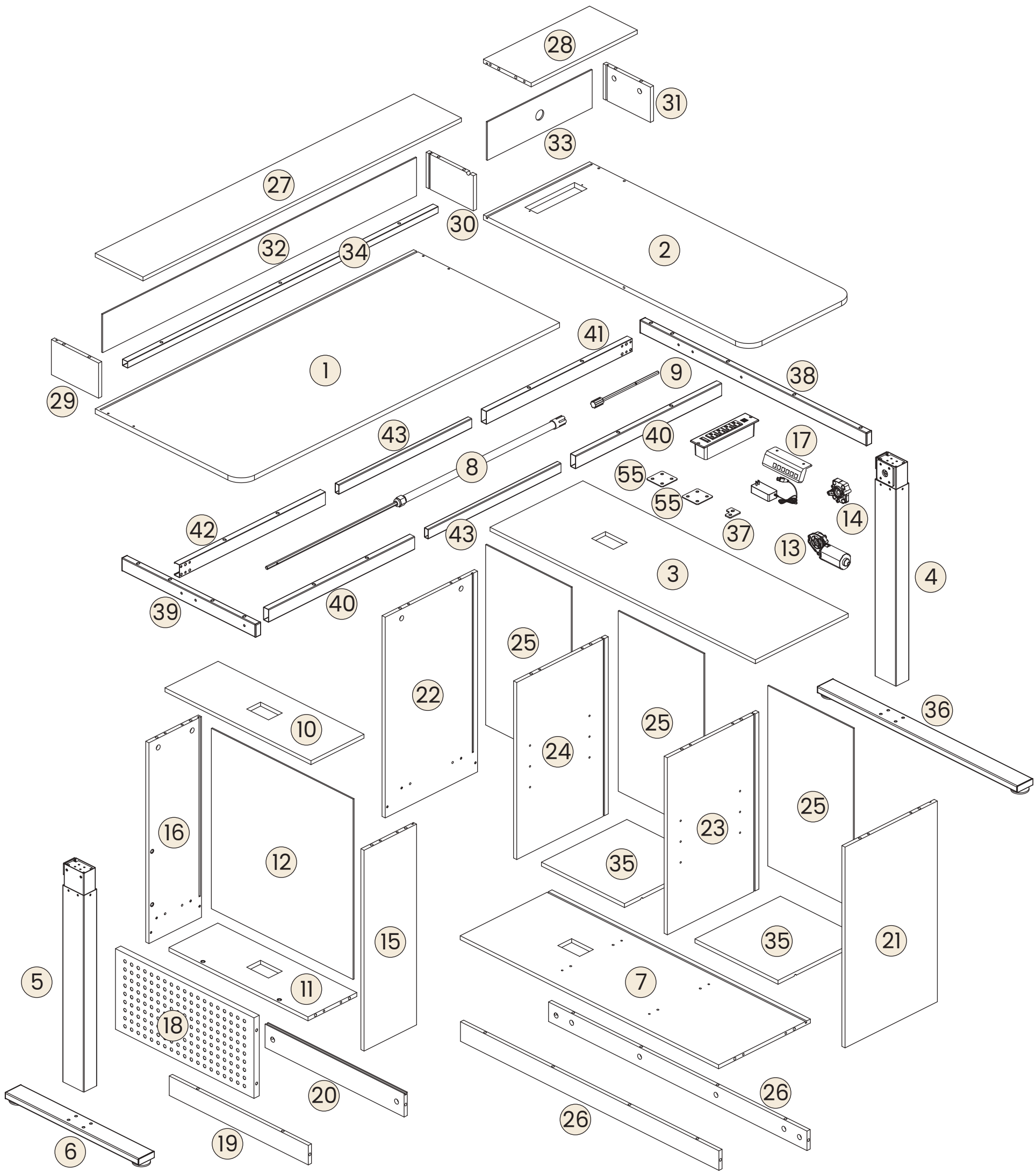

Package Contents

01

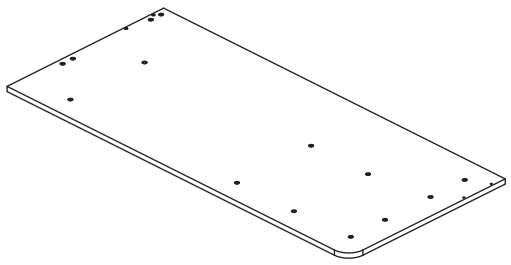

02

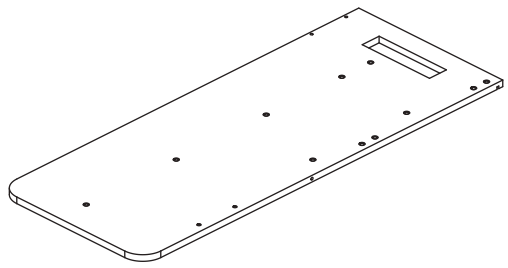

03

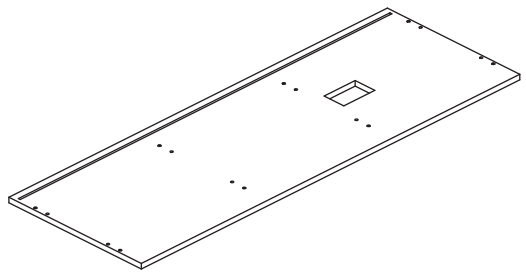

04

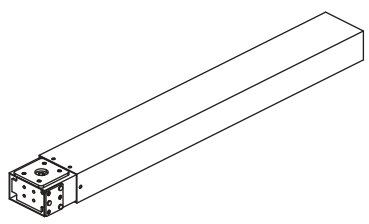

05

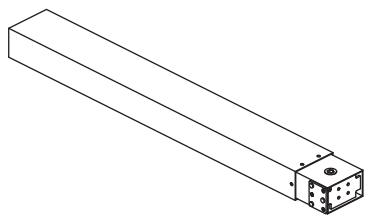

06

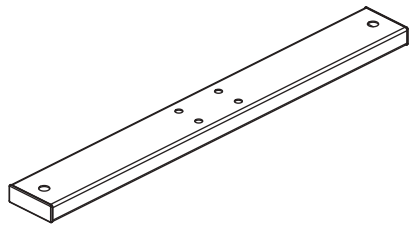

07

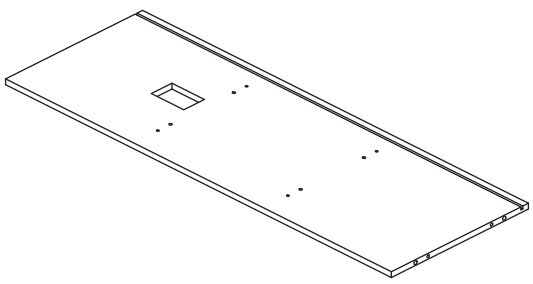

08

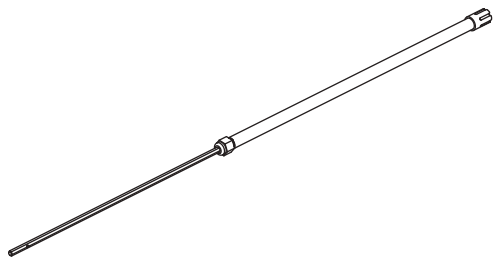

09

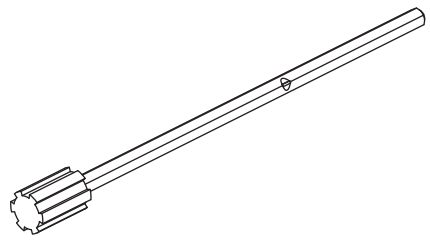

10

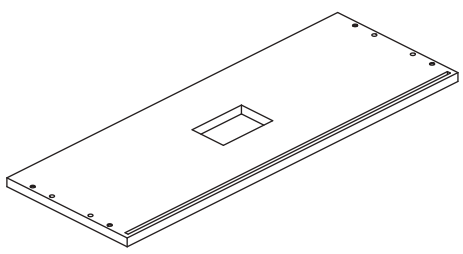

11

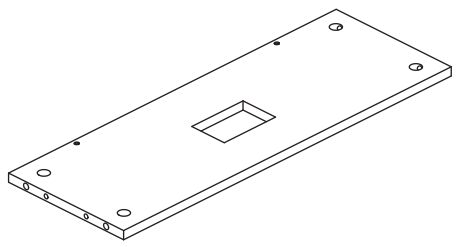

12

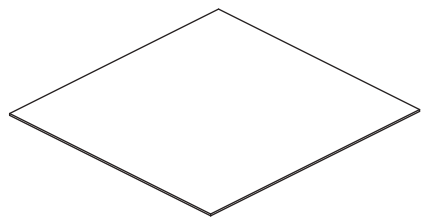

13

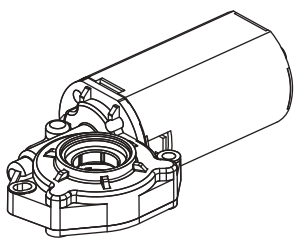

14

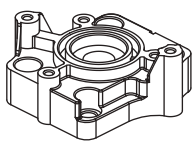

15

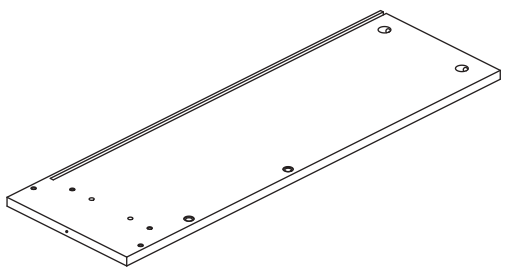

Package Contents

16

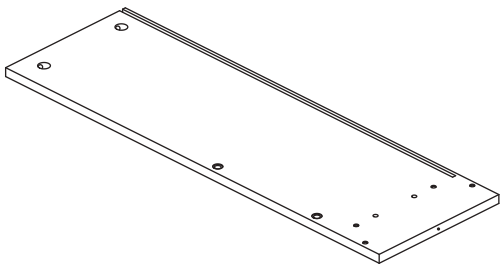

17

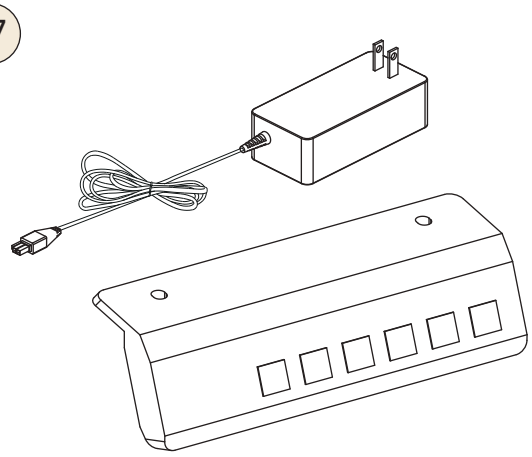

18

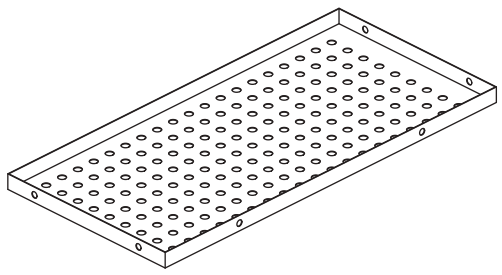

19

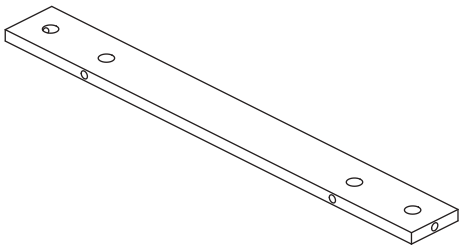

20

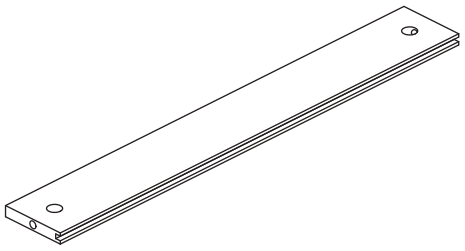

21

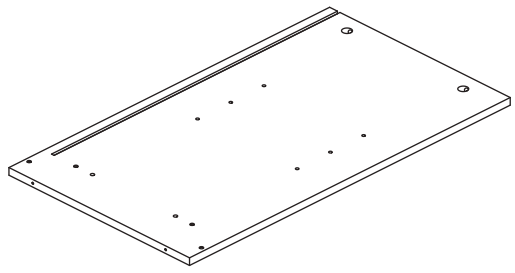

22

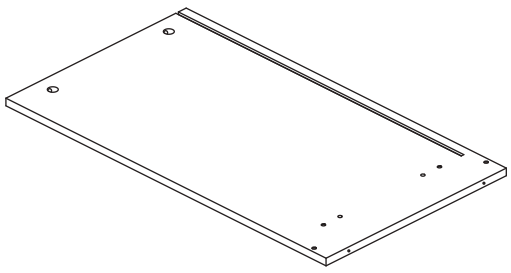

23

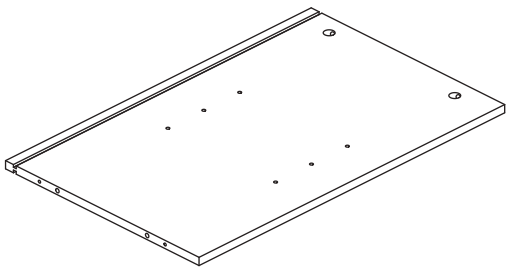

24

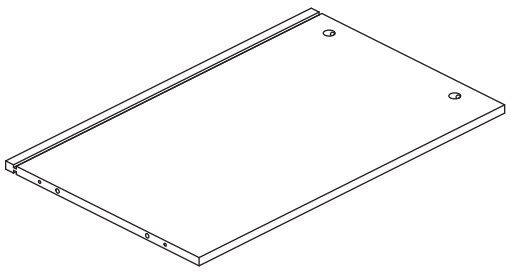

25 x3

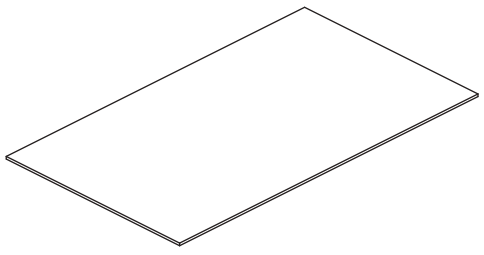

26 x2

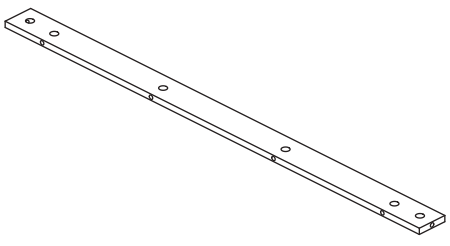

27

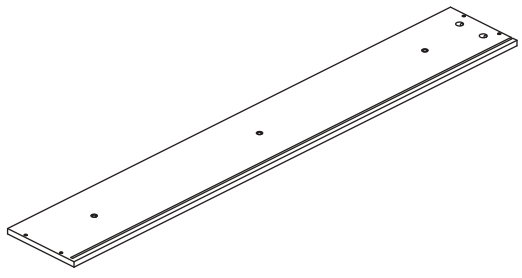

28

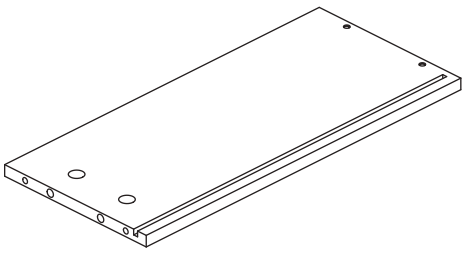

29

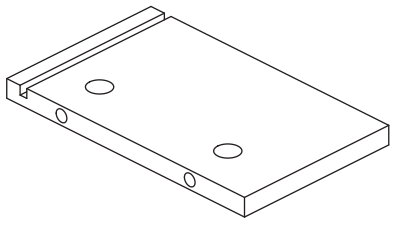

30

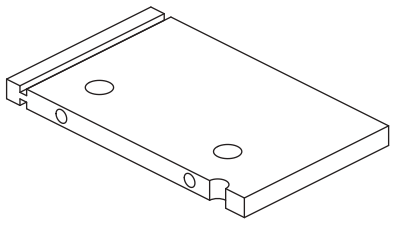

Package Contents

31

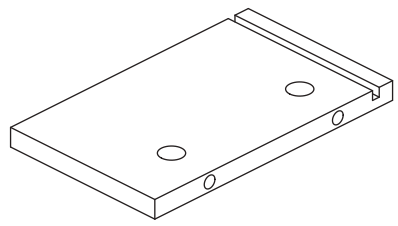

32

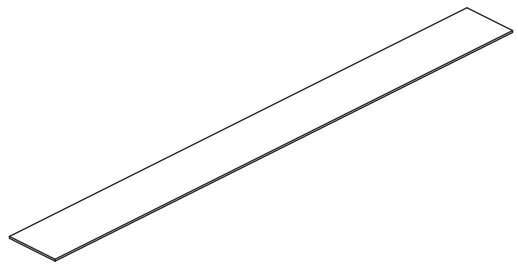

33

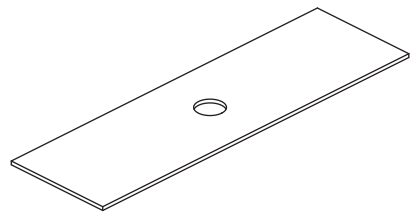

34

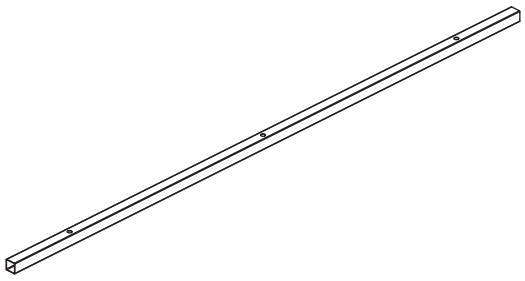

35 x2

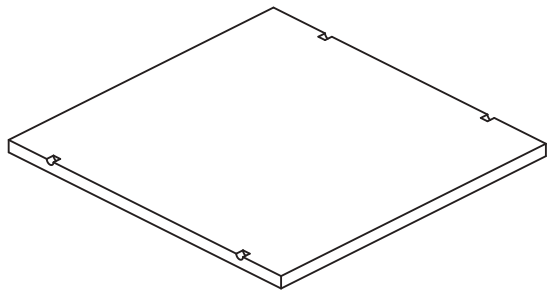

36

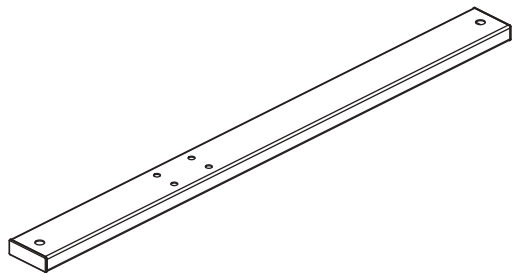

37

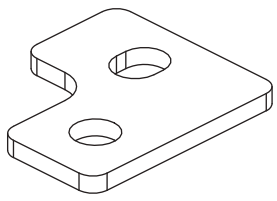

38

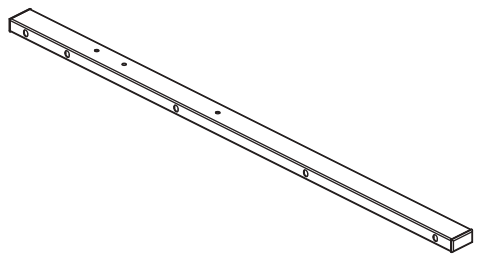

39

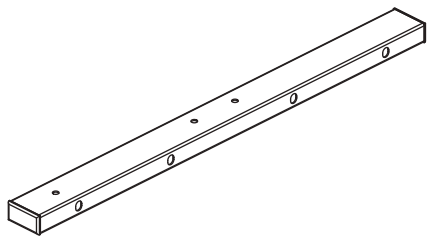

40 x2

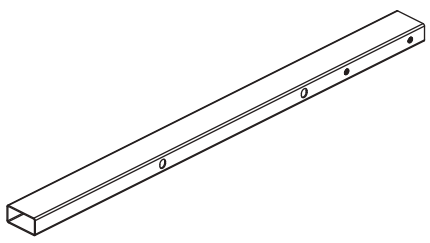

41

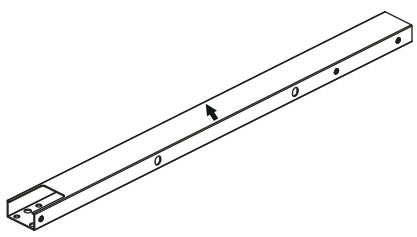

42

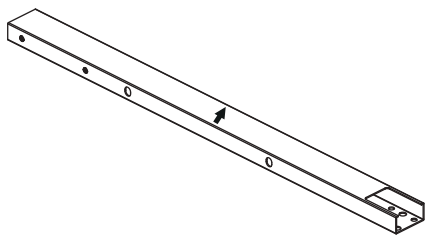

43 x2

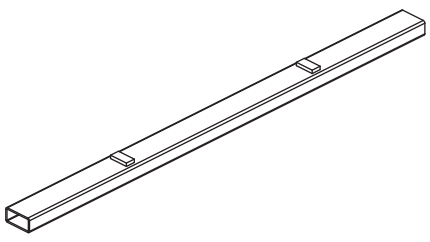

55 x2

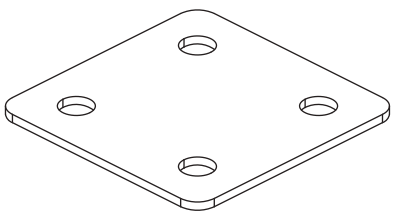

Tool sheet

A x4	**B** x23+2 M6x10MM	**C** x10+2 M6x10MM	**D** x17+2 M6x48MM
E x10+2 ST5x40MM	**F** x24+3 ST4x14MM	**G** x7+1 M6x28MM	**H** x10+2 M6x40MM
I x2+1 ST4x25MM	**J** x2+1 ST4x12MM	**K** x2+1 M4x12MM	**L** x24+3
M x27+3 Ø6x30MM	**N** x8+1 Ø5MM	**O** x44+5	**P** x48+5
Q x1	**R** x1	**S** x8+1 Ø20MM	**T** x8+1
U x3	**V** x3	**W** x2	**X** x16+2

Tool sheet

Y x1 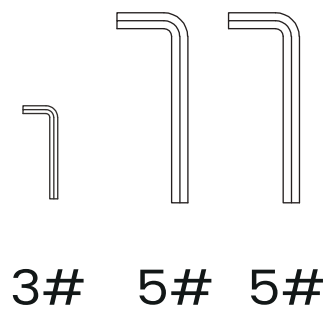 3# 5# 5#	**Z** x1 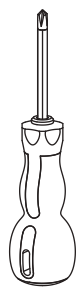		

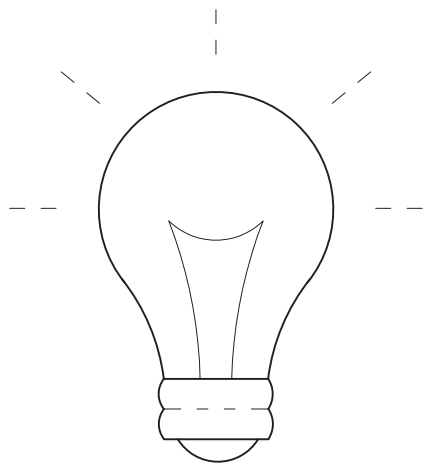

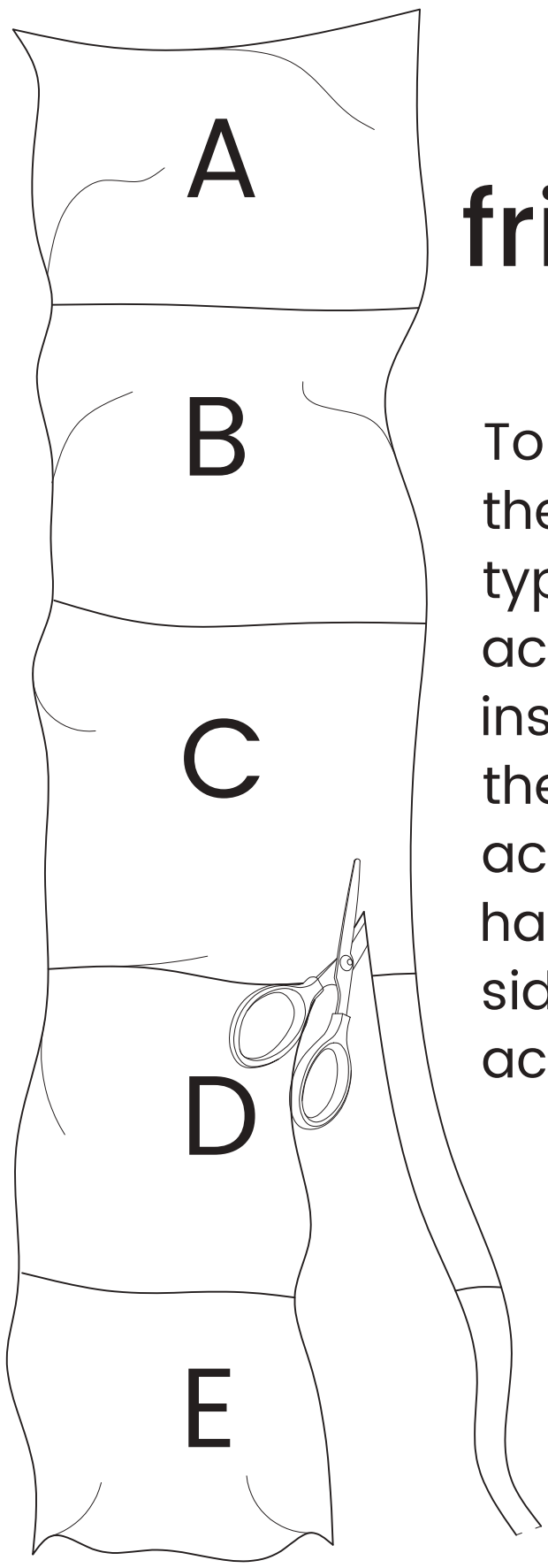

friendly reminder

To avoid errors and confusion during the installation of accessories, use the type and quantity of hardware accessories according to the installation procedure described in the instructions. First, unroll the accessories bag and lay out the hardware accessories, cut holes in the side, and take out the hardware accessories

Assembly Instruction

1

Pay attention to the hole position

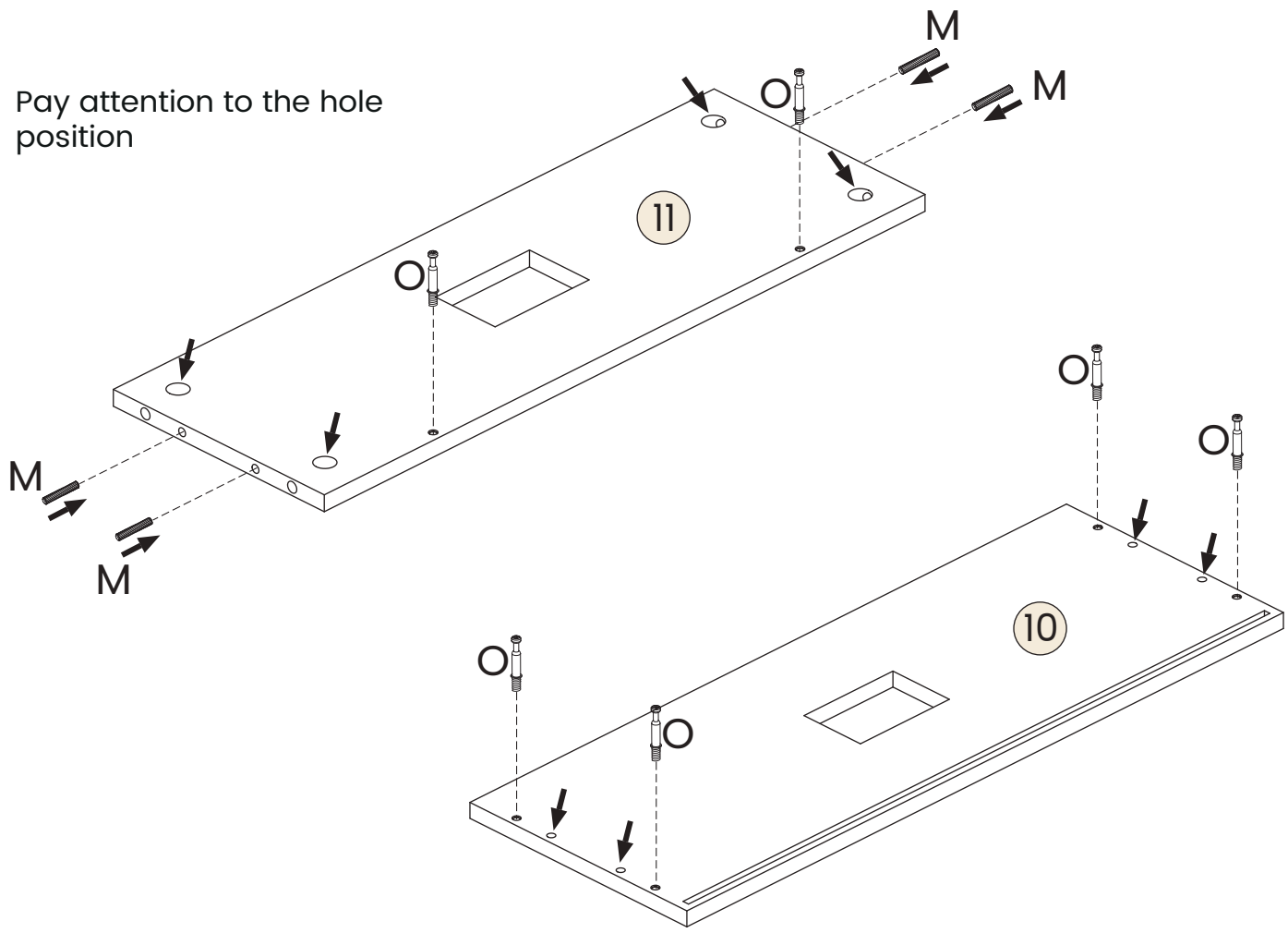

O x6

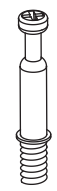

M x4

Ø6x30MM

2

P x2

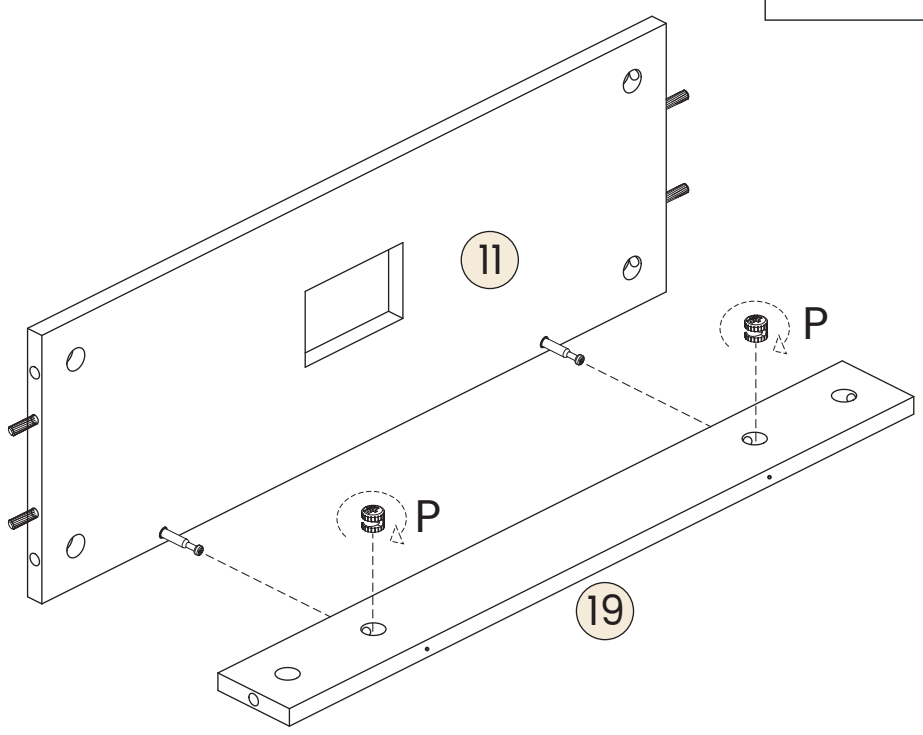

Installation instructions for eccentric rod

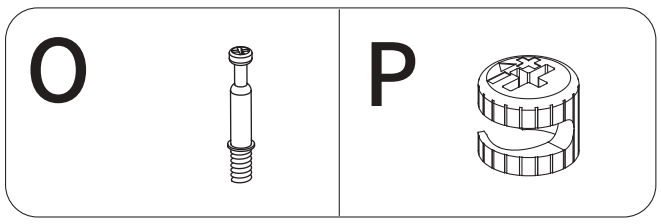

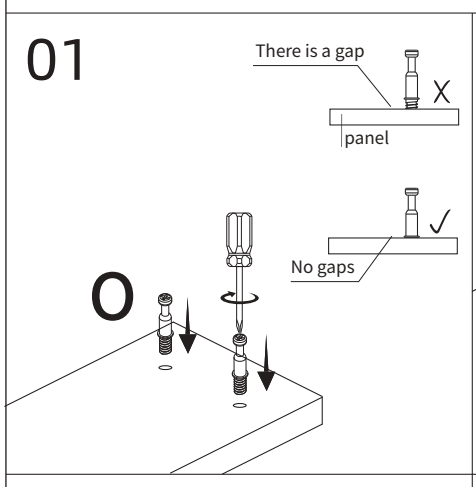

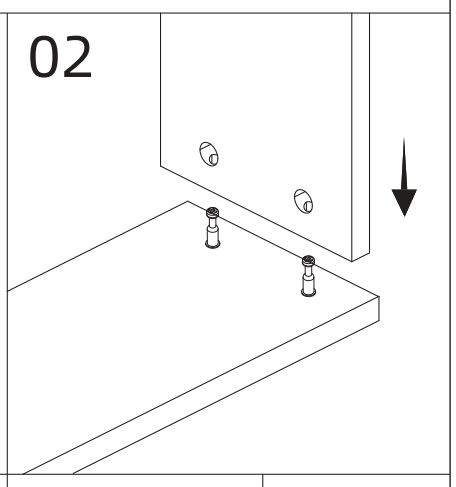

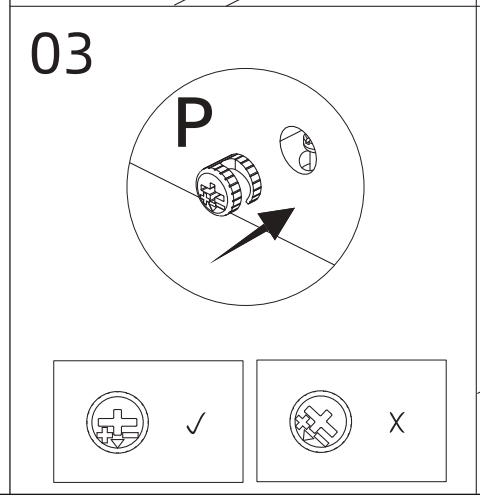

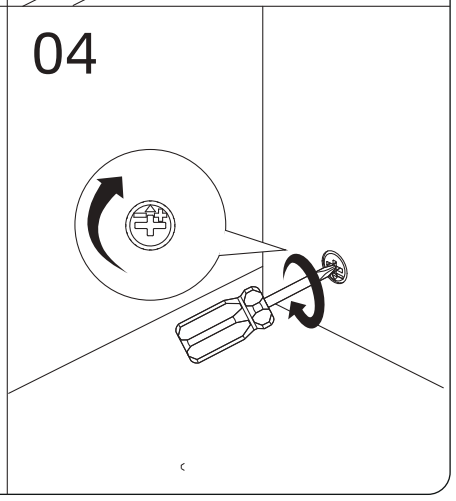

3

O x8

Pay attention to the hole position

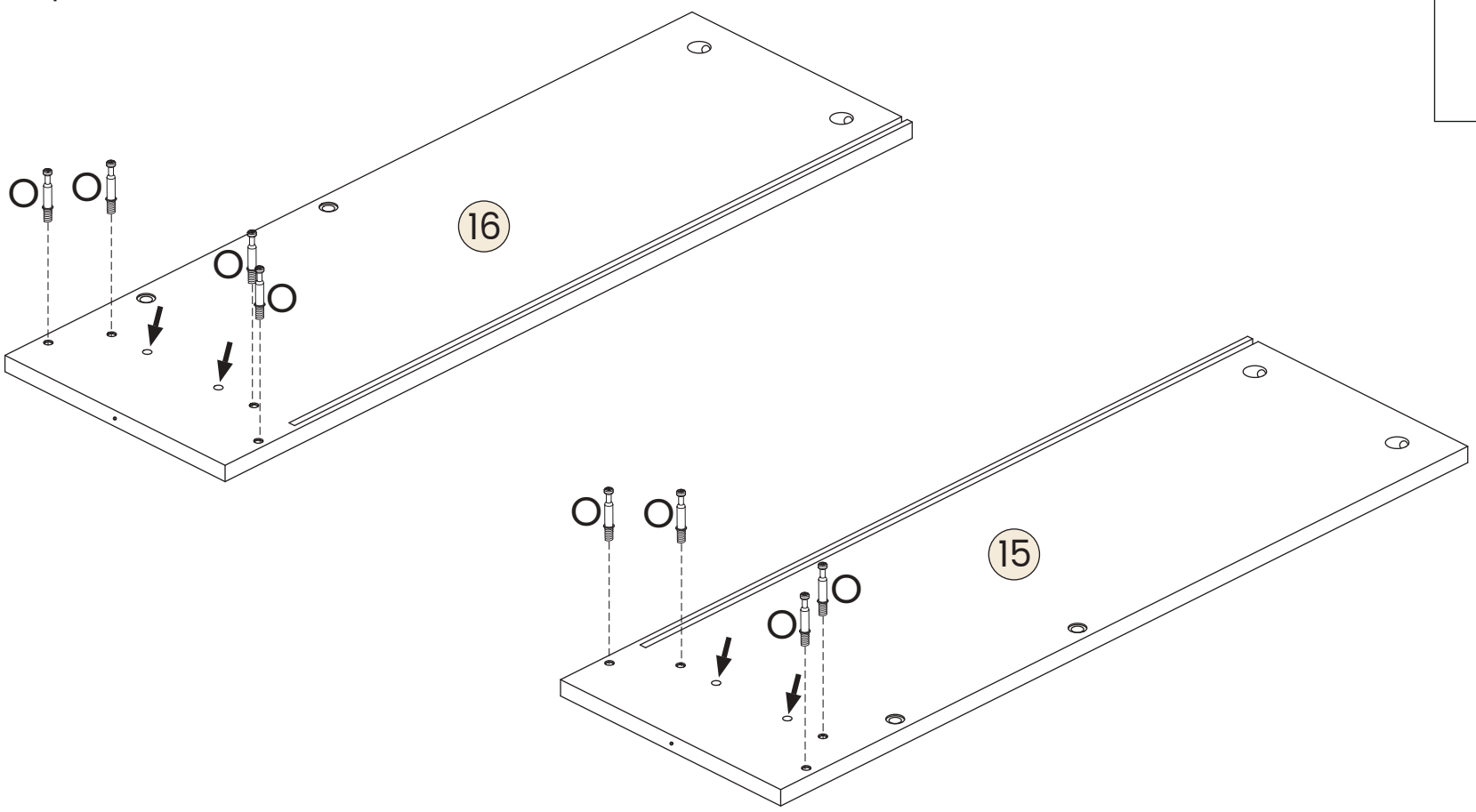

4

P x1

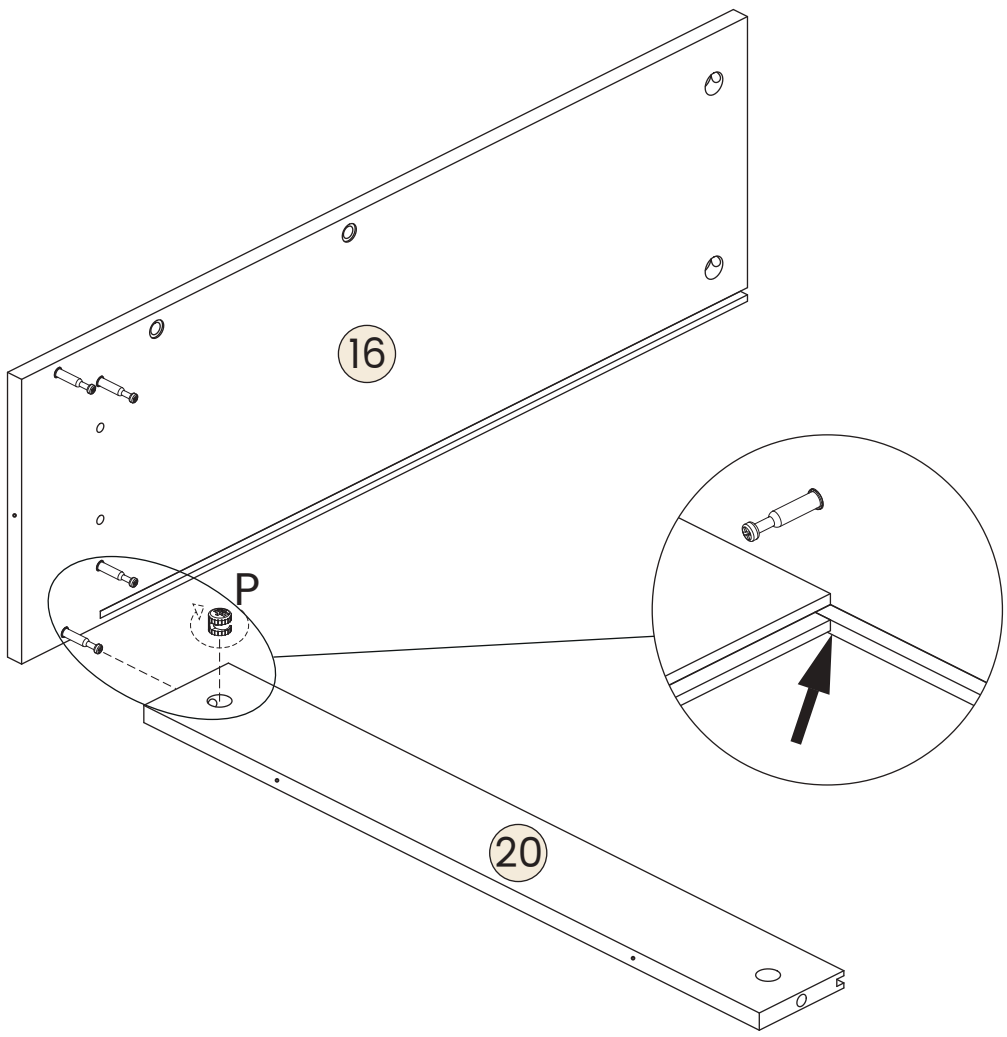

Pay attention to aligning the slots

5

P x3

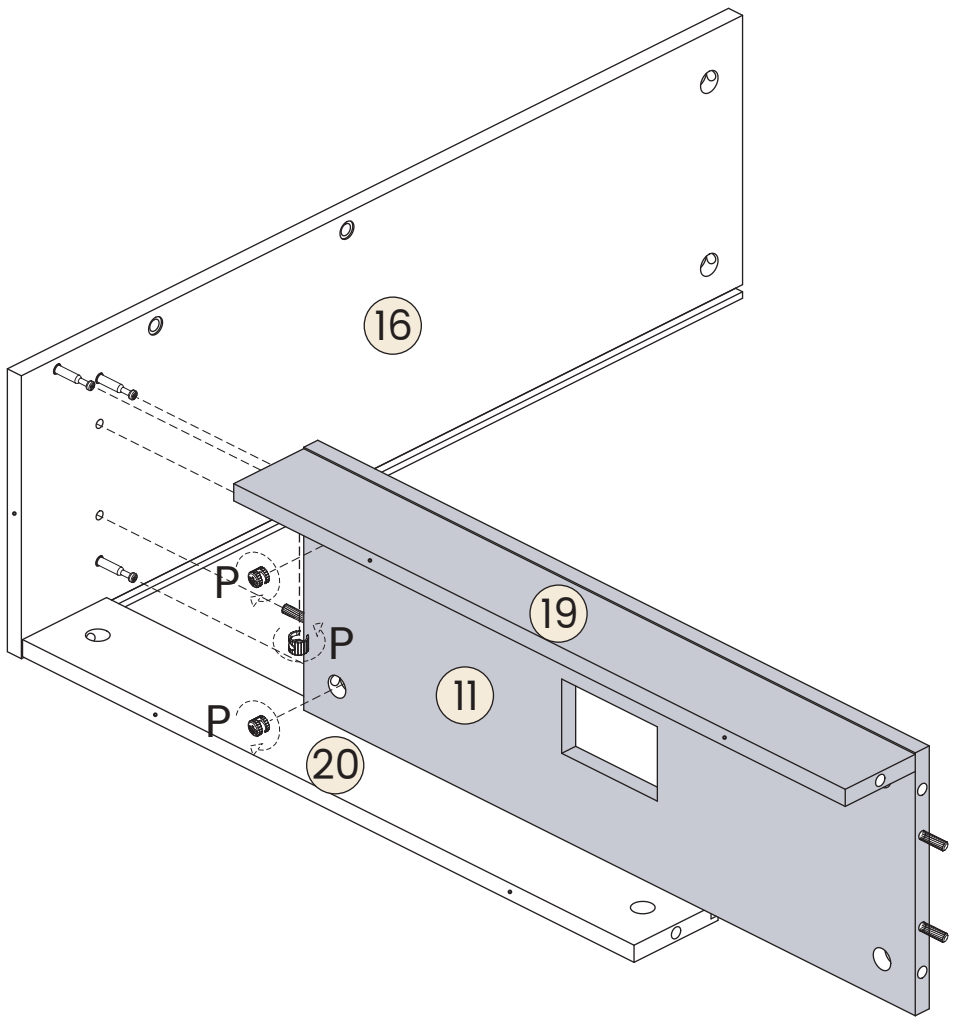
16
P
P
P
19
11
20

6

P x4

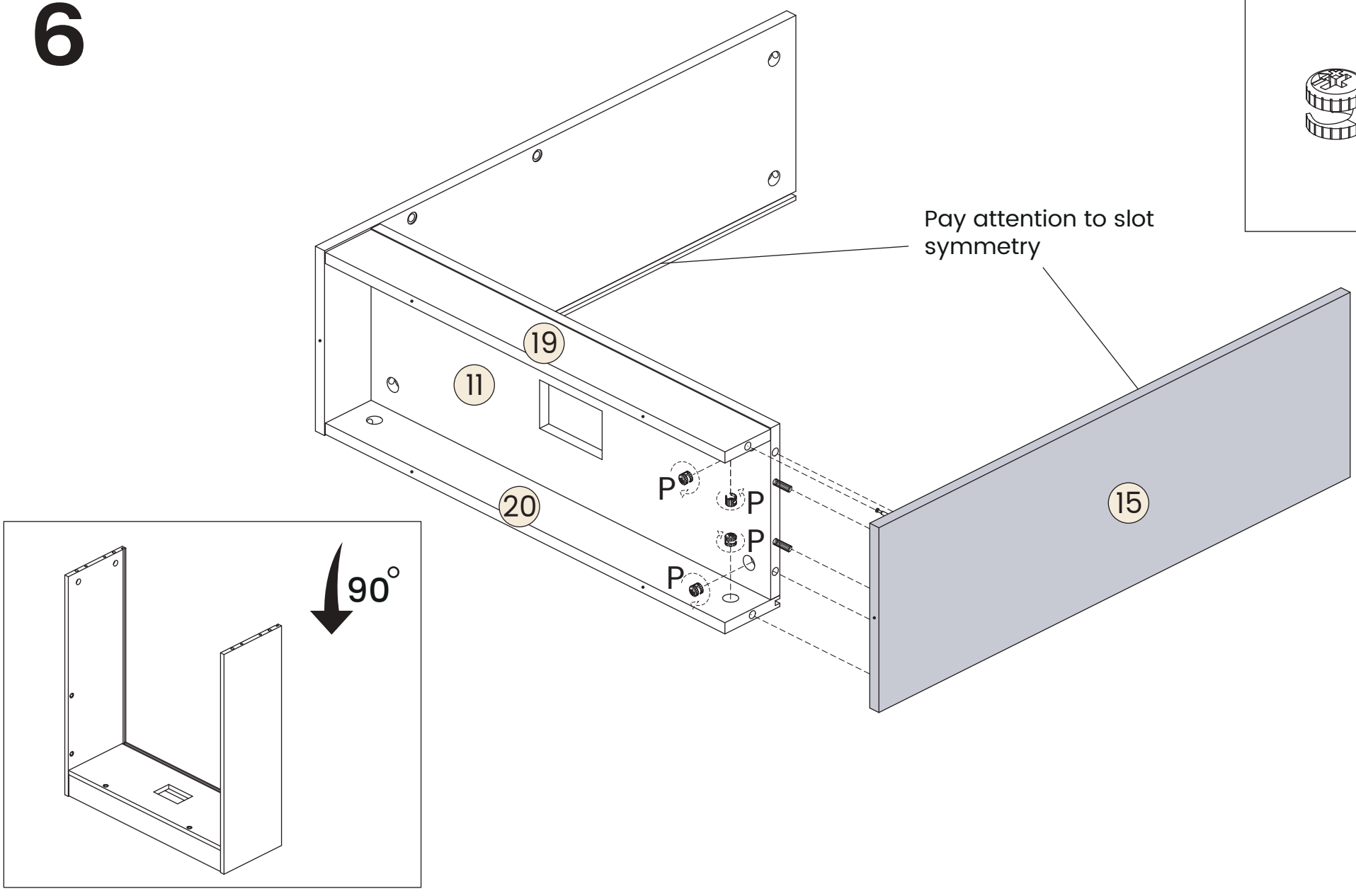
Pay attention to slot symmetry
19
11
20
P
P
P
P
15
90°

7

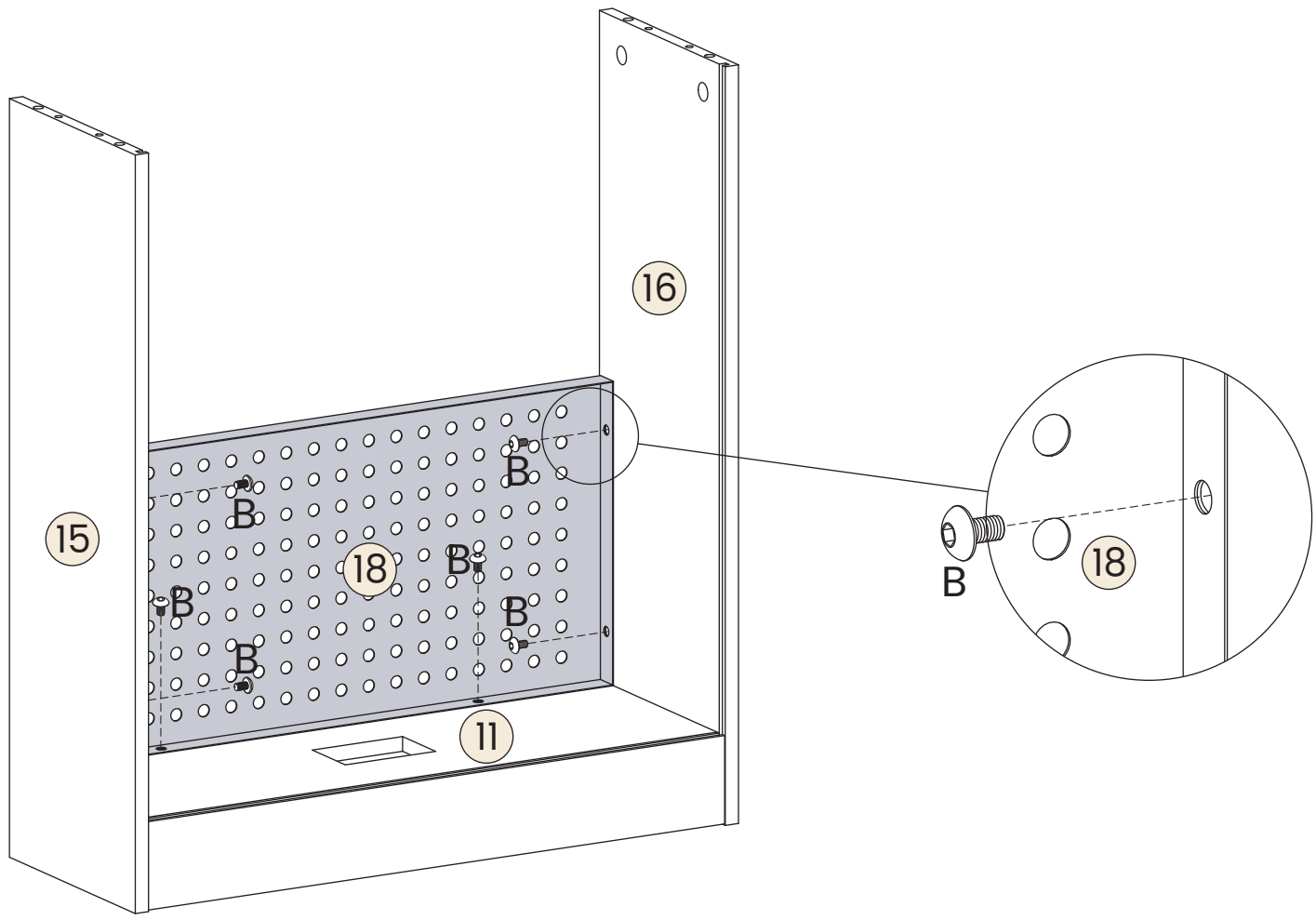

8

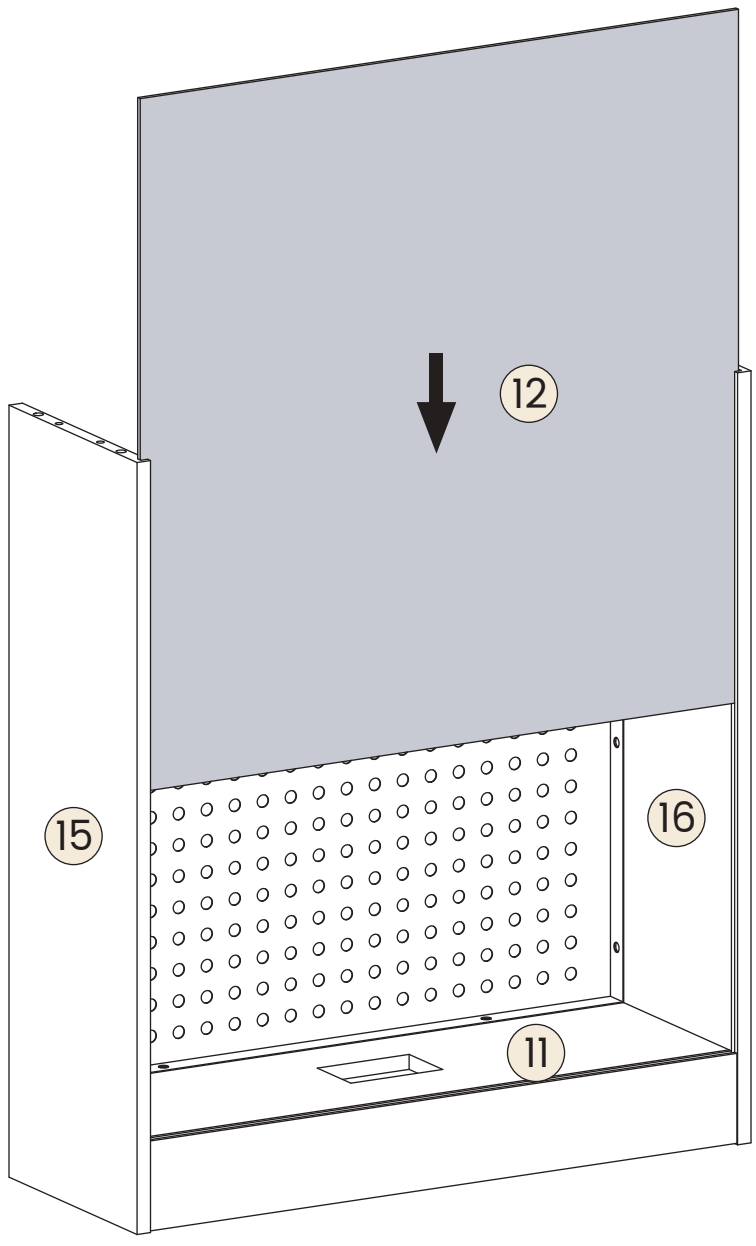

Assembly Instruction

9

Pay attention to the position of the slot

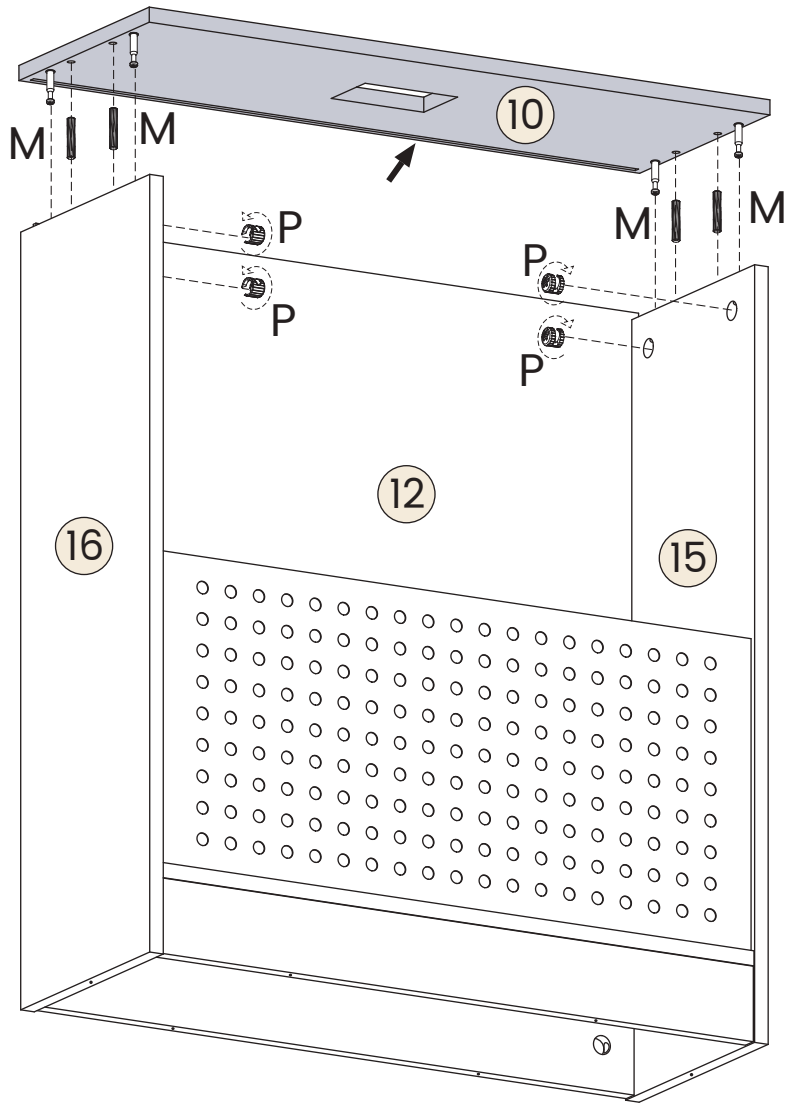

M x4

Ø6x30MM

P x4

10

Pay attention to aligning the slots

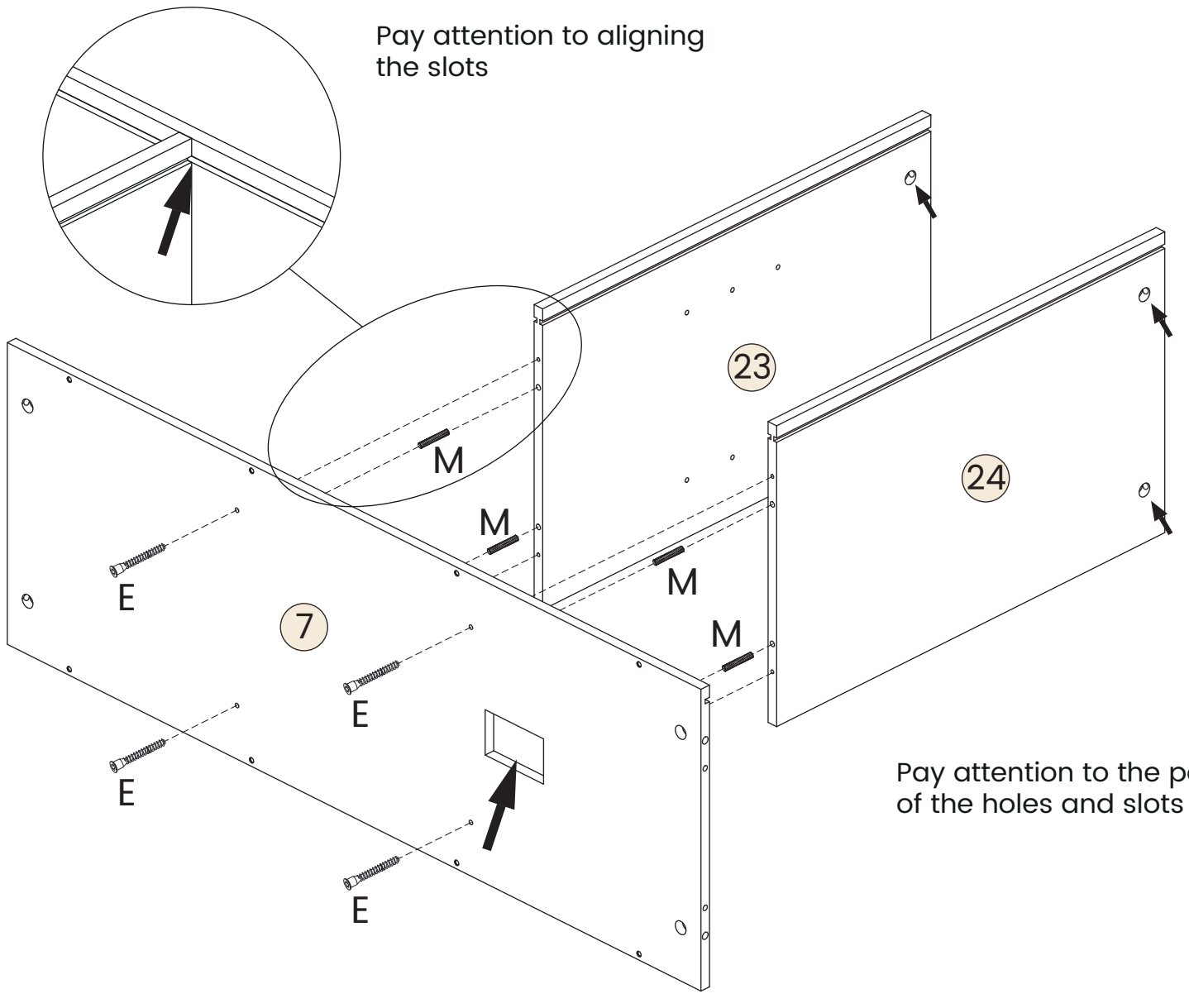

Pay attention to the positions of the holes and slots

E x4

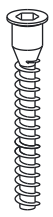

ST5X40MM

M x4

Ø6x30MM

11

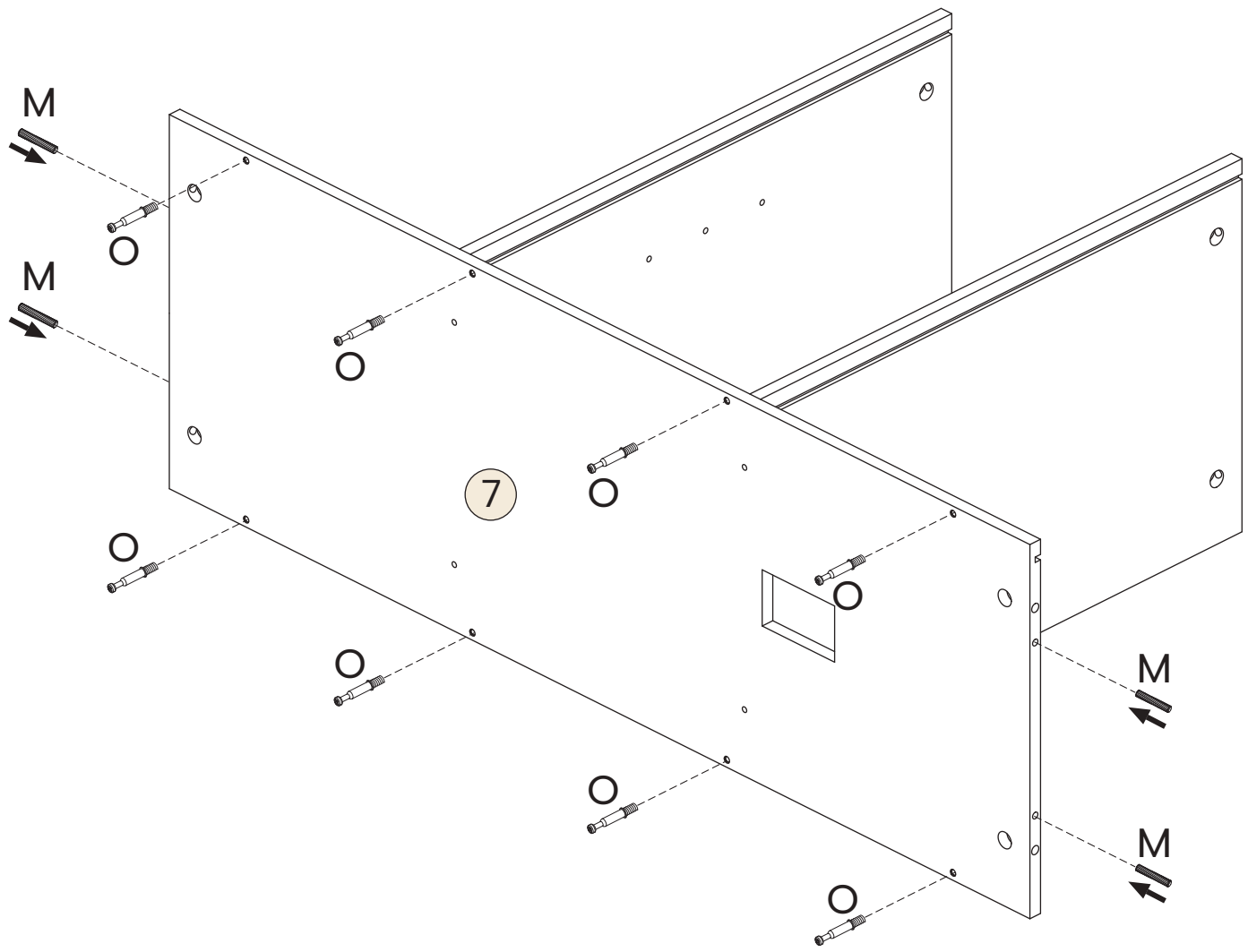

O x8

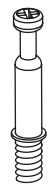

M x4

Ø6x30MM

12

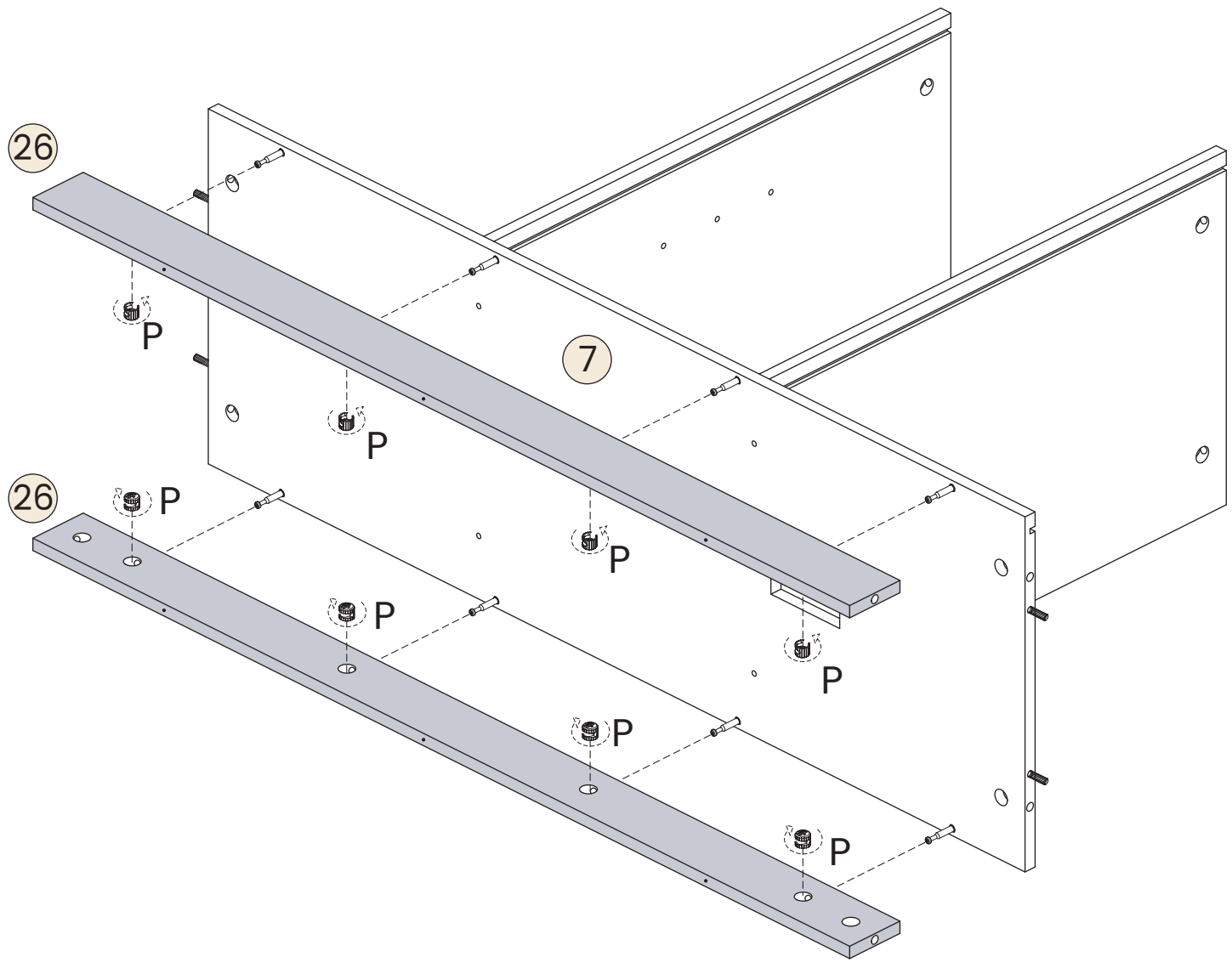

P x8

13

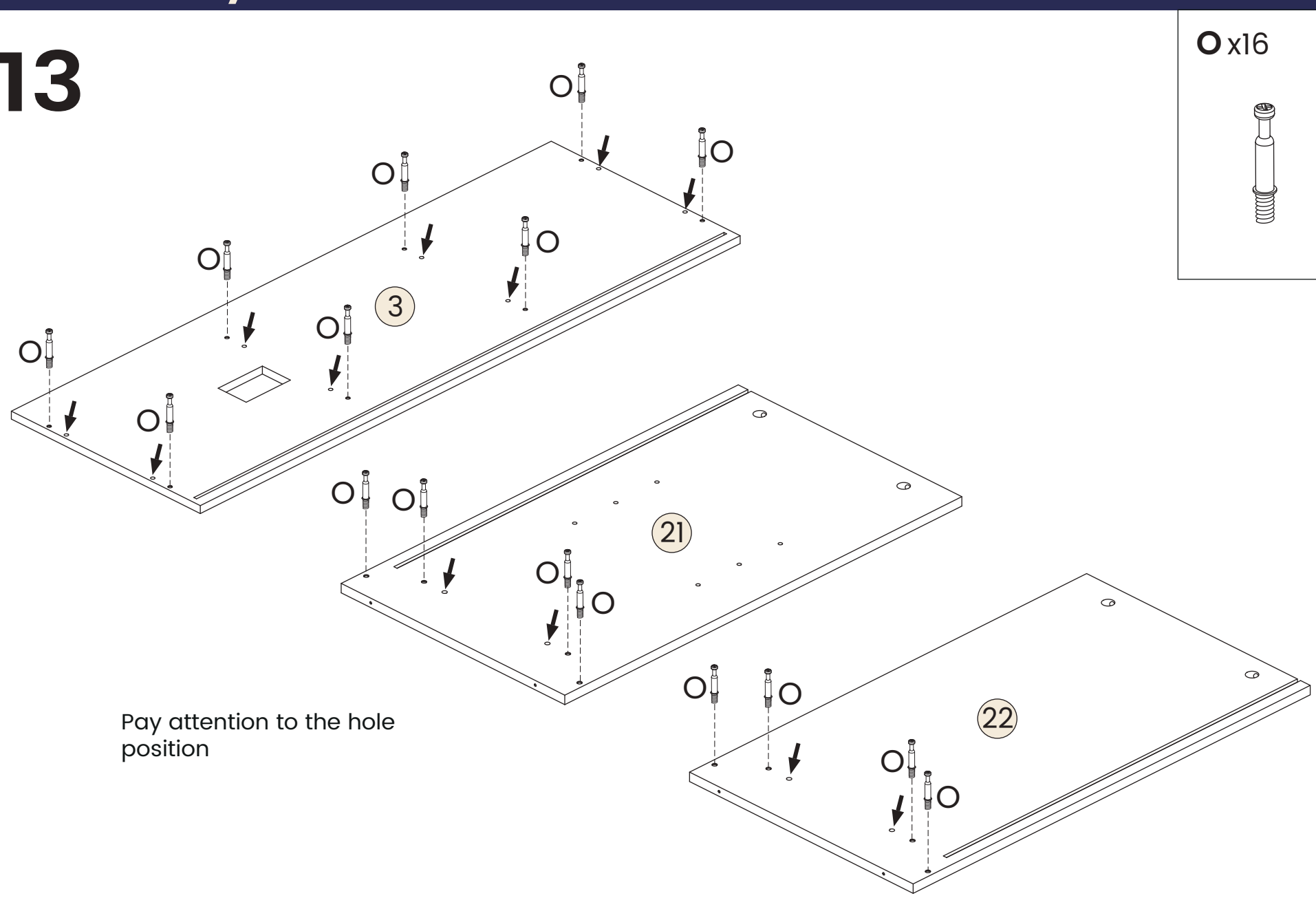
O x16
3
21
22
Pay attention to the hole position

14

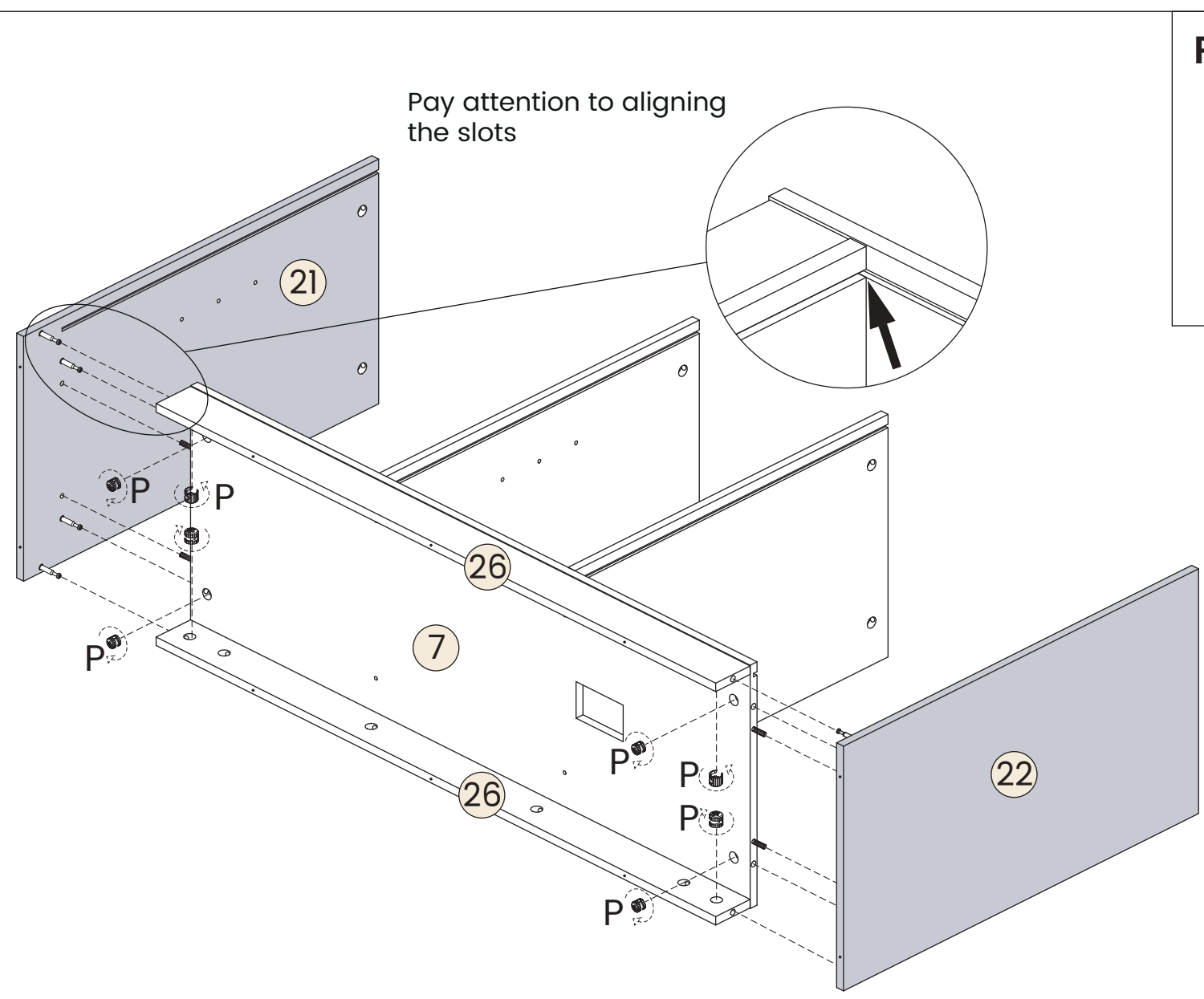
P x8
Pay attention to aligning the slots
21
P
P
P
26
7
26
P
P
P
P
22

15

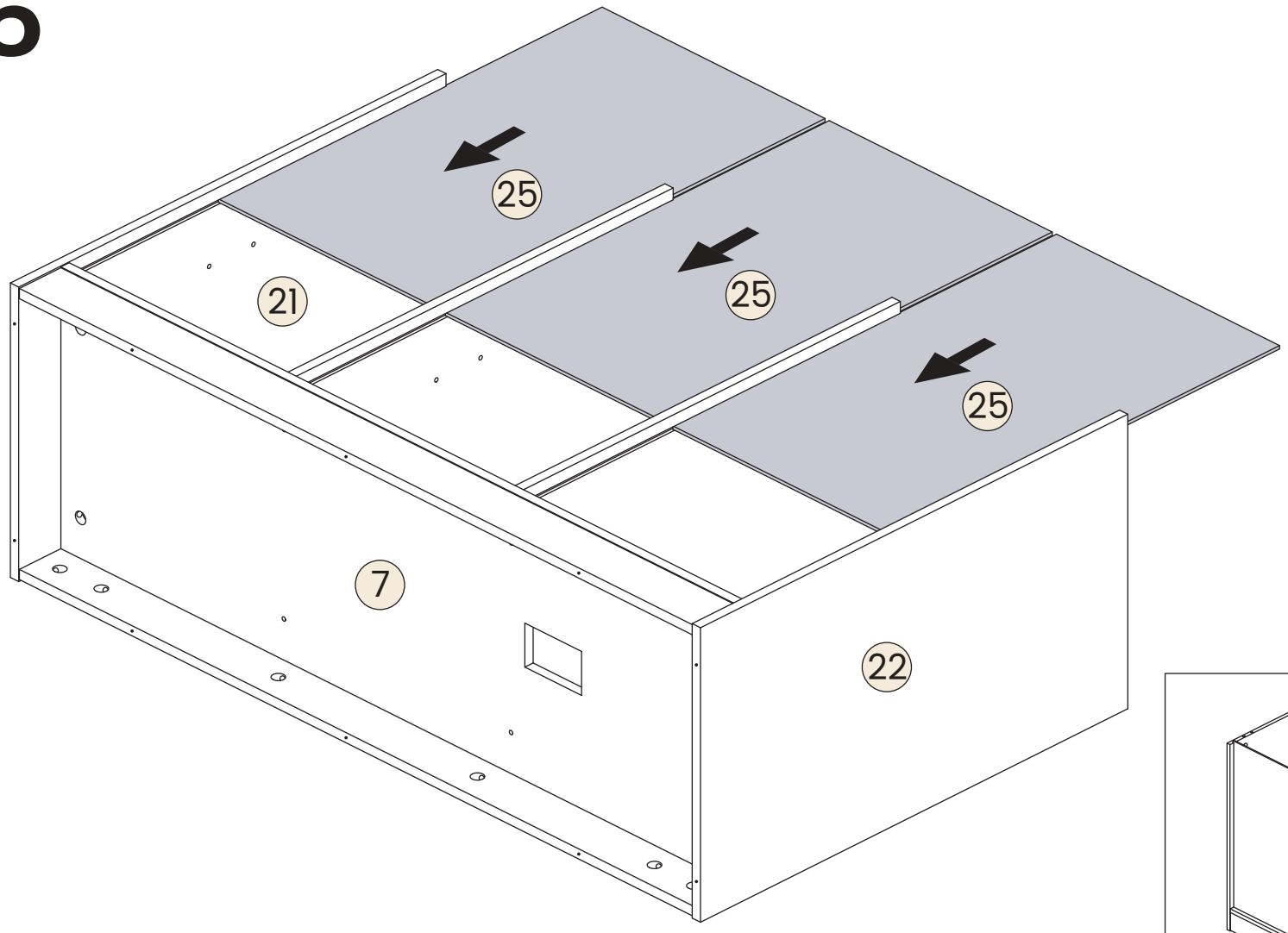

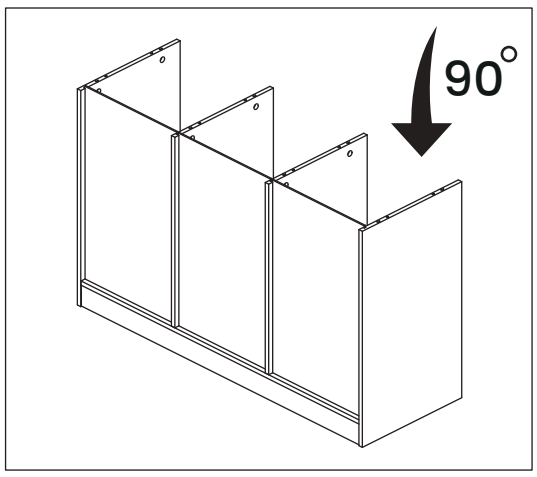

16

Pay attention to the position of the slot

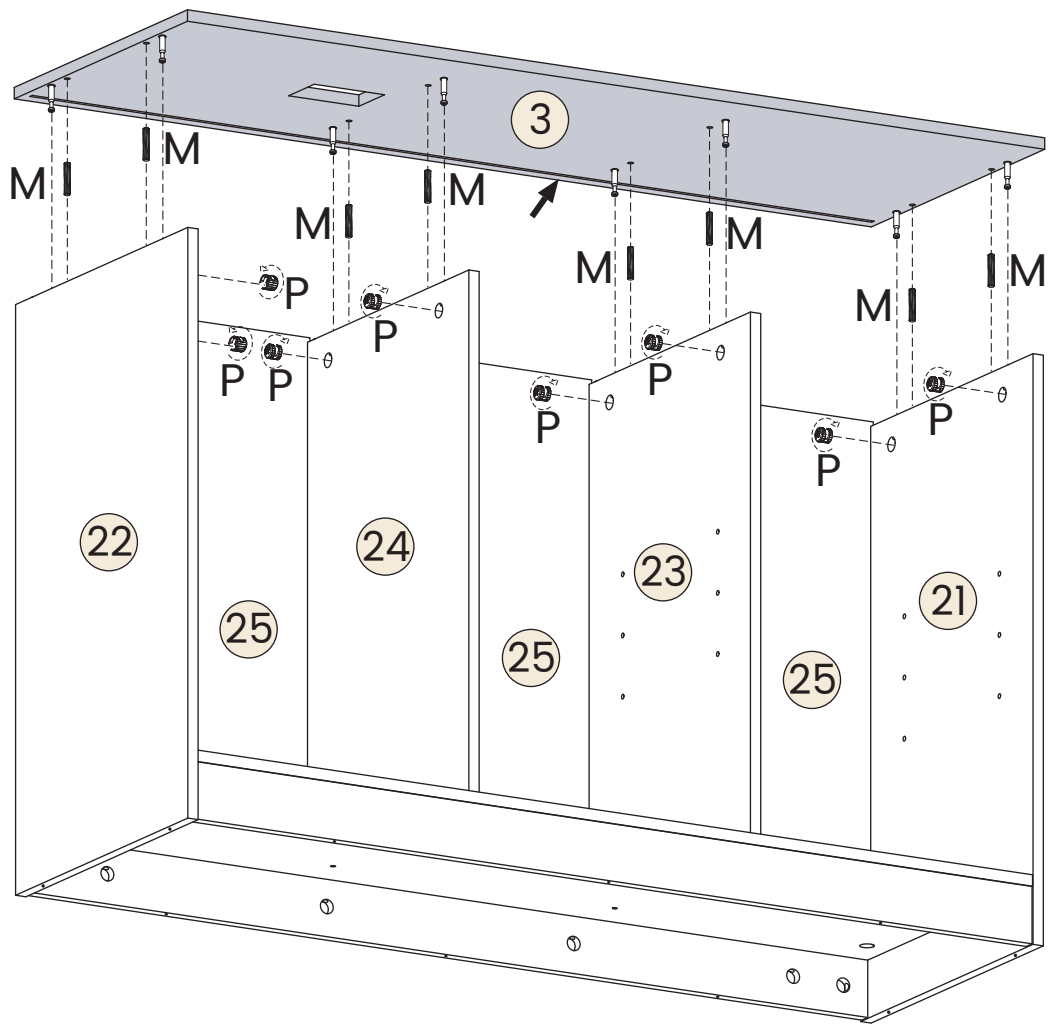

M x8

Ø6x30MM

P x8

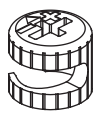

17

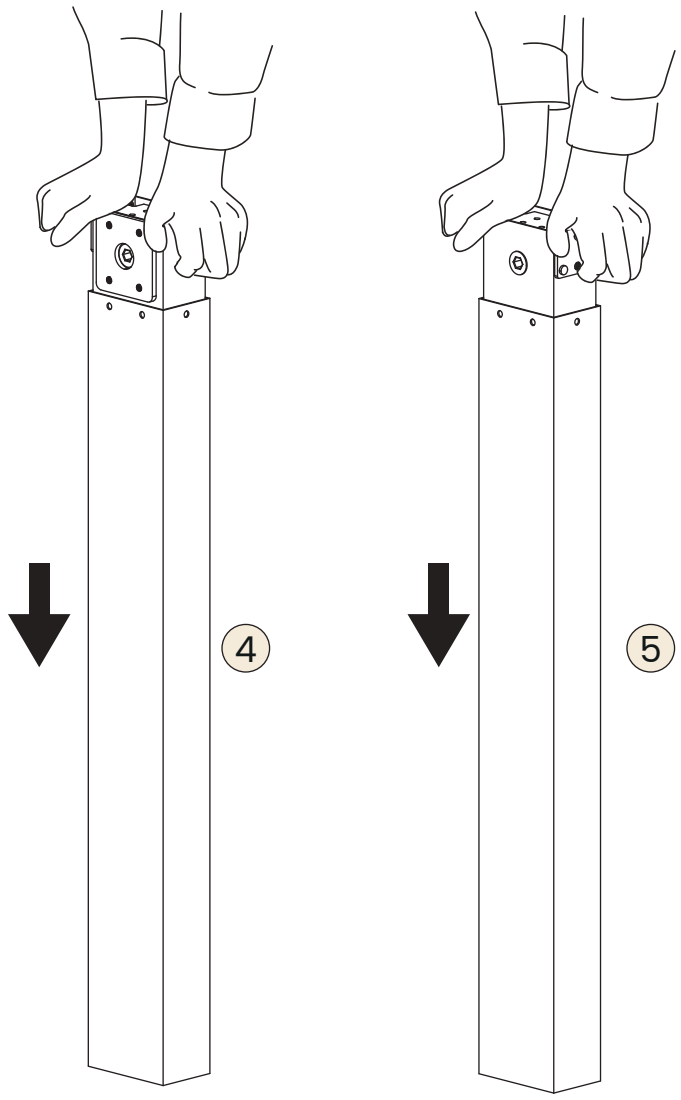

check whether the heights ofthe two table legs are the same.If there is a significant error, press down on them to ensurethat the heights of the two legsare consistent.

18

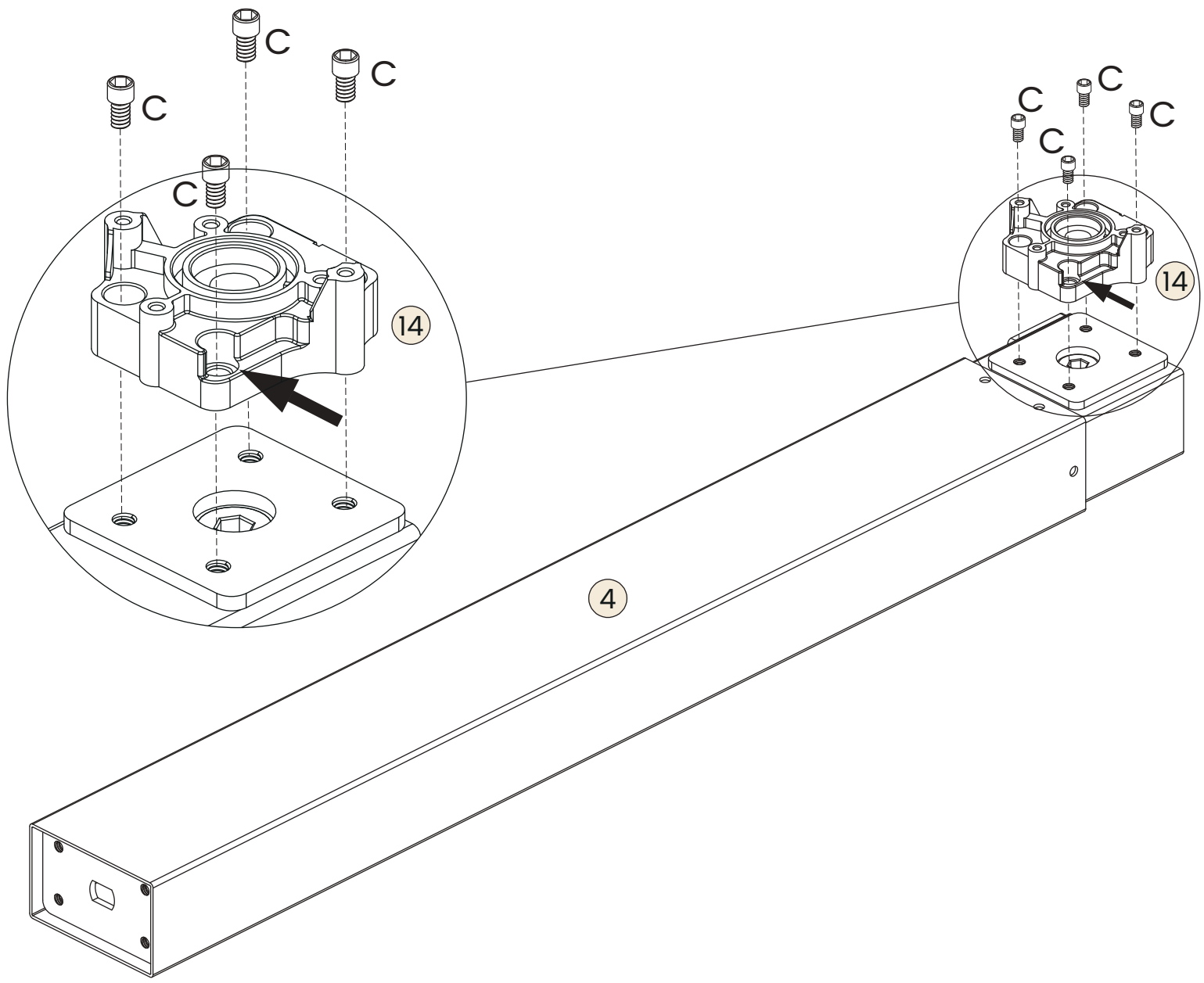

Cx4

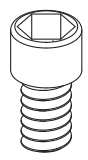

M6X10MM

19

Pay attention to the direction of the telescopic feet

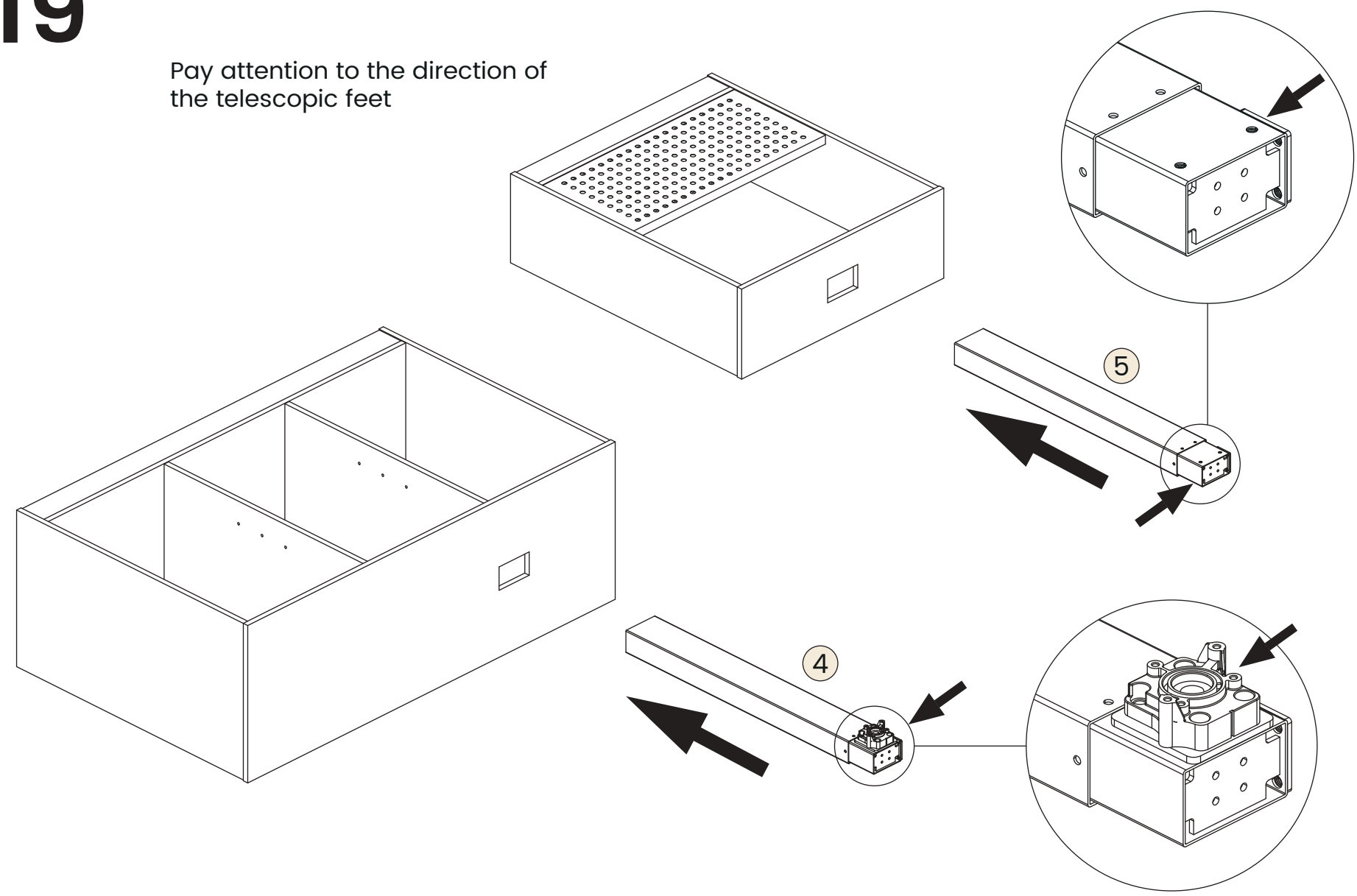

20

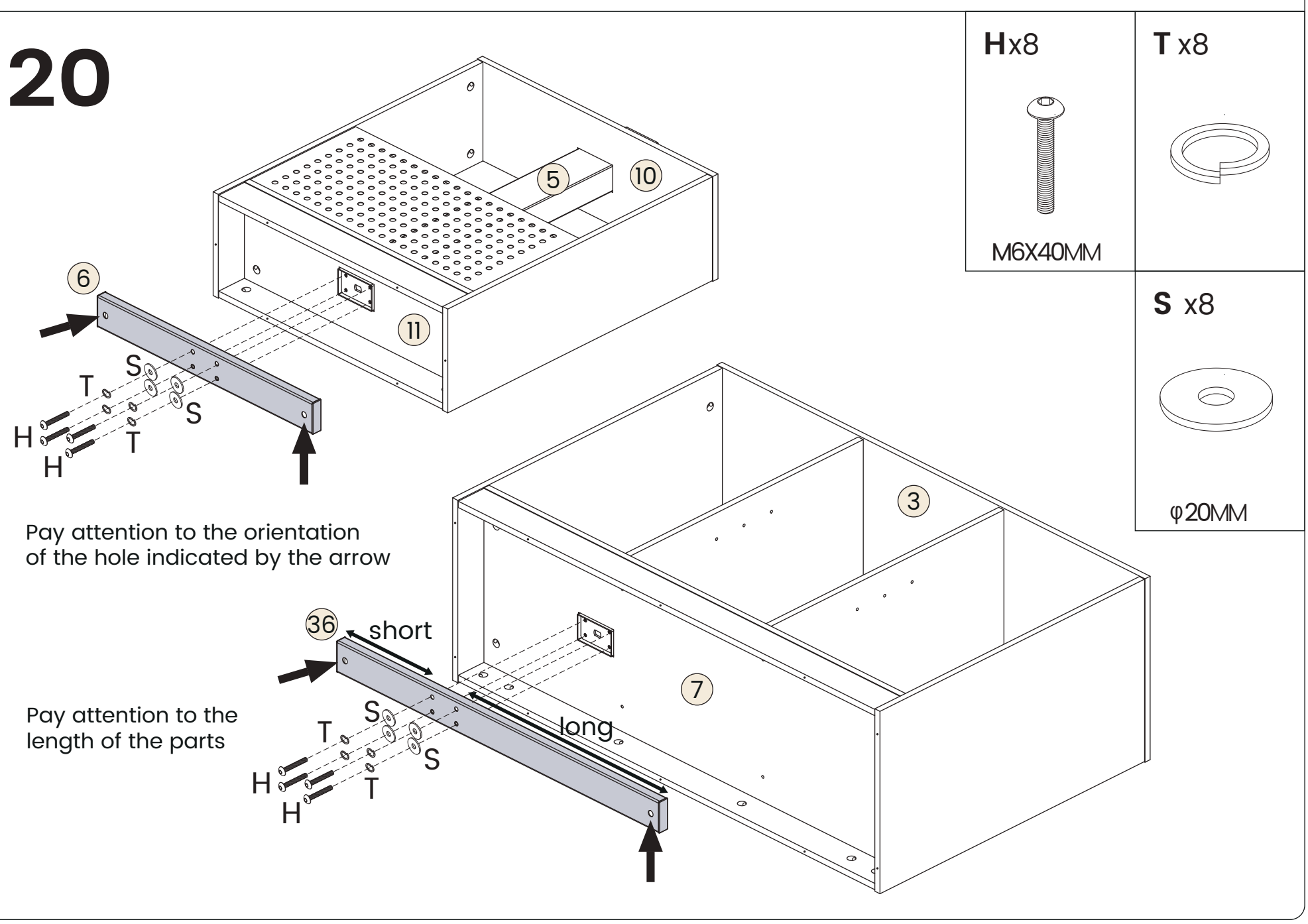

21

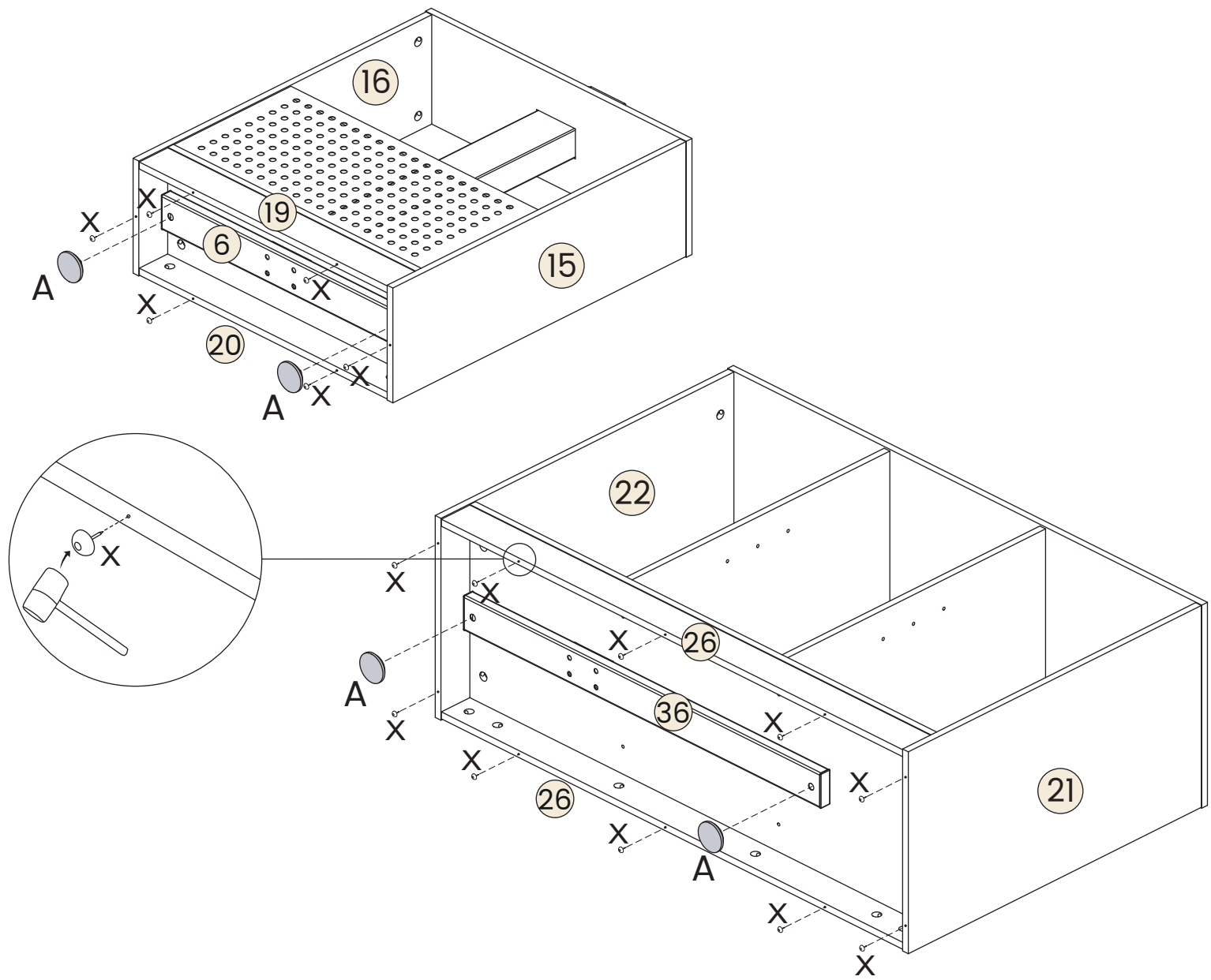

A x4

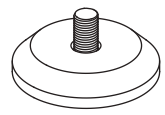

X x16

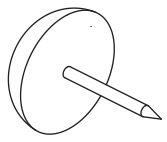

22

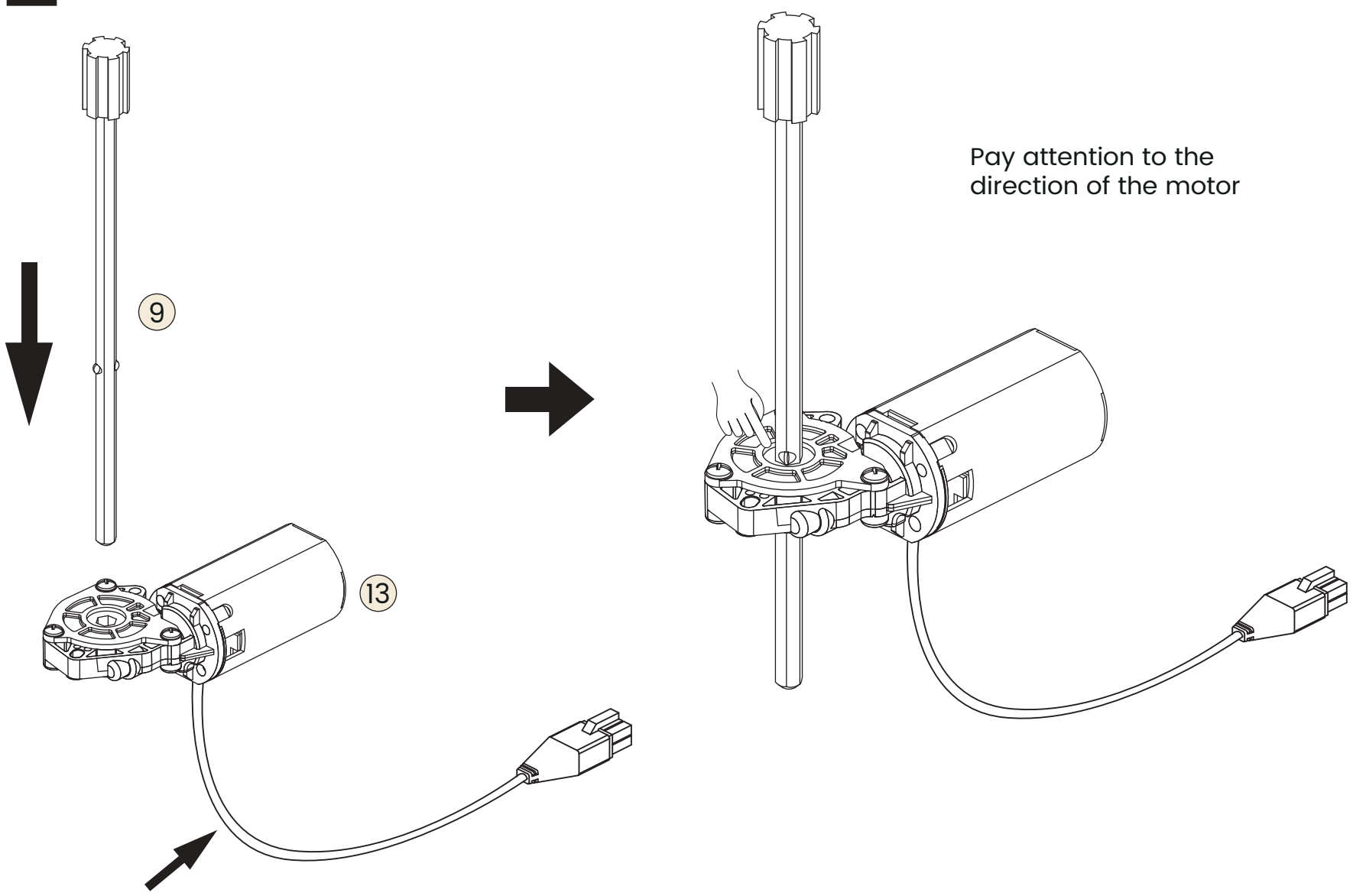

Pay attention to the direction of the motor

23

I x2

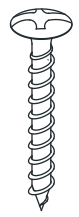

ST4X25MM

1

When holding the No.9 accessory, ensure it is aligned with the hexagonal hole on the leg to facilitate insertion. If the No.9 accessory is tilted, it may be difficult to insert

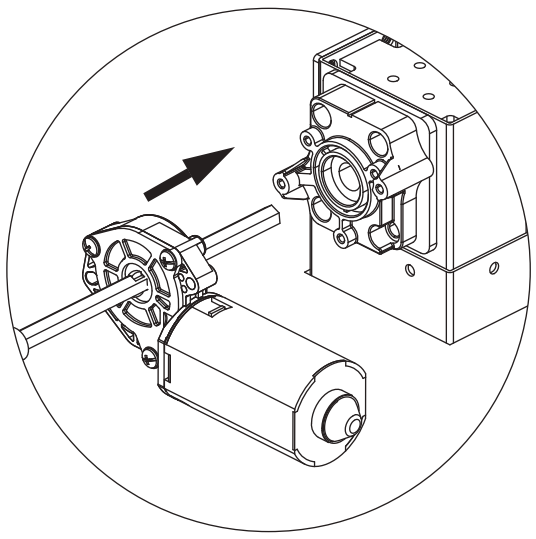

Firstly, determine the direction of the motor

2

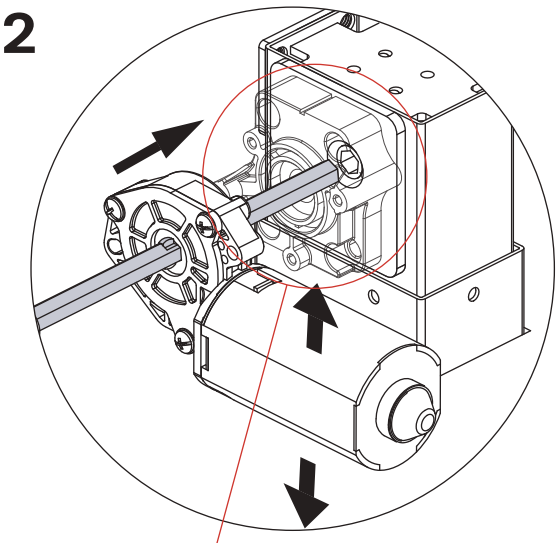

Secondly, rotate the motor slightly until the hexagonal rod can be inserted

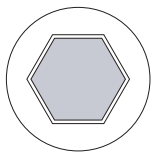

√

Hexagonal rod aligns with hexagonal opening

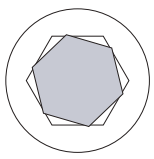

X

The hexagonal rod is not aligned with the hexagonal opening, resulting in subsequent inability to lift or lower

3

The point indicated by the arrow is aligned with the motor

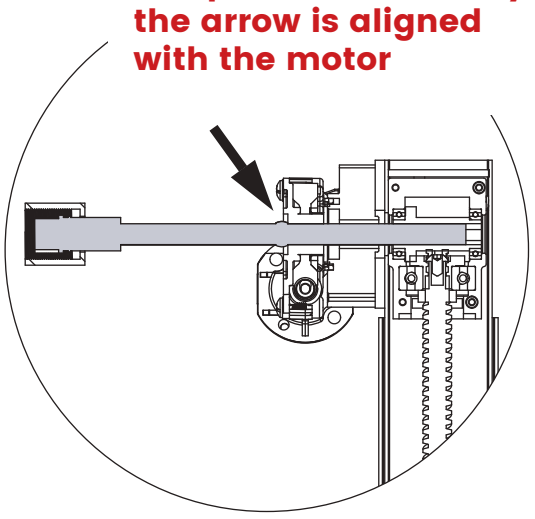

Thirdly, ensure that the hexagonal rod is fully inserted into the lifting device of accessory 4

4

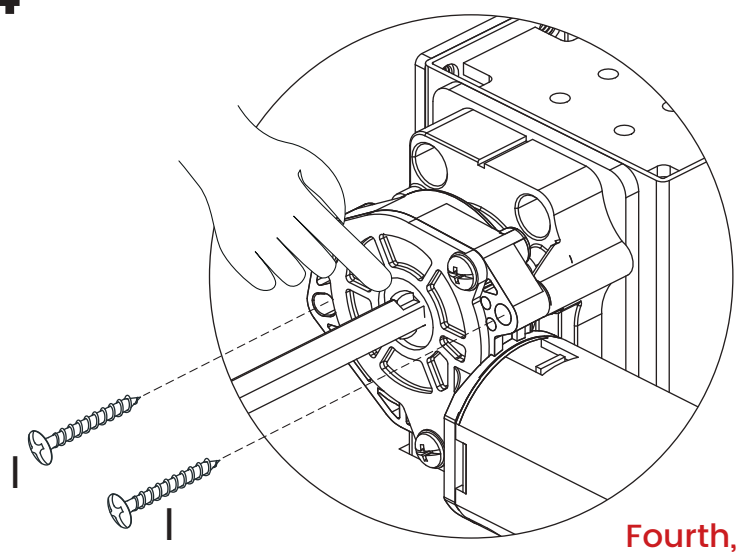

Fourth, tighten screw I to secure the motor

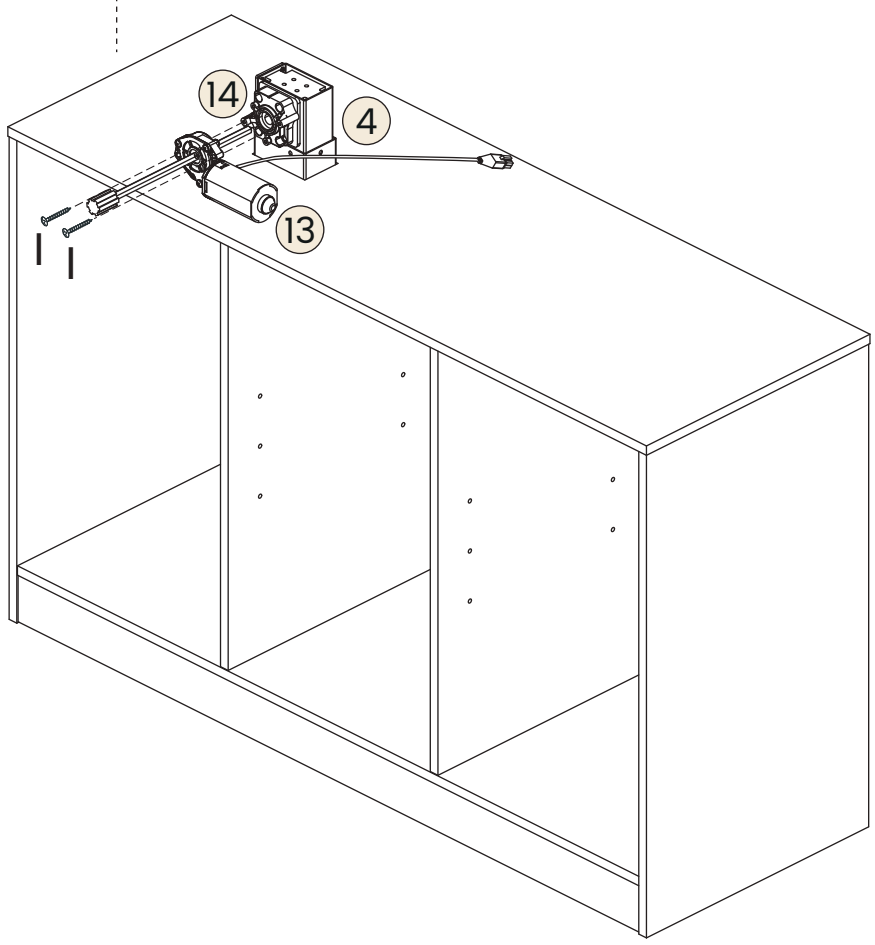

Pay attention to the direction of the motor

Assembly Instruction

24

Cx6

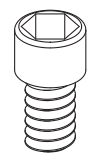

M6X10MM

Pay attention to the direction of the arrow pointing

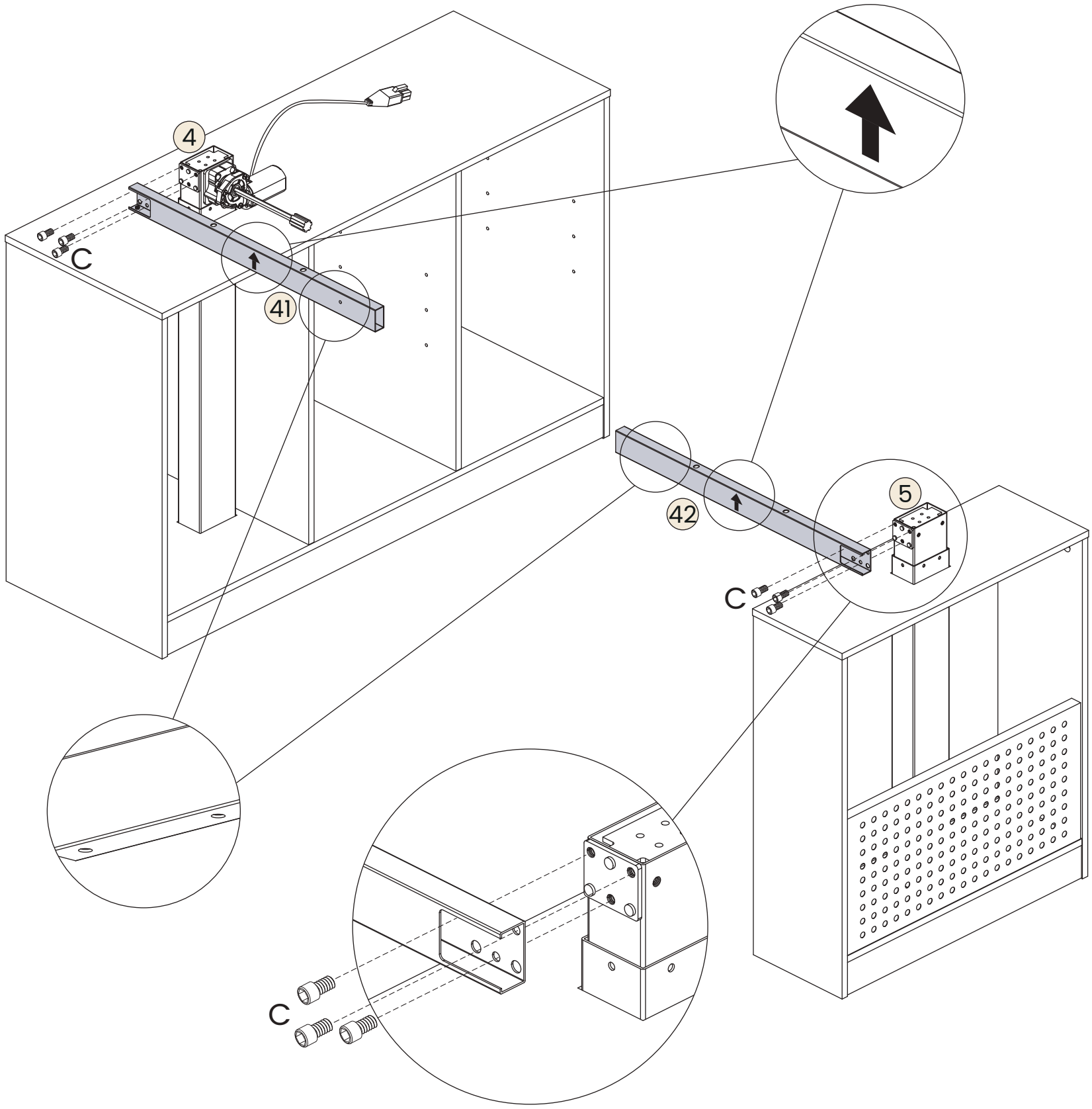

25

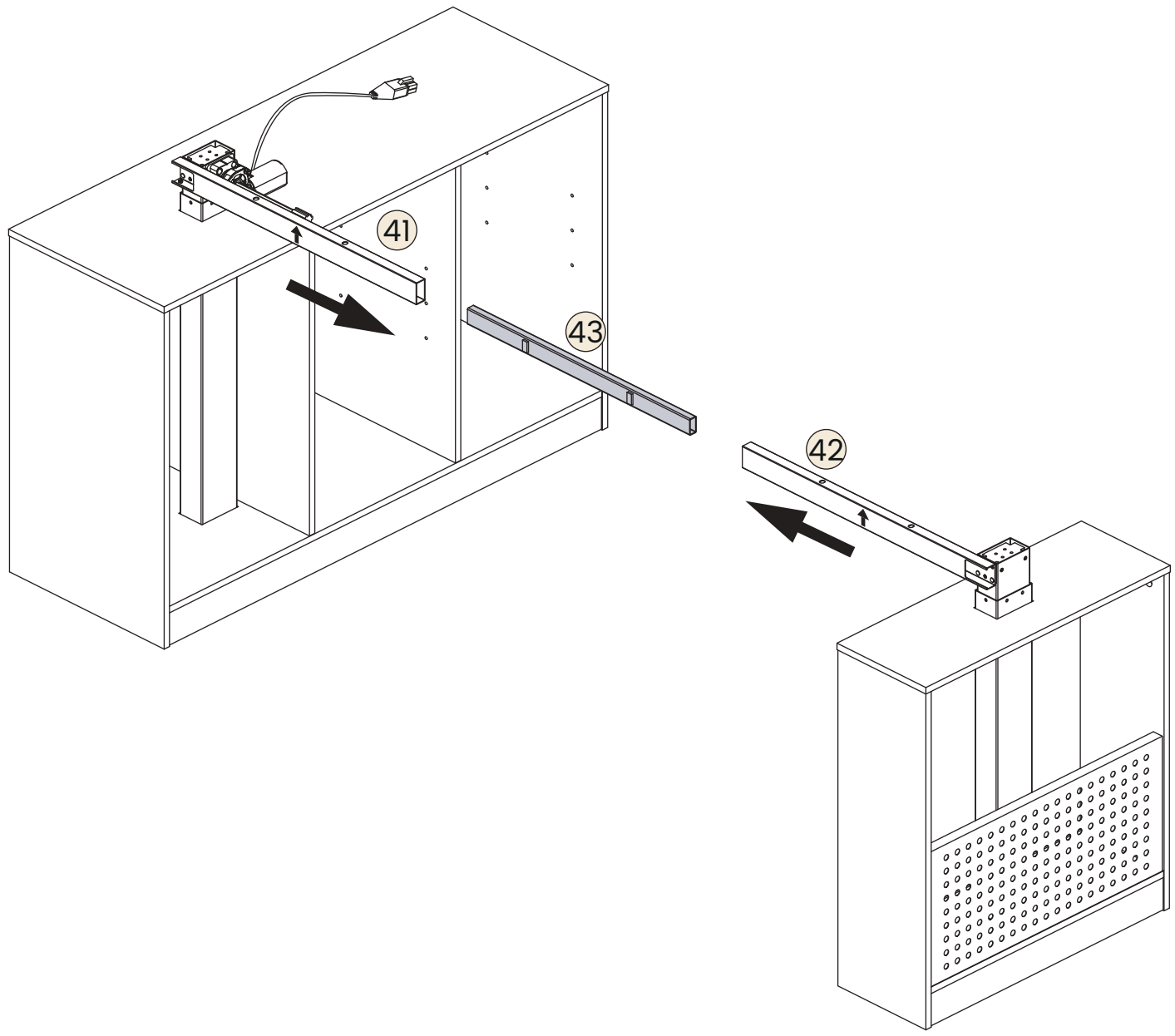

26

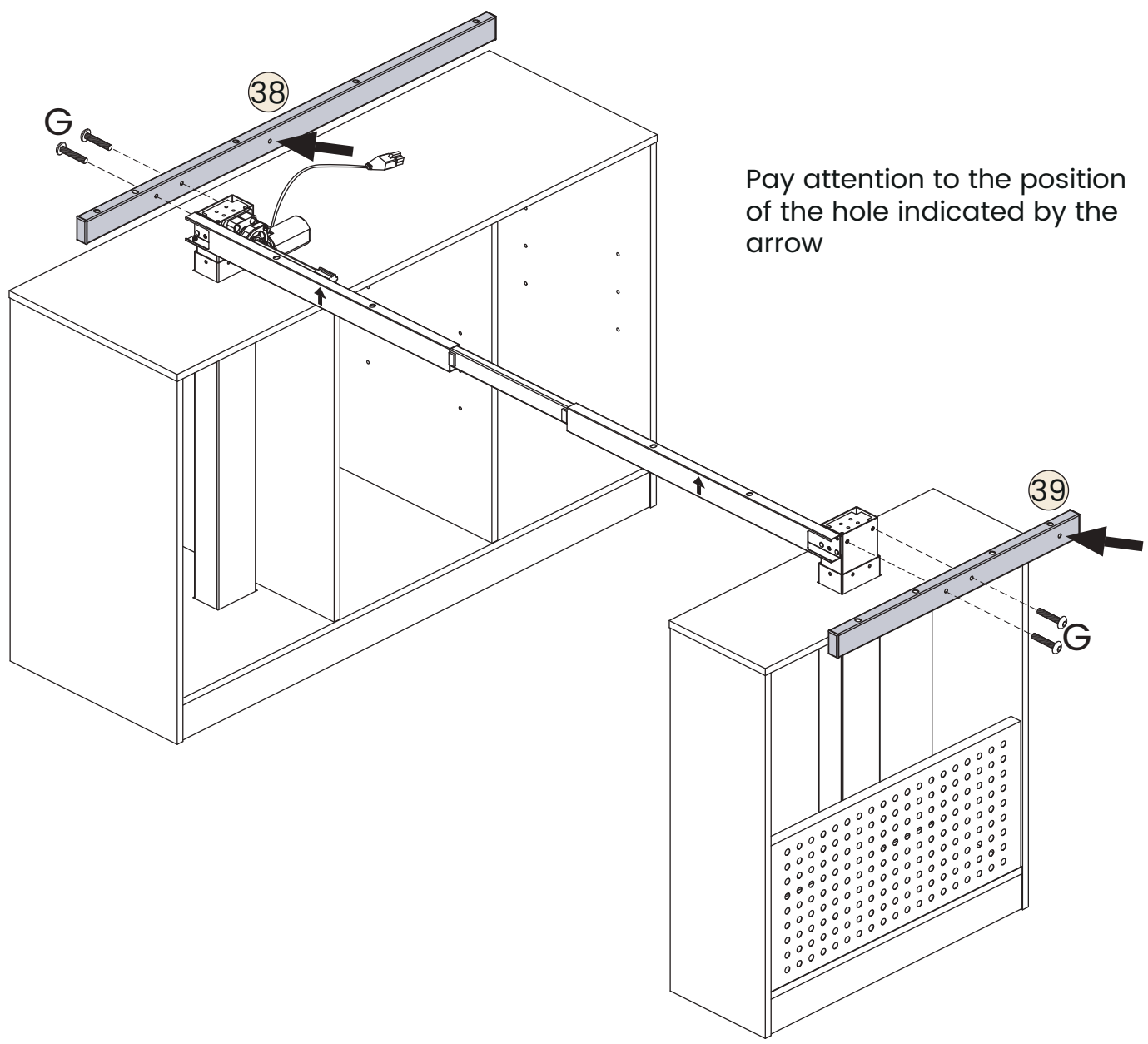

Pay attention to the position of the hole indicated by the arrow

G x4

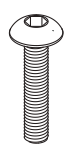

M6X28MM

27

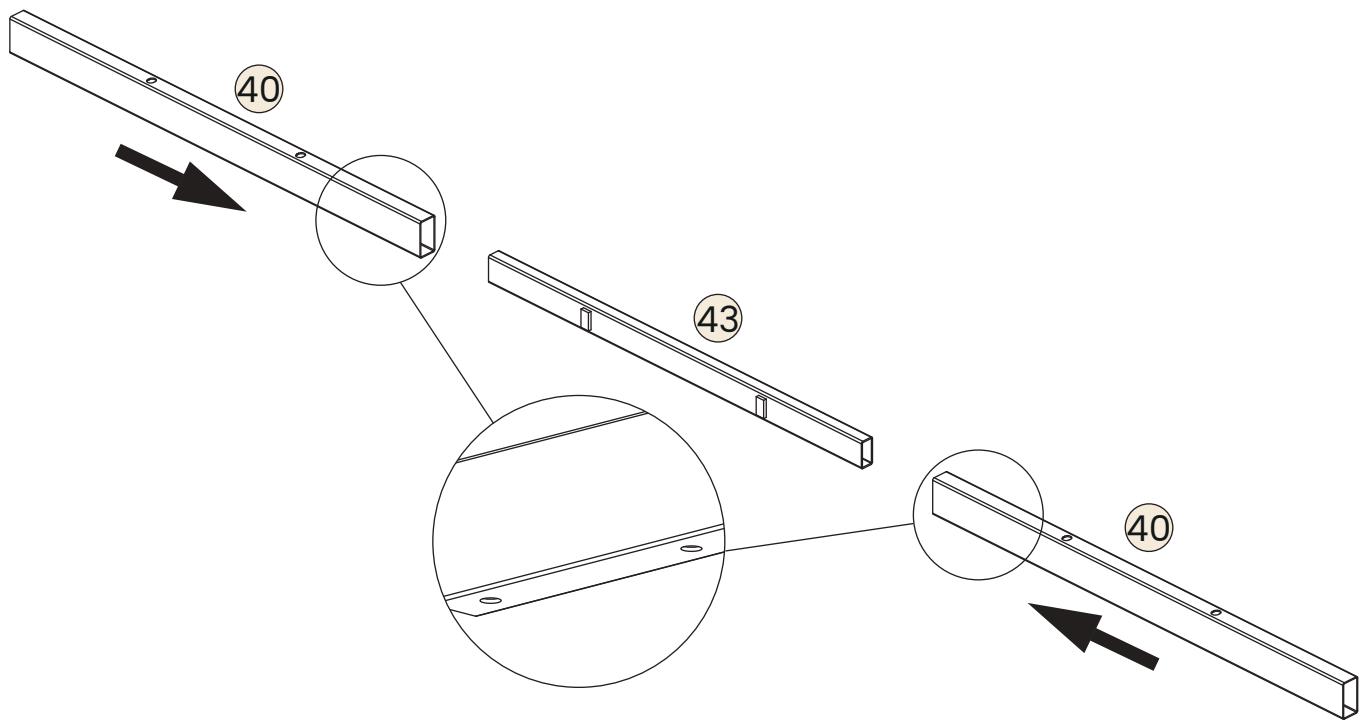

28

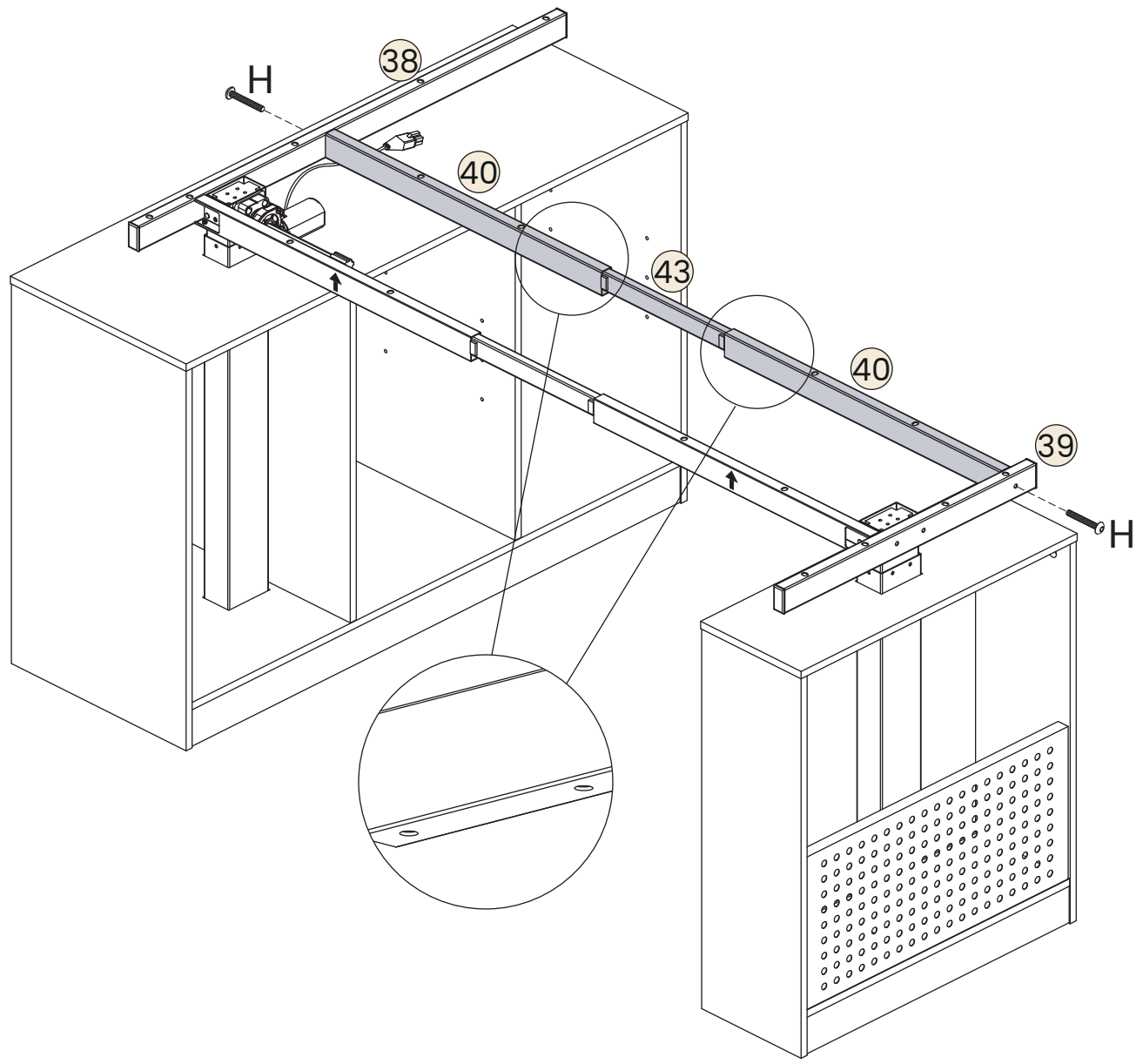

Hx2

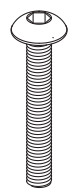

M6X40MM

29

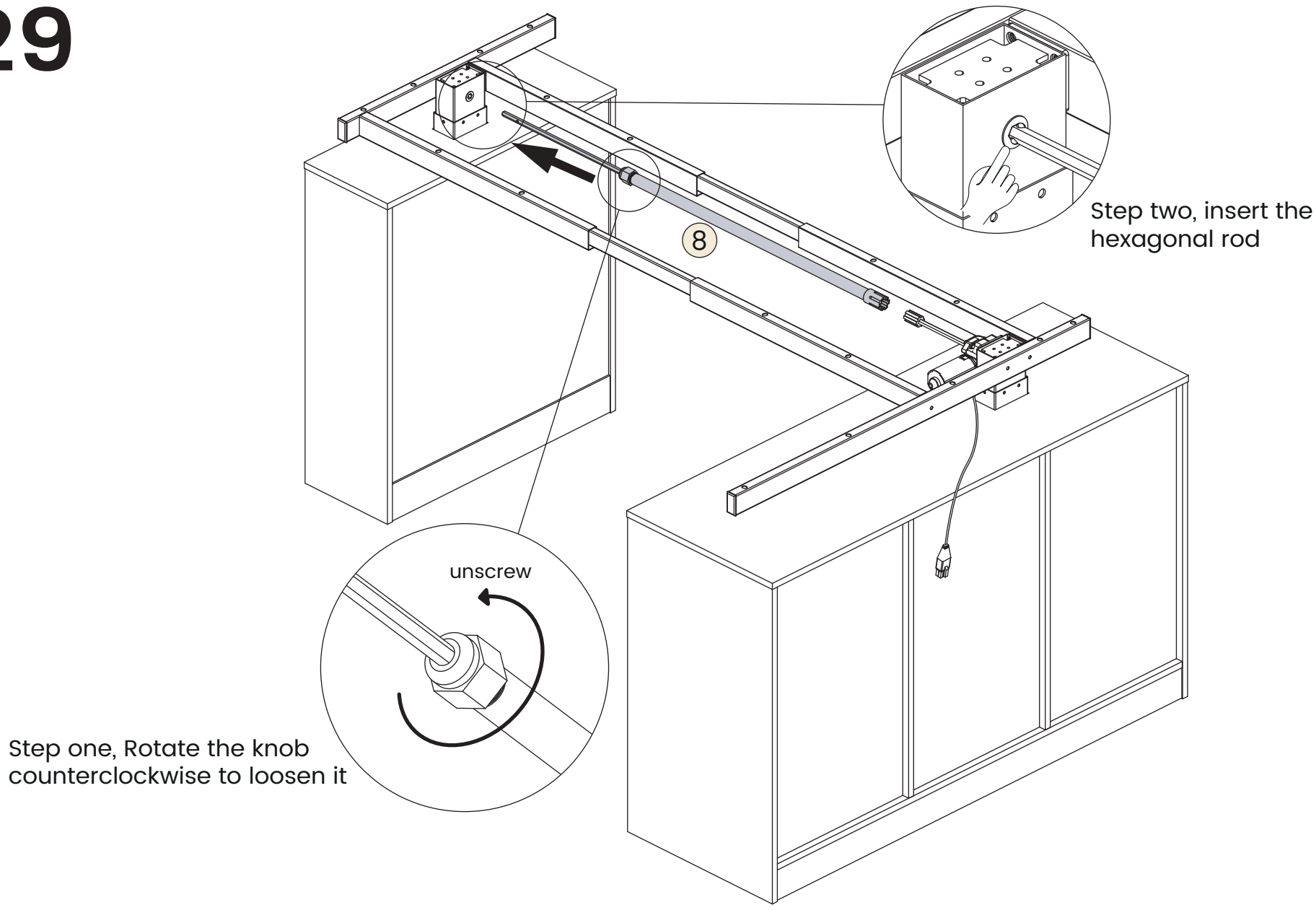
8
Step two, insert the hexagonal rod
unscrew
Step one, Rotate the knob counterclockwise to loosen it

30

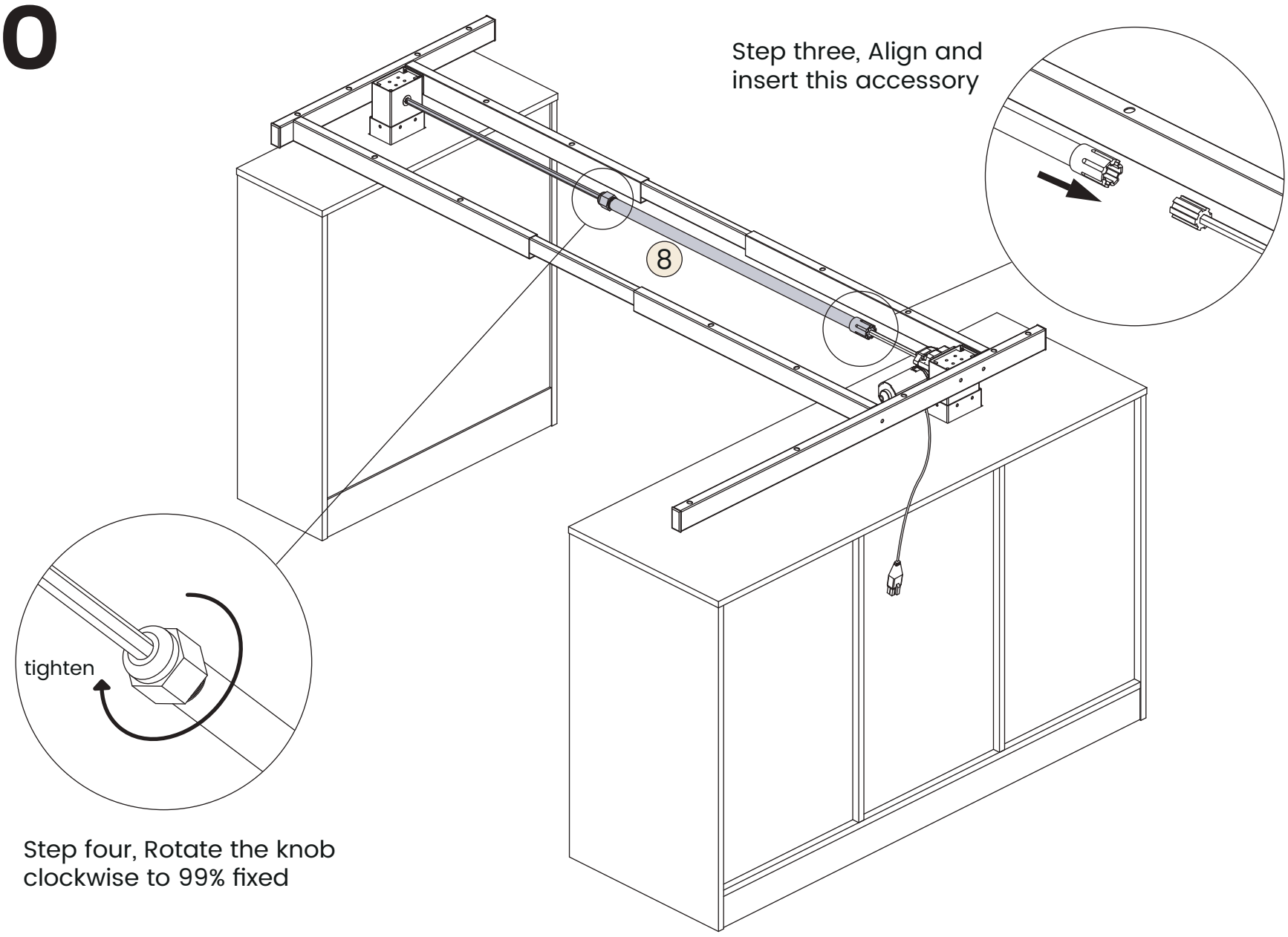
Step three, Align and insert this accessory
8
tighten
Step four, Rotate the knob clockwise to 99% fixed

31

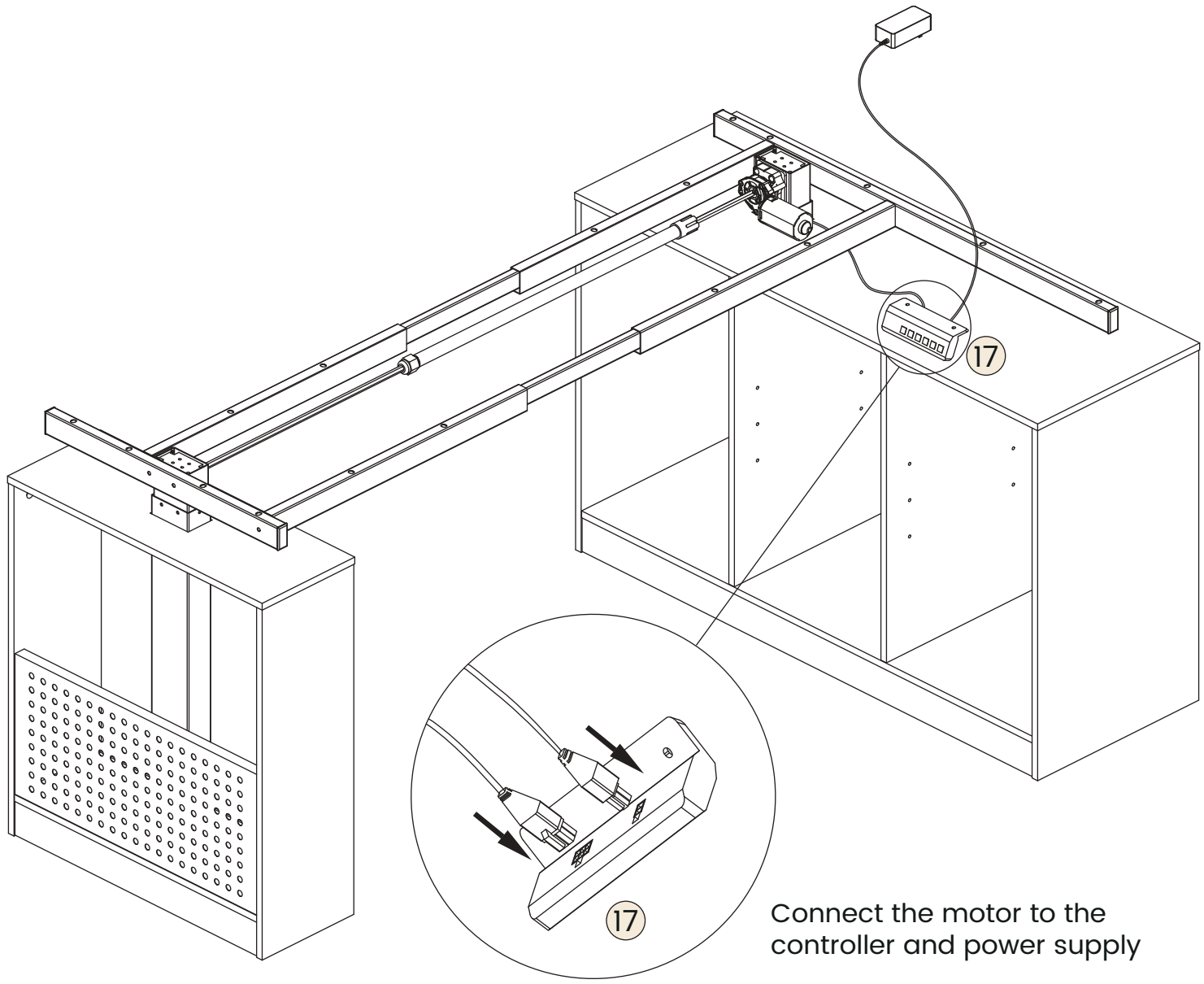

Connect the motor to the controller and power supply

32

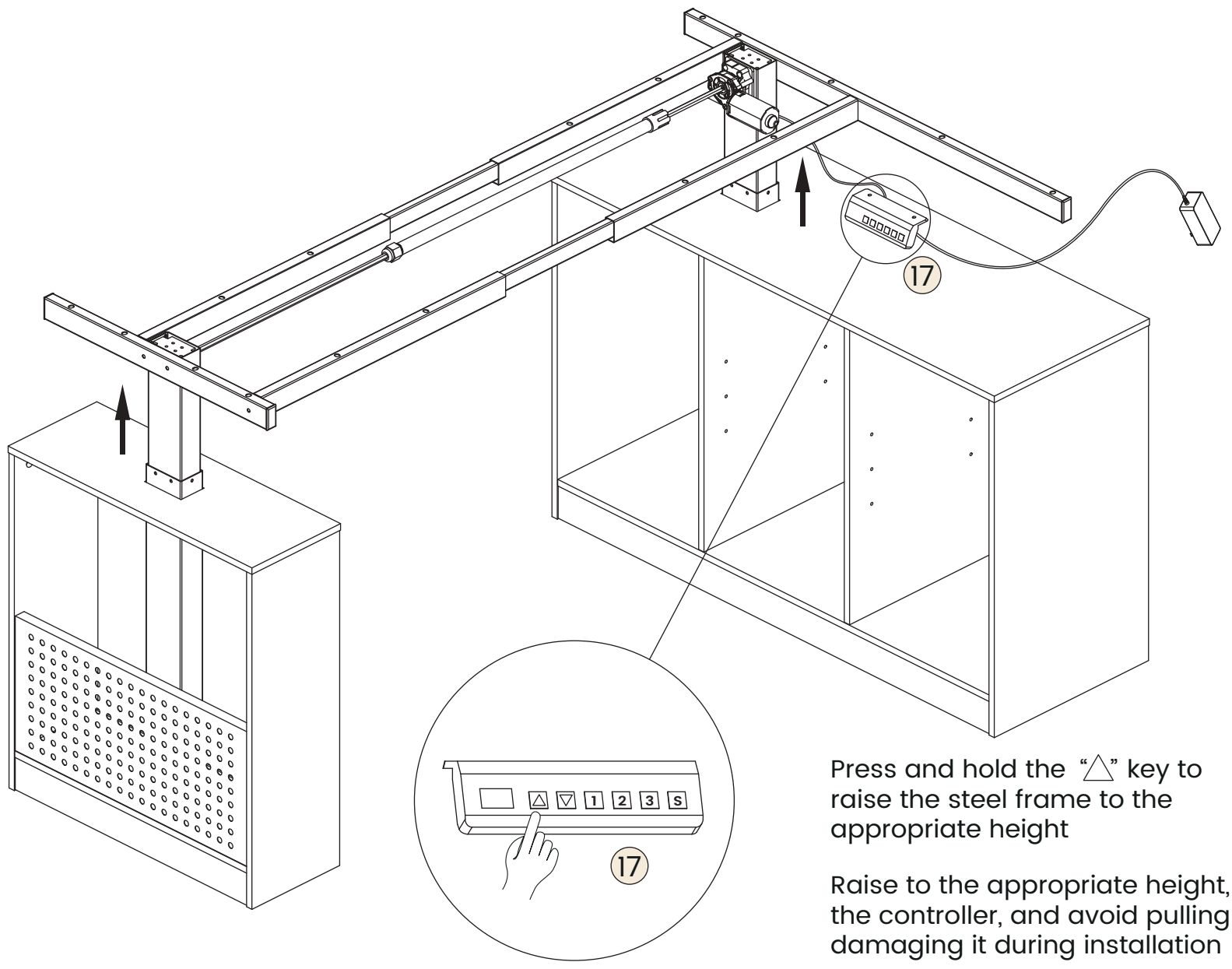

Press and hold the "△" key to raise the steel frame to the appropriate height

Raise to the appropriate height, unplug the controller, and avoid pulling or damaging it during installation

33

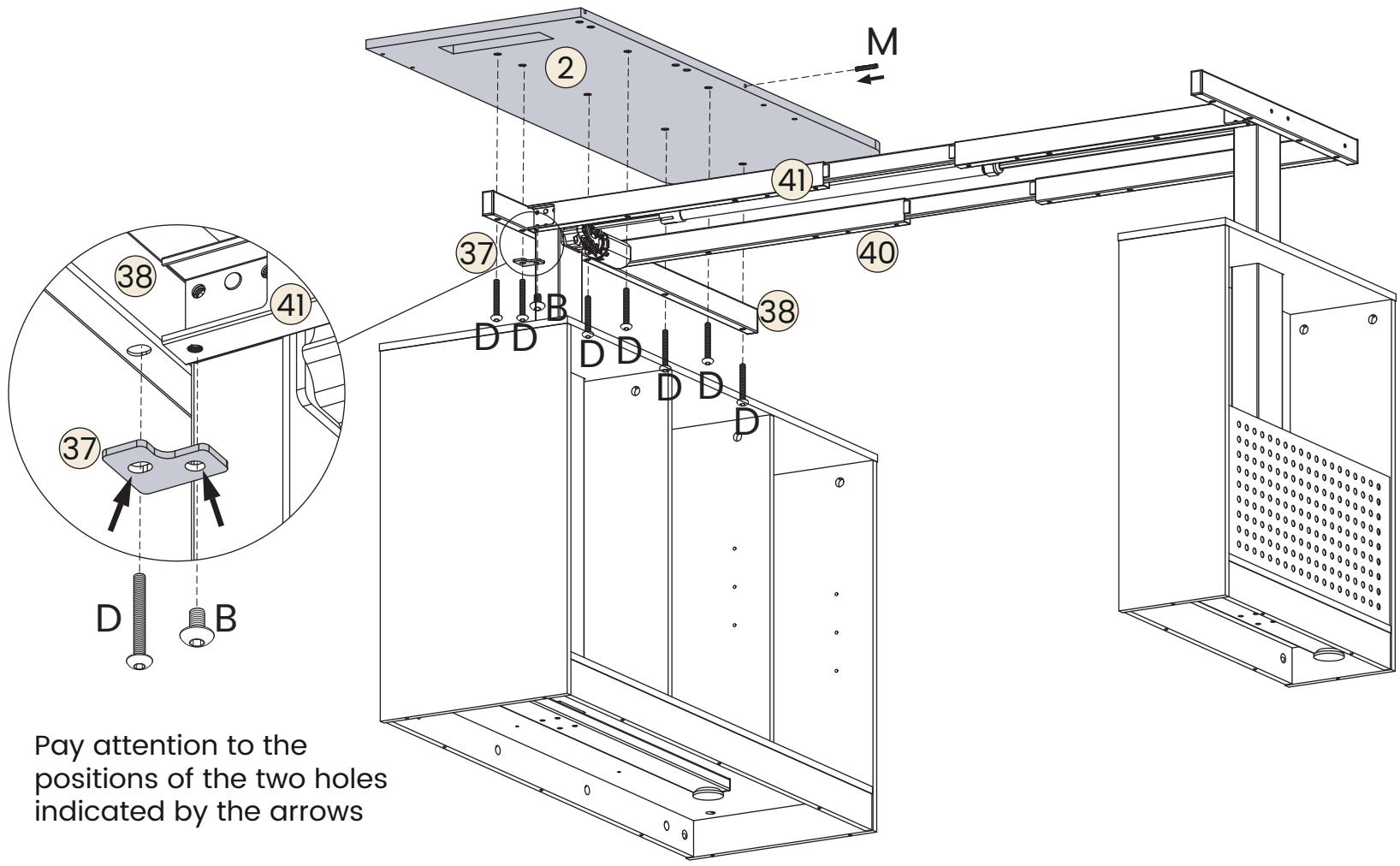

Pay attention to the positions of the two holes indicated by the arrows

B x1

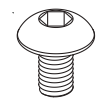

M6X10MM

D x7

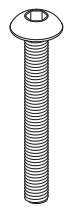

M6X48MM

M x1

Ø6x30MM

34

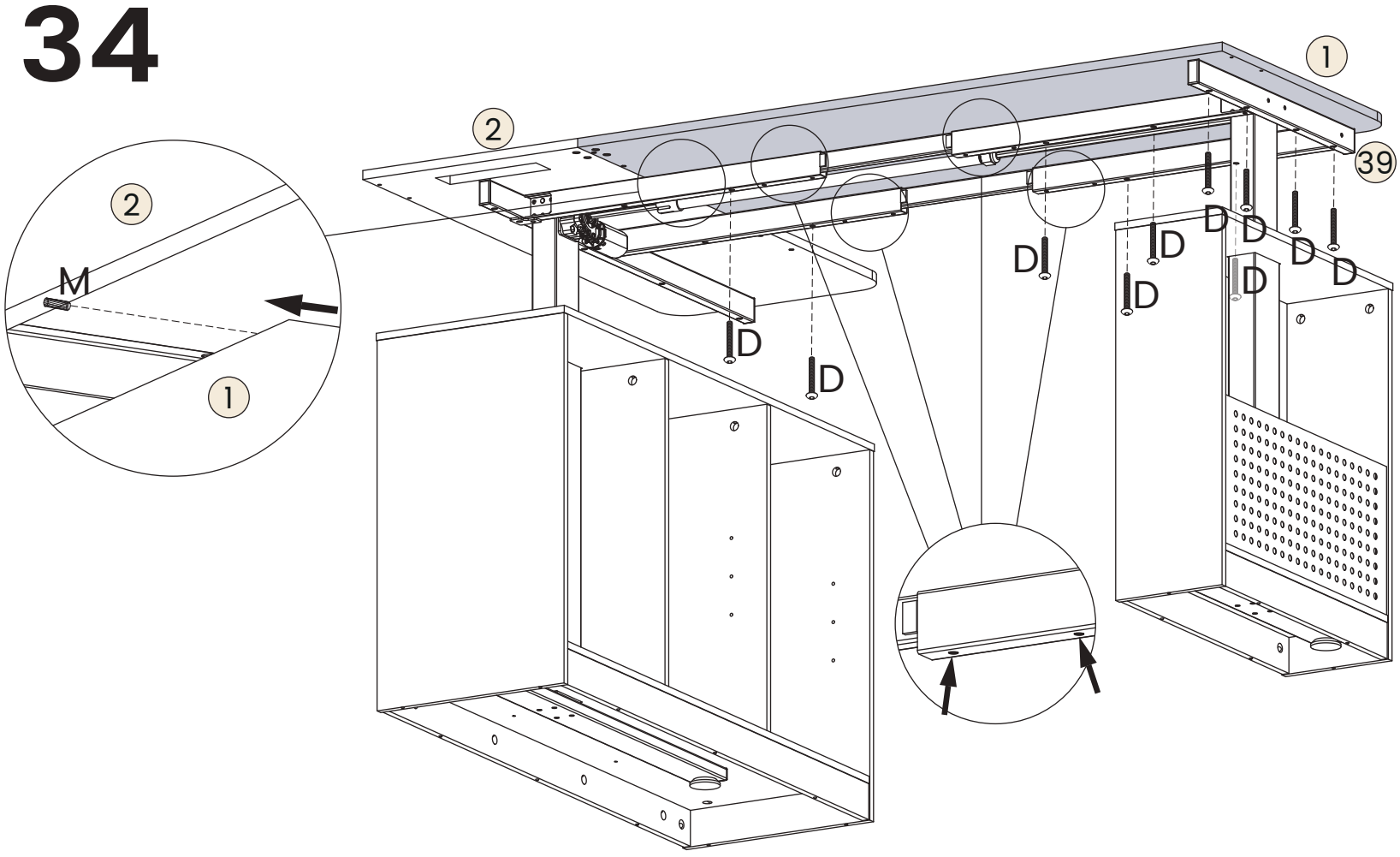

D x10

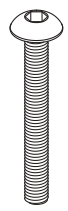

M6X48MM

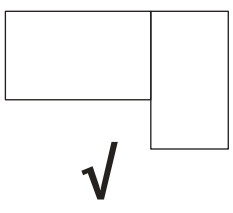

Install correctly

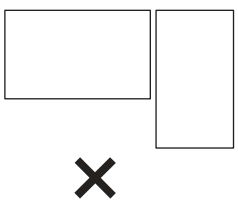

Installation with gaps

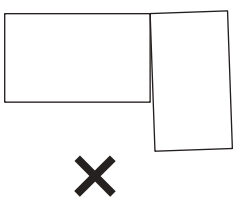

Installation skewed

35

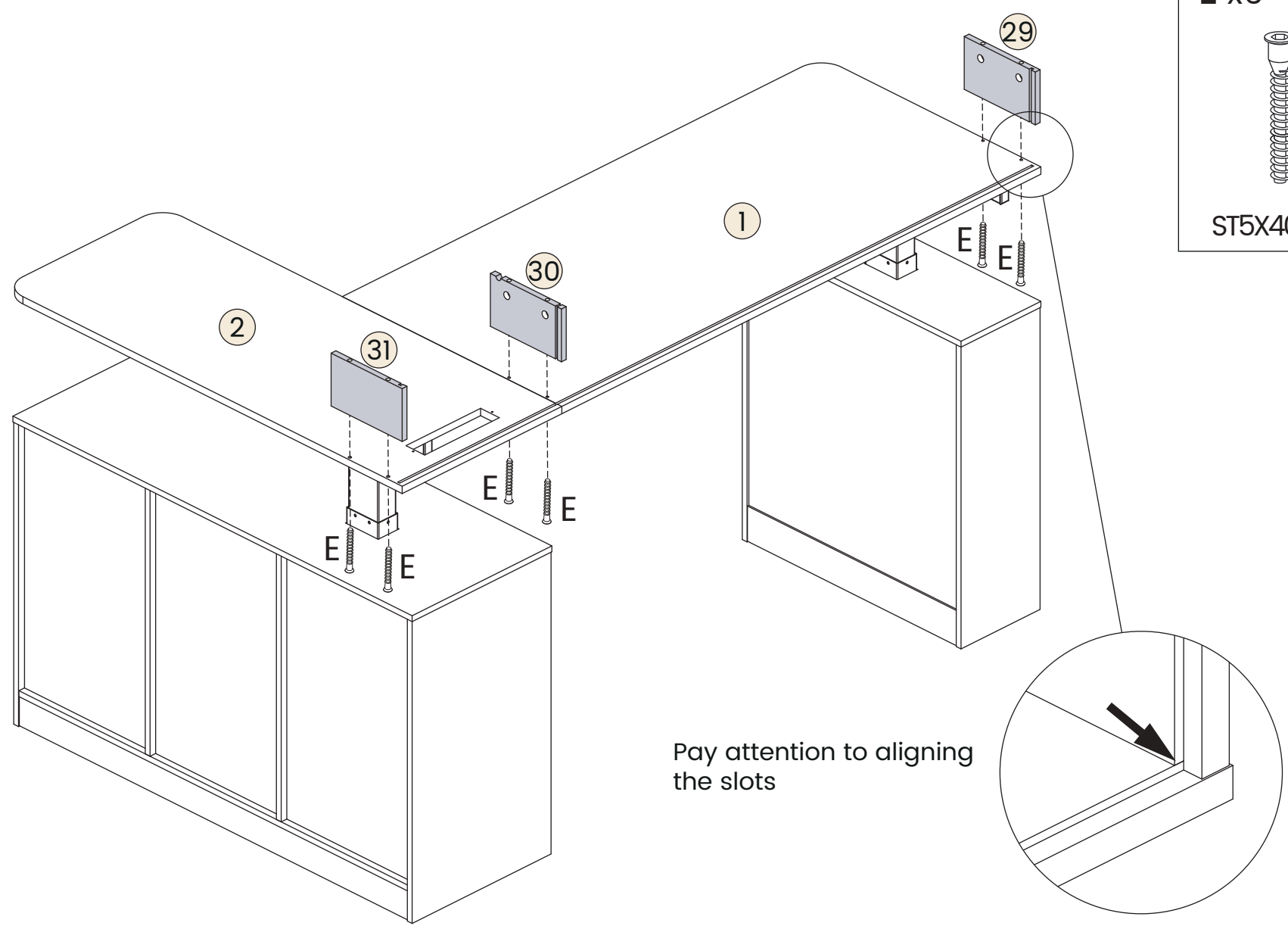
E x6
ST5X40MM
29
1
30
2
31
E
E
E
E
E
E
Pay attention to aligning
the slots

36

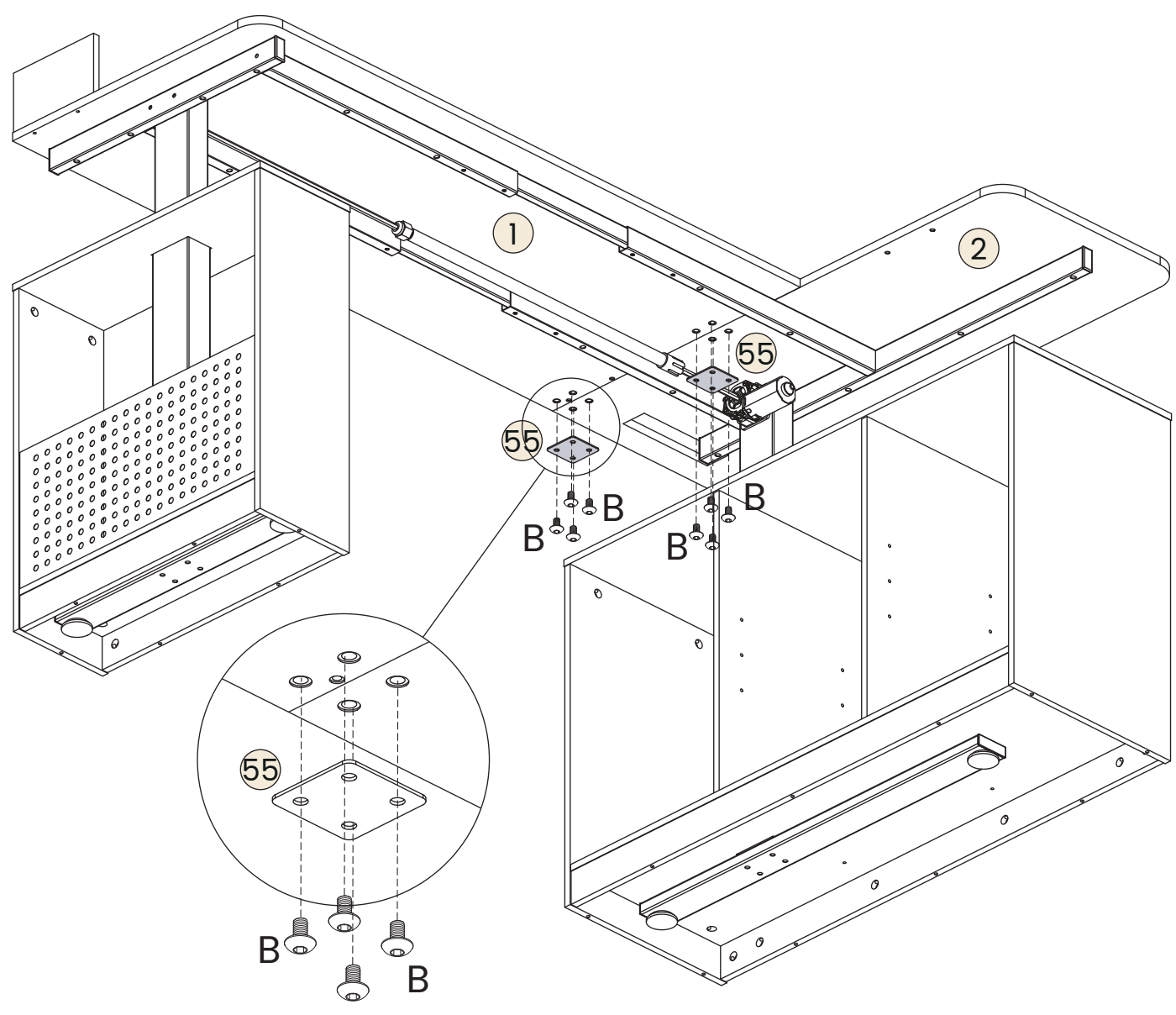
B x8
M6X10MM
1
2
55
55
55
B
B
B
B
B
B
B

37

B x8

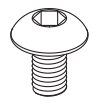

M6X10MM

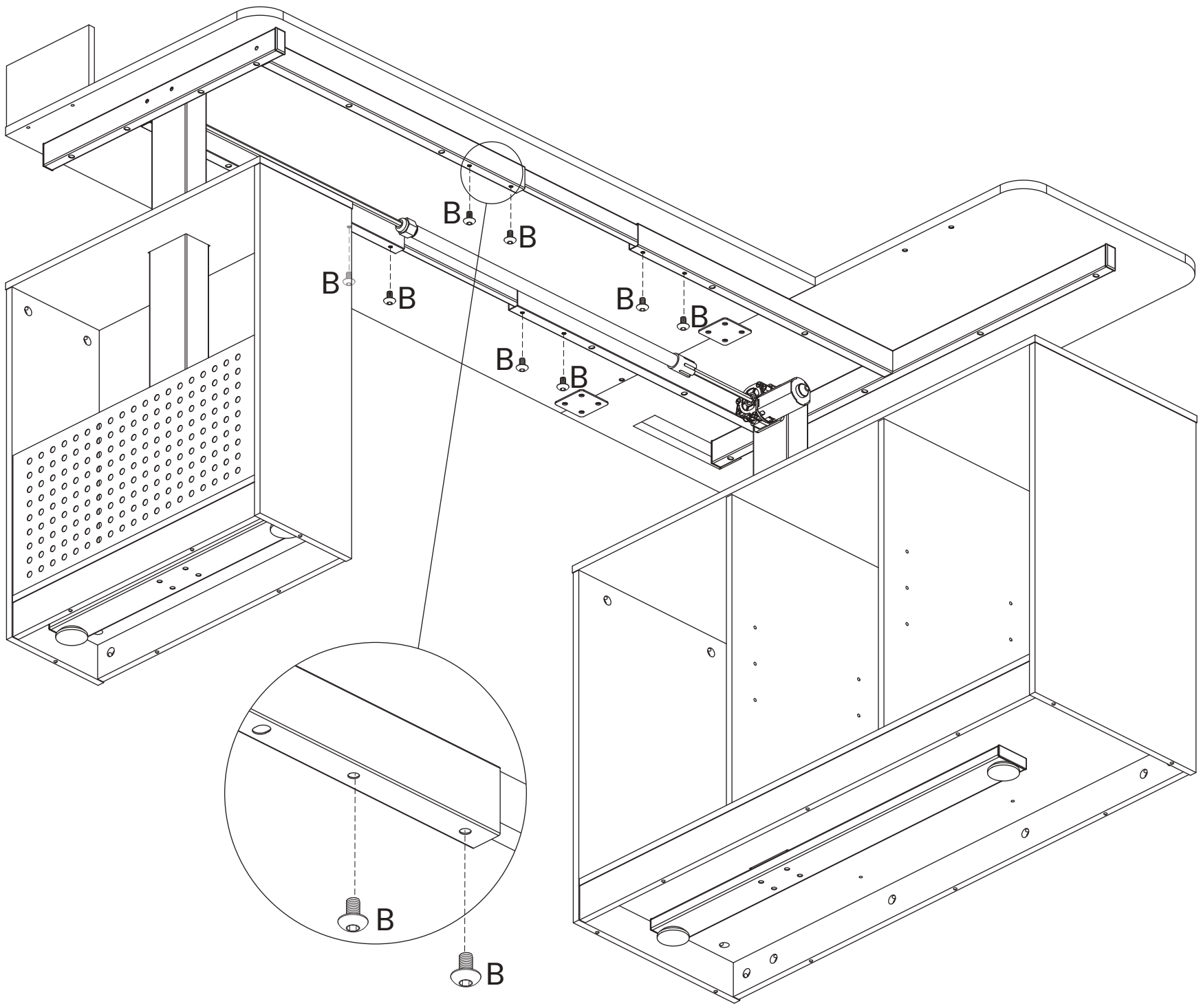

38

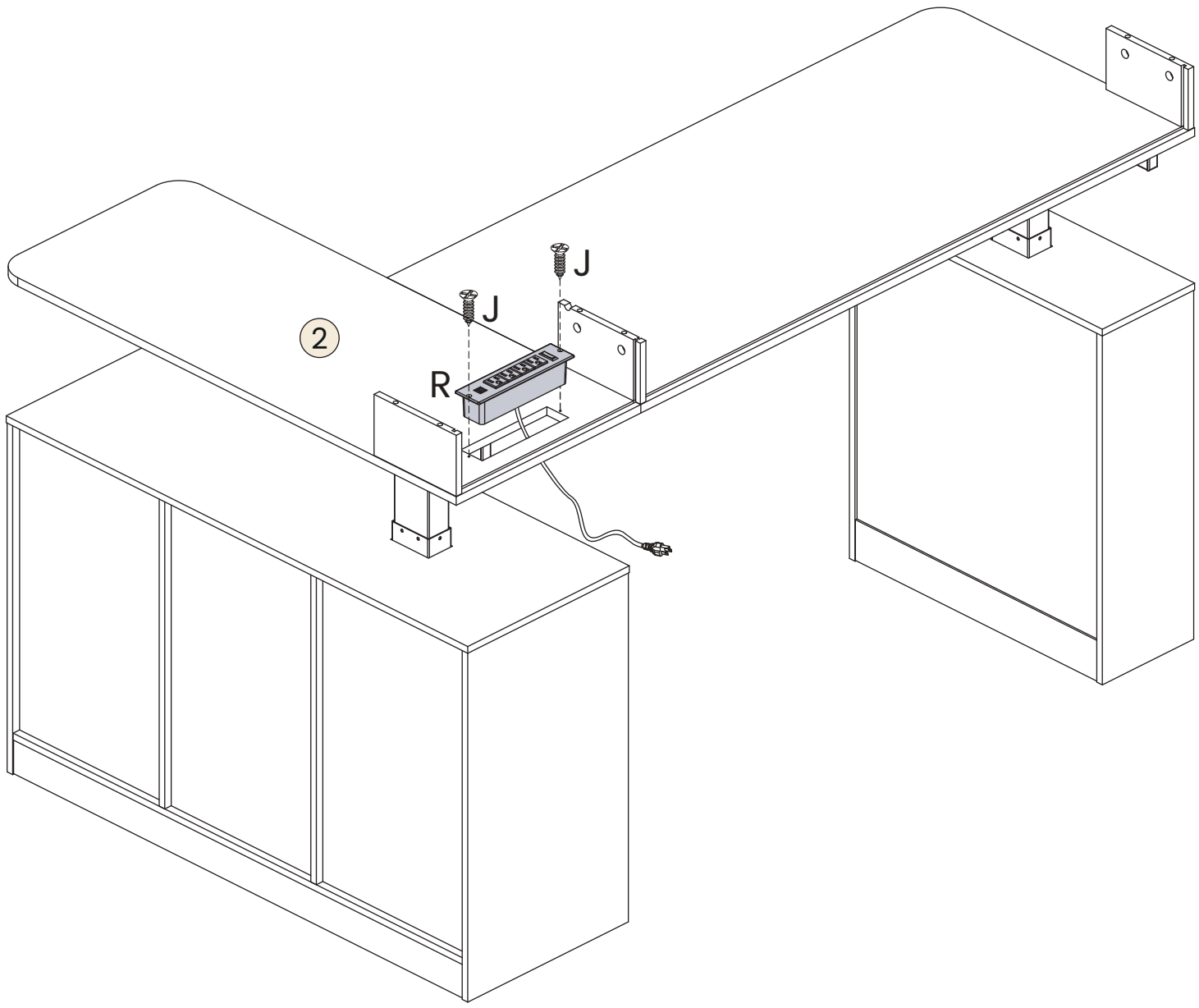

J x2

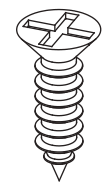

ST4X12MM

R x1

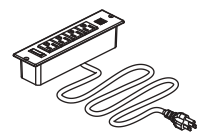

39

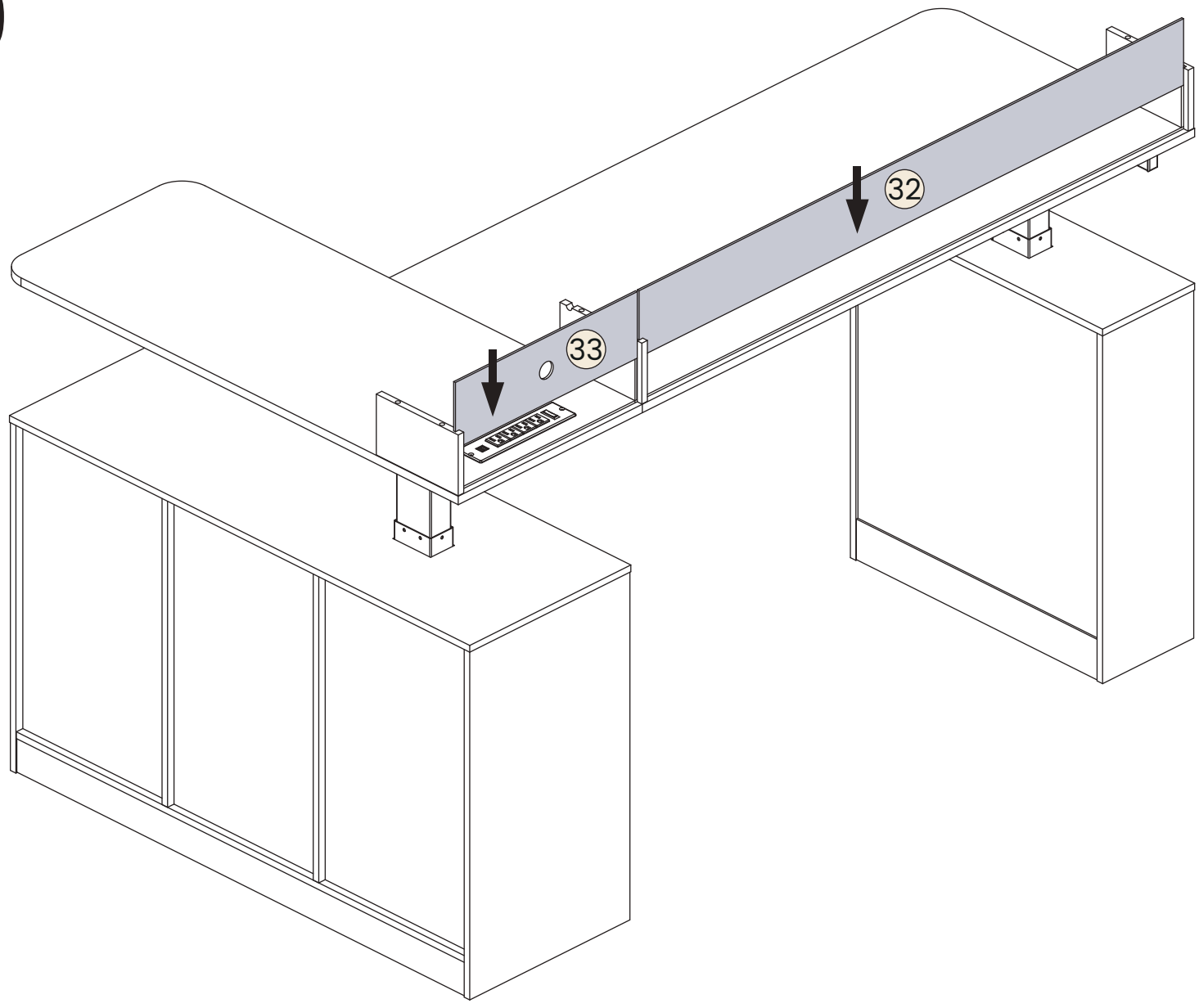

40

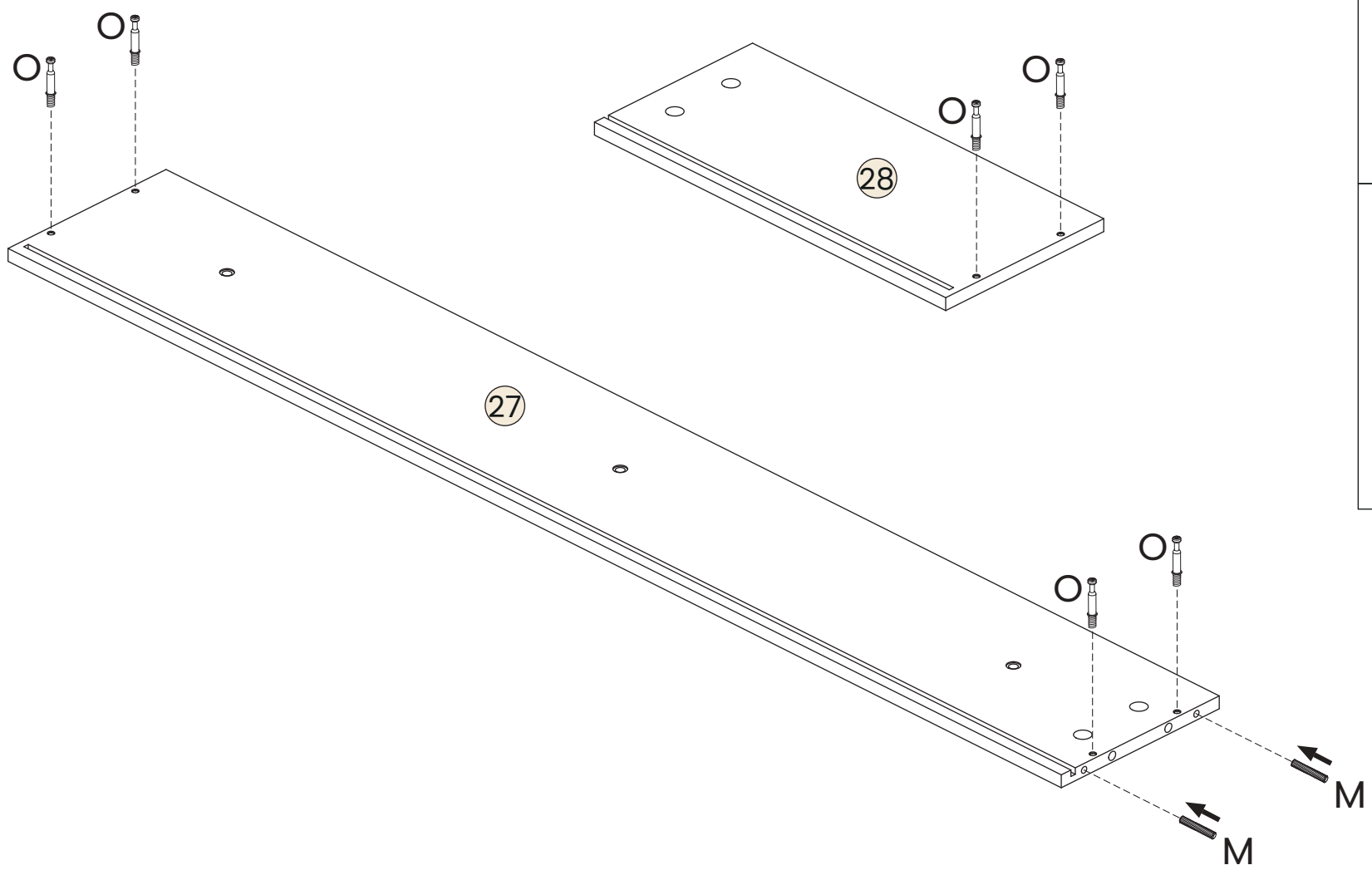

M x2

Ø6x30MM

O x6

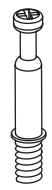

41

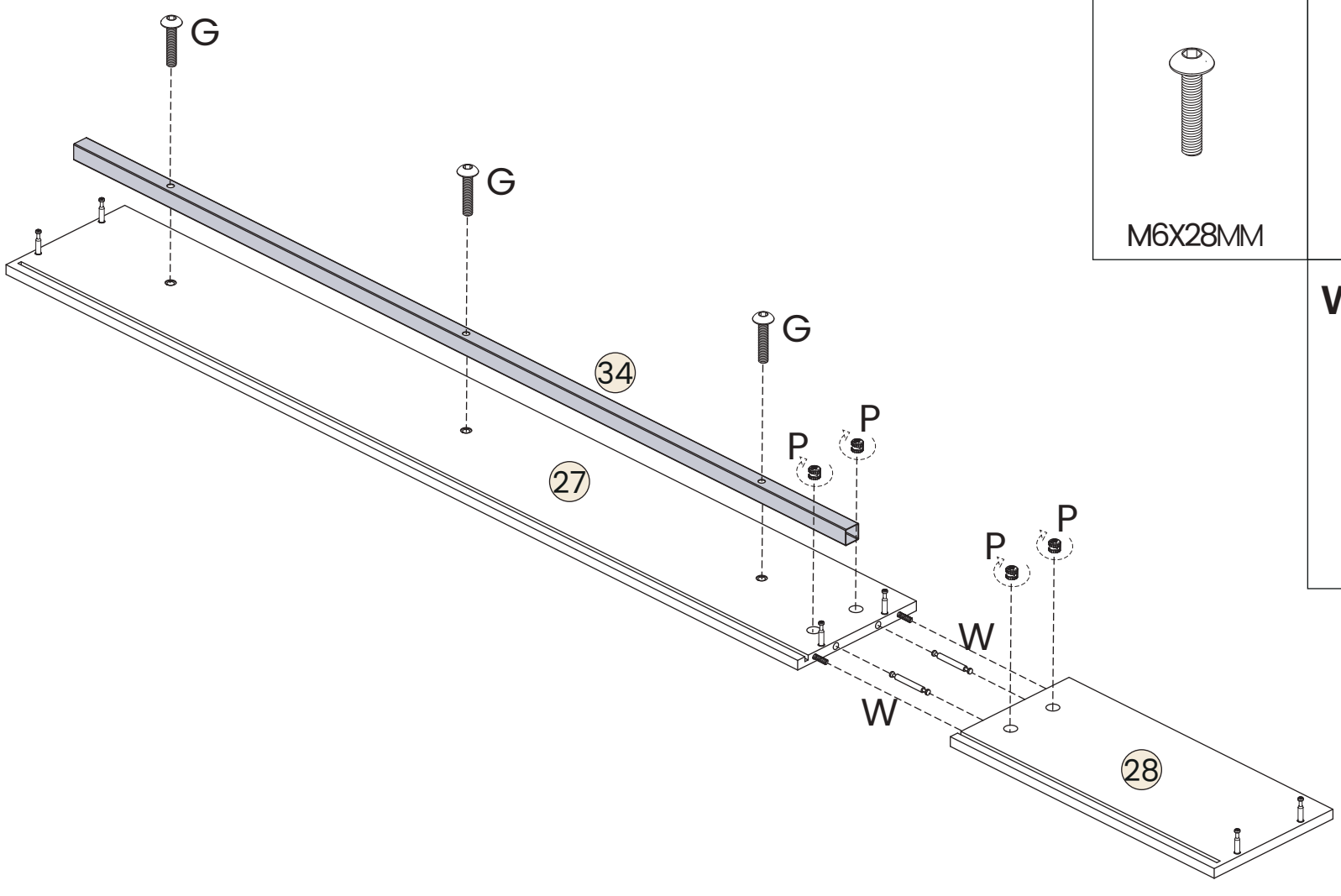

G x3

M6X28MM

P x4

W x2

42

P x6

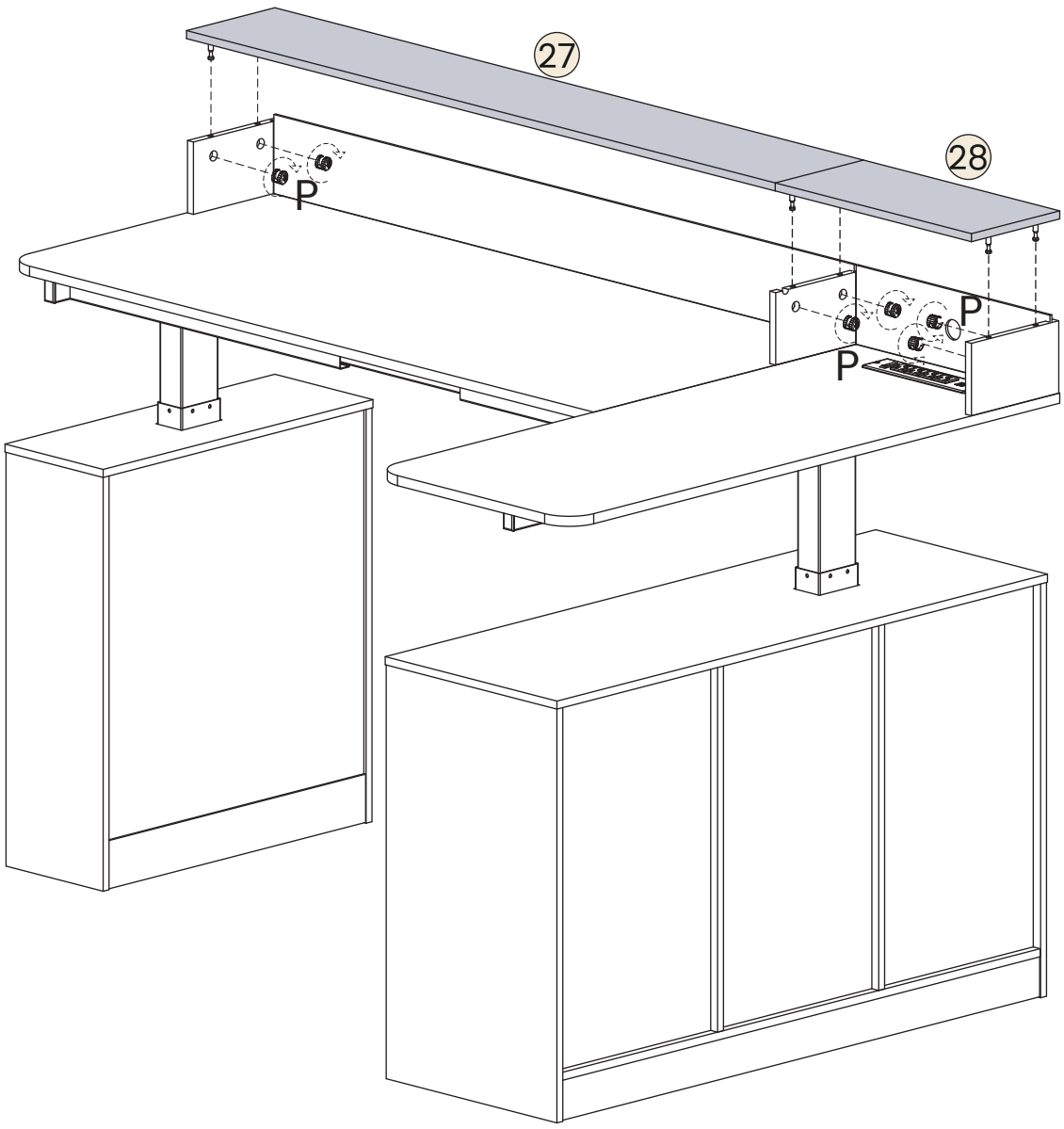

43

K x2

M4X12MM

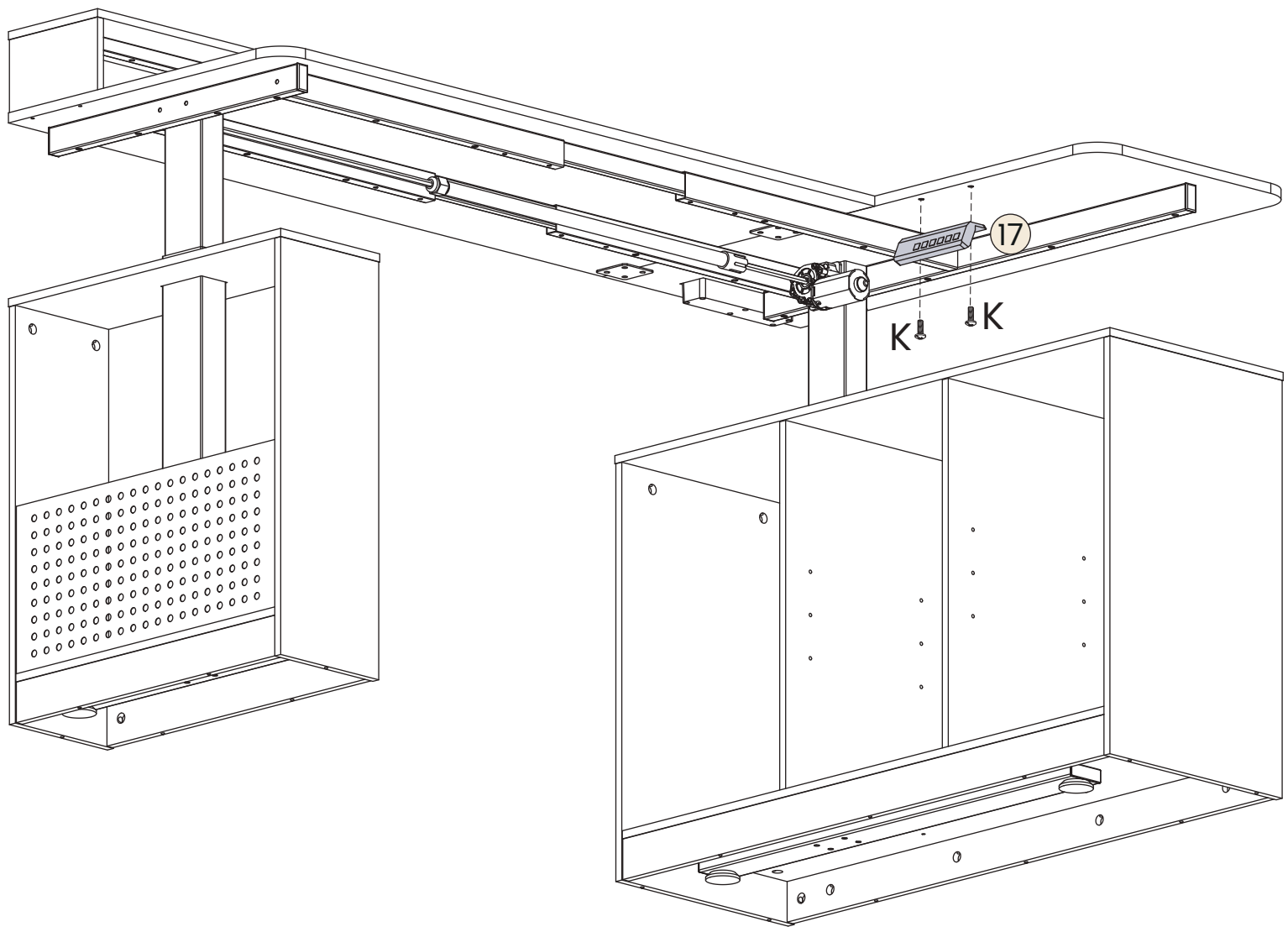

44

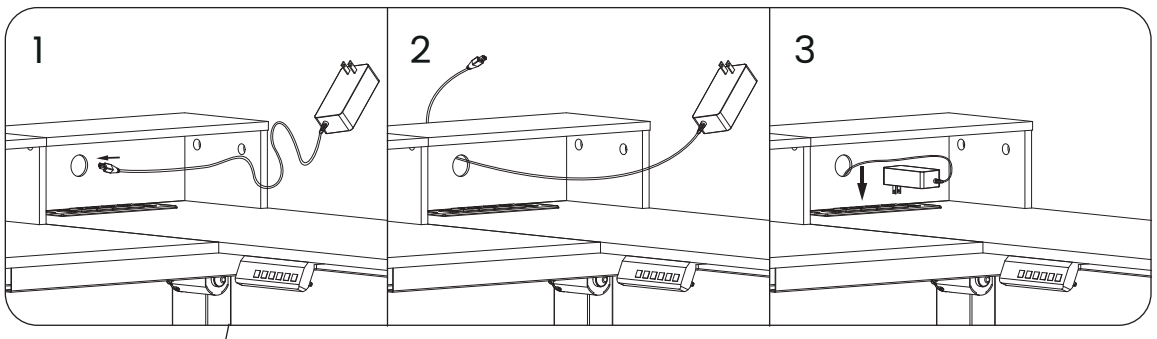

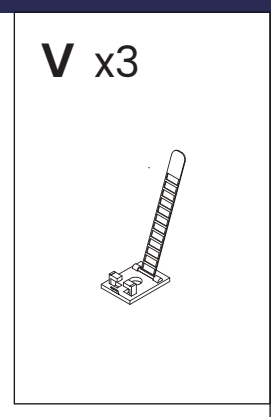

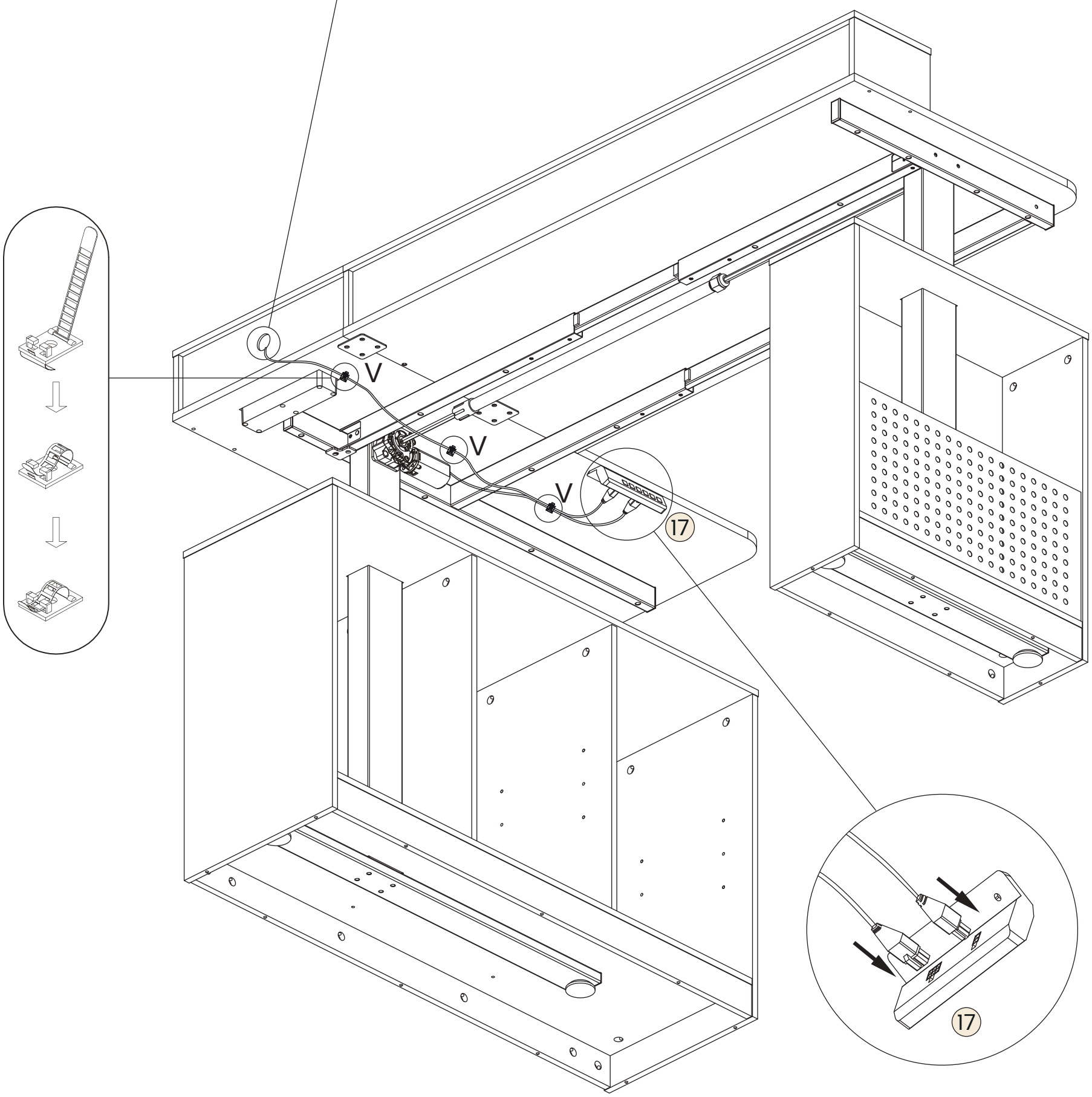

Assembly Instruction

45

Q x1	U x3
	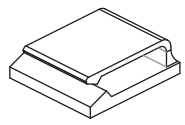

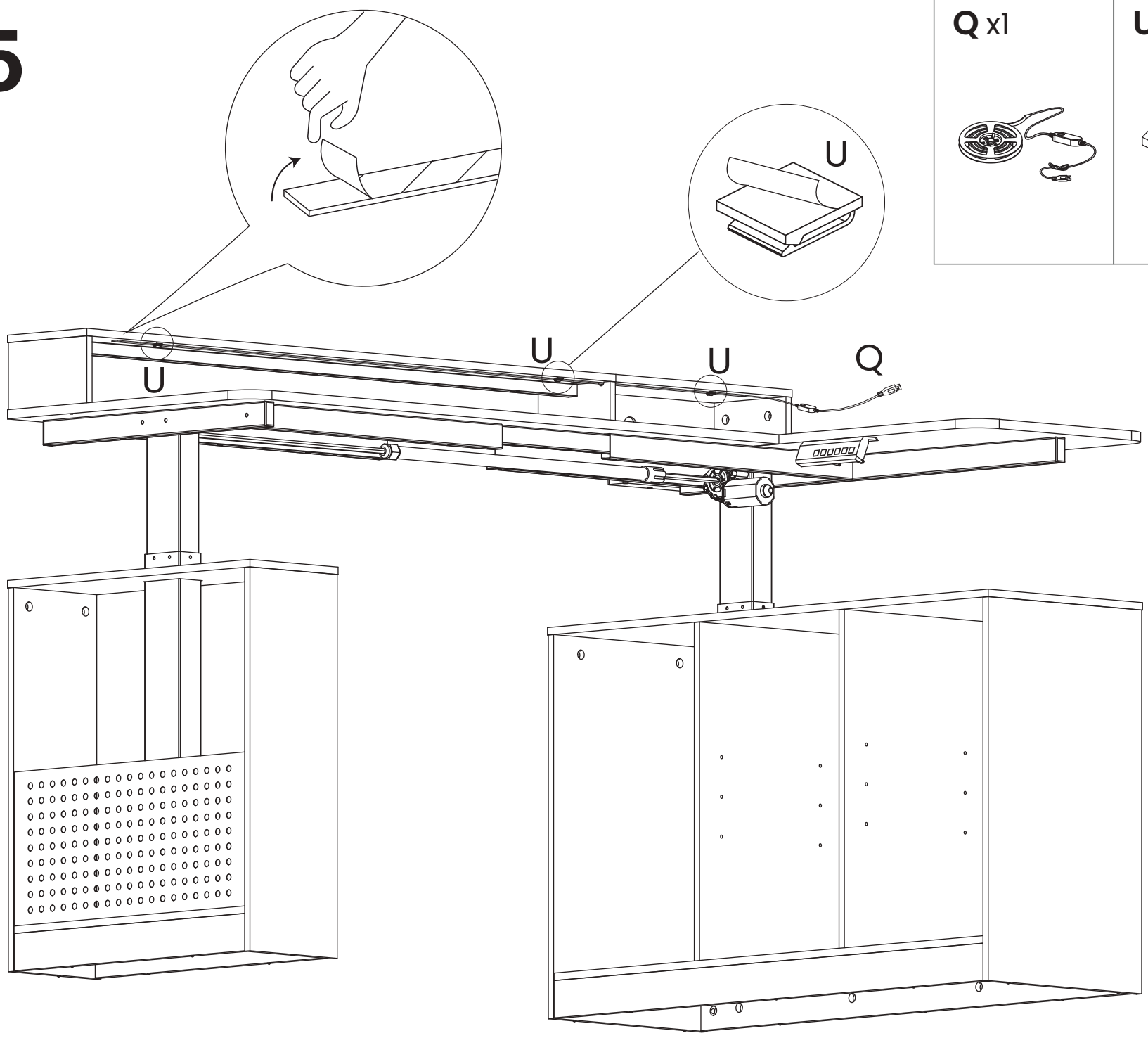

1	2	3
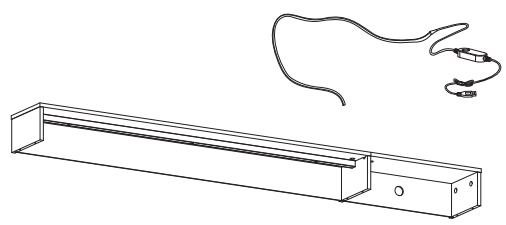	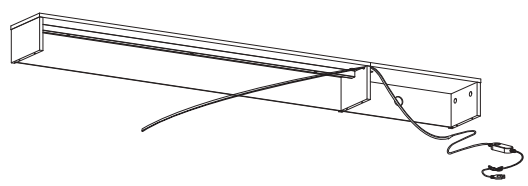	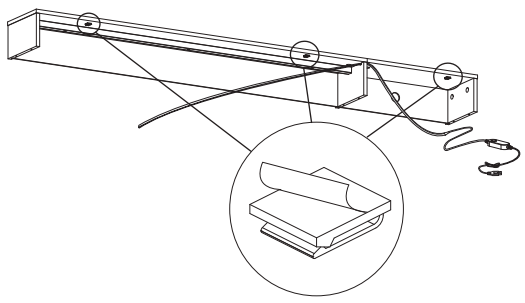
4 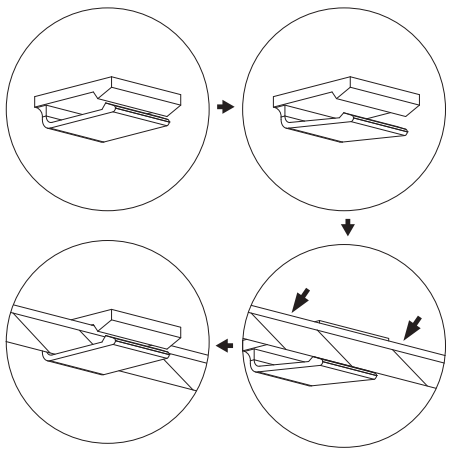	5 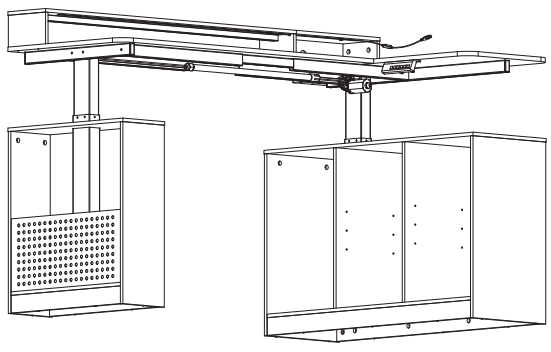	6 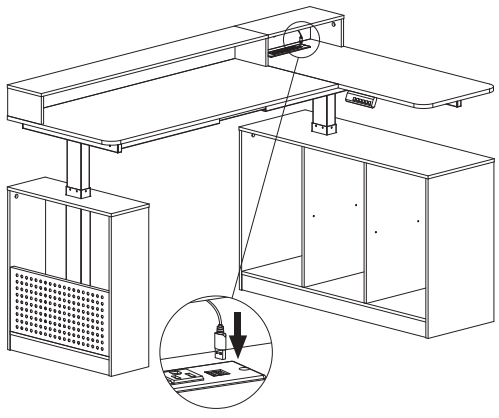

46

N x8

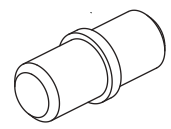

Ø5MM

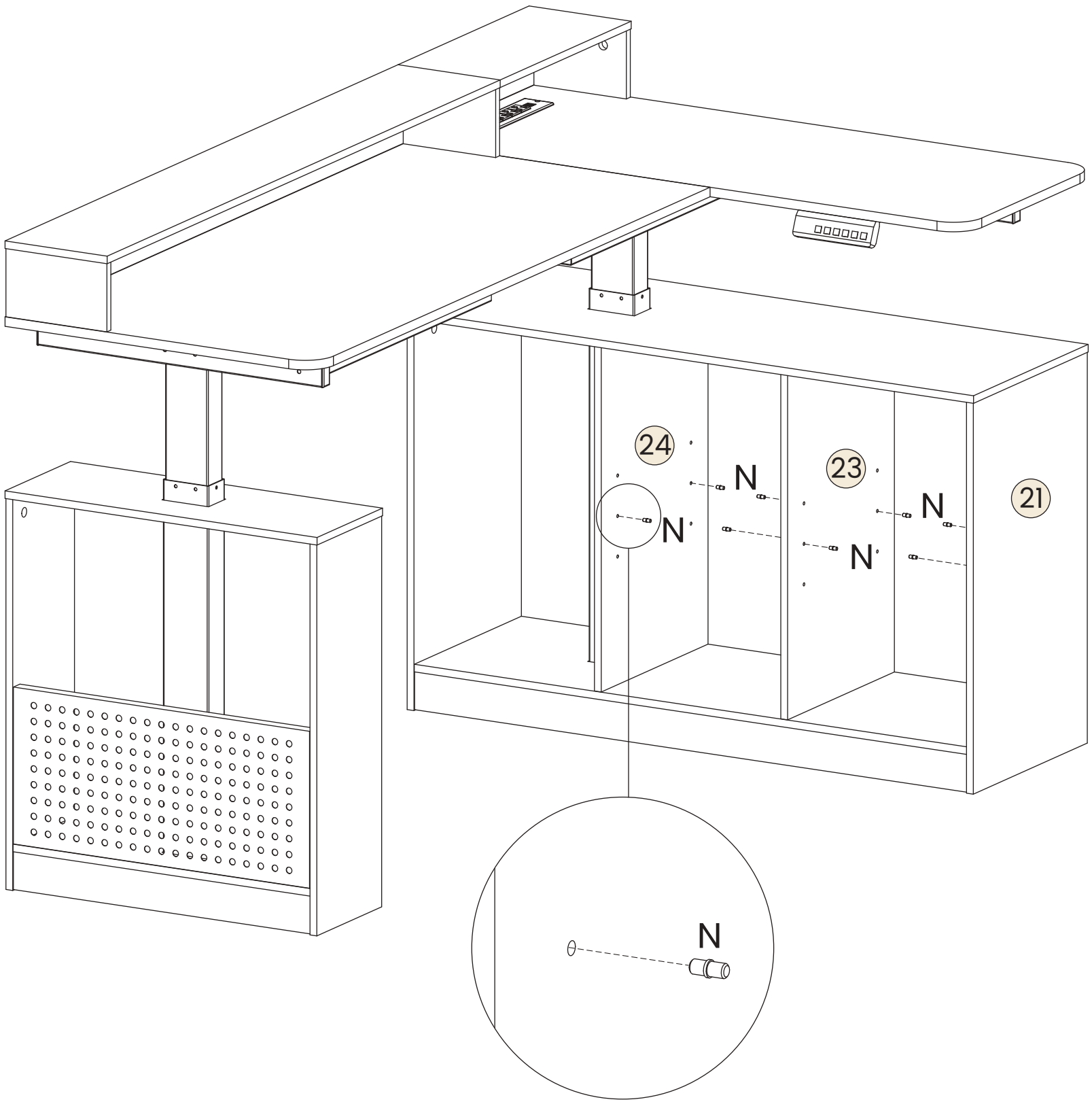

47

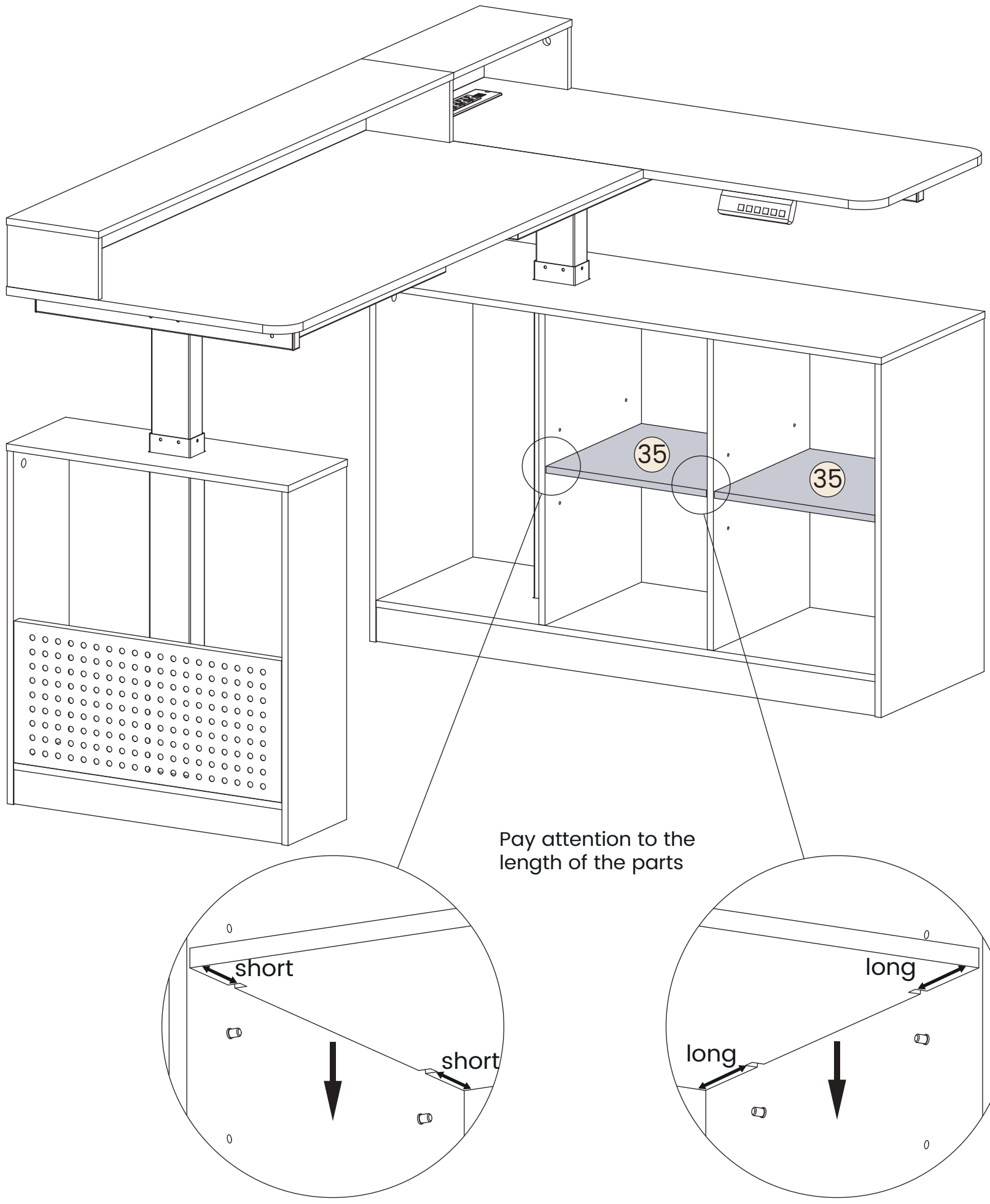
35
35
Pay attention to the
length of the parts
short
short
long
long

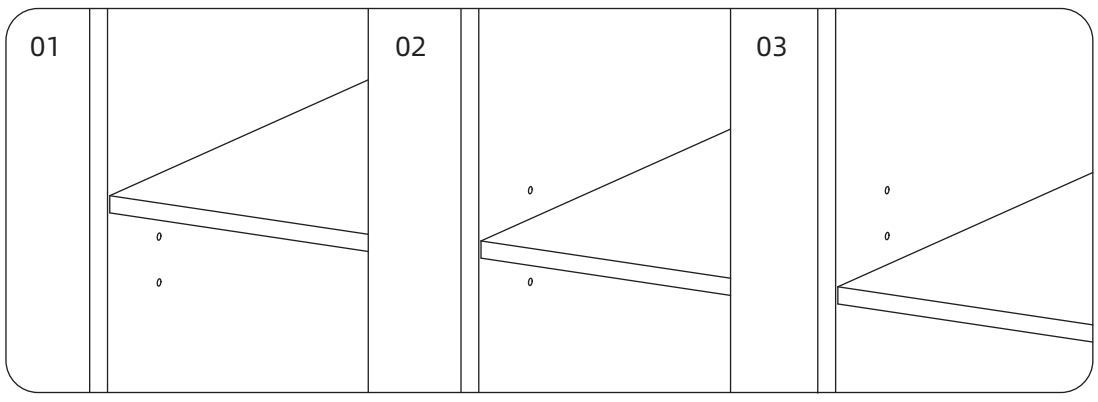
01
02
03

48

F x24	L x24
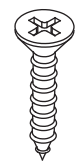 ST4x14MM	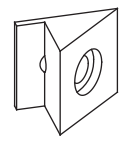

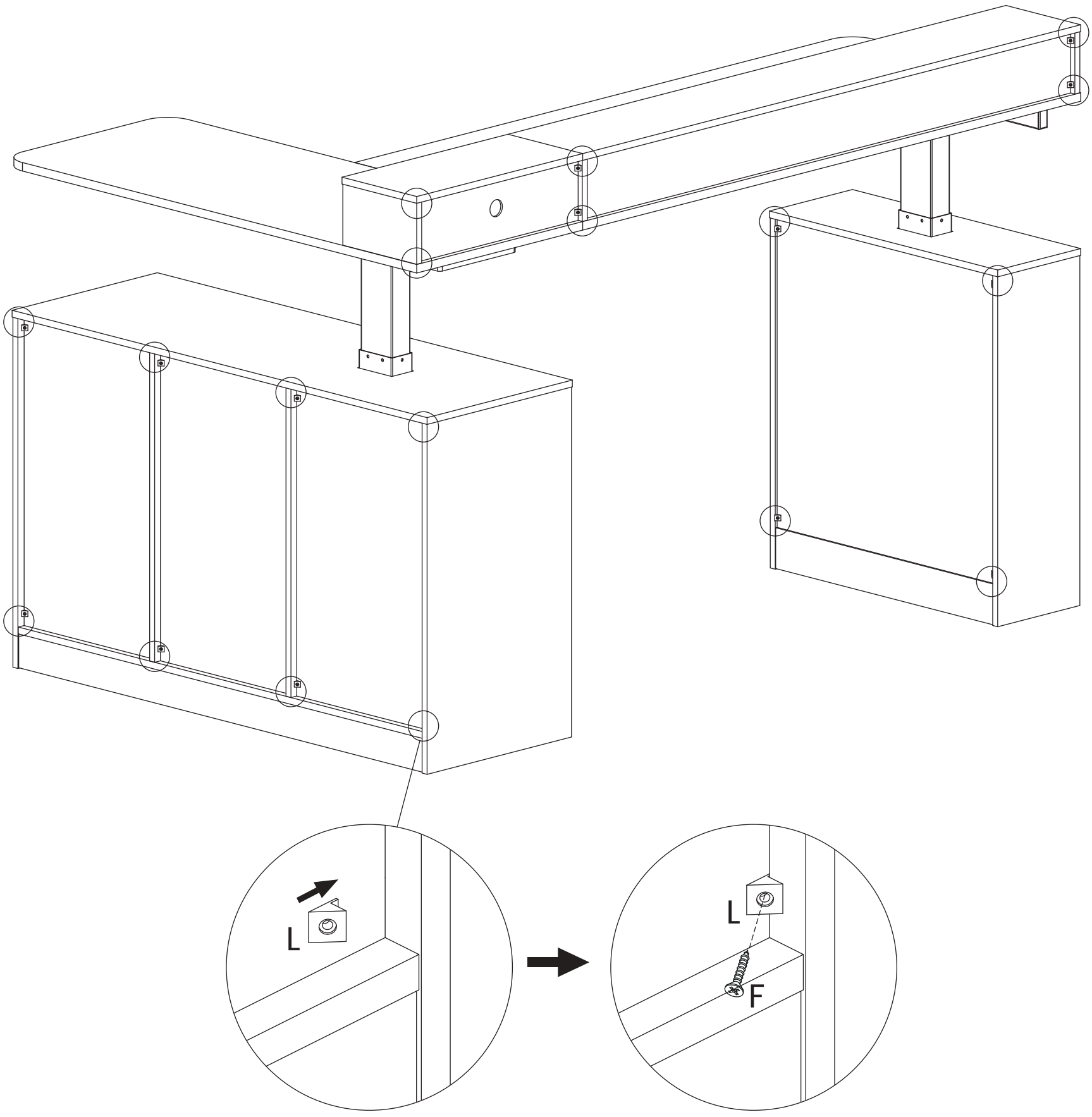

Instructions for using the hand controller

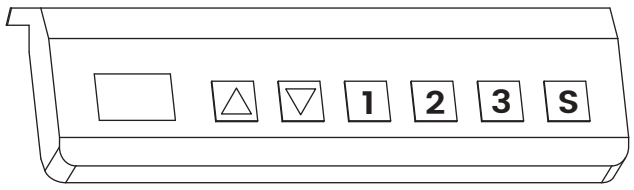

△	Up arrow key, adjust the standing desk to move upwards
▽	Press the down arrow to adjust the height of the standing desk to move upwards
1	Memory key 1, the first height saved by the user
2	Memory key 2, the second height saved by the user
3	Memory key 3, the third height saved by the user
S	Set key, used by users to set parameters

Table lifting and lowering

- Just hold down the "△" or "▽" key to control the height-adjustable table to rise or fall.
- Press and hold the "△" key to control the height-adjustable table to rise, and you can see the increase in height (the displayed number) on the three-digit digital tube;Press and hold the "▽" key to control the descent of the height-adjustable table. You can see the decrease in height (the displayed number) on the three-digit digital tube.

The invocation and setting of memory height

On the height display interface, press the number keys to call up the corresponding height, and the height-adjustable table will automatically run to the corresponding position.

On the height display interface, briefly press the S key, and the height value will start to flash. At this point, press the number keys (1, 2, 3) to record the current height to the corresponding position. If the flashing display shows no number keys pressed within 6 seconds, the memory mode will be exited.

Screen-off wake-up

If there is no key operation for a long time, the digital tube will automatically turn off. At this time, pressing any key will light up the digital tube.

Parameter setting

01 After holding down the S key for 3 seconds, the digital tube will display "S--" and start flashing.

02 Press the S key again to enter the Settings mode, and the function names will be displayed. The functions for which parameters can be set include:

- The display Unit for table height: Unit (Un);
- The Force of Collision protection: Collision Force (CF);

The functions of each key in the setting mode:

1	The back key can be used to go back to the previous level of the menu
△ ▽	Option switching
S	Confirmation key (Confirm entry to the next-level menu of the current interface or confirm selection of the current parameter item)

If no key is pressed within 20 seconds, exit the Settings mode

Main menu interface	Submenu interface	Description
CF Collision Force	OFF off	After entering, the last set collision force level will be displayed. The "△" and "▽" keys can be used to flip among the options (Off, L, N, H). After selection, press the S key to save the current option value and keep the current option displayed for 2 seconds before exiting the setting mode.
	L Light	
	n Normal	
	H Heavy	

Protection and Alarm

Display	Display	Method
E02	Problem	When the desktop vibrates, is hit or tilts during movement, an alarm will sound and the movement will stop immediately. The reverse movement will be automatically released after setting the distance, or any key can be pressed during the reverse operation to stop and release it. It is necessary to check and ensure that the table does not vibrate significantly, hit obstacles or tilt during operation before running.
Hot	Overheat protection	Continuous long-term operation may activate this protection. Power on again or wait for at least 15 minutes before use.
E10	Motor abnormal protection	The power should be cut off. Recheck and ensure that the connection between the motor and the controller is reliable, and then reconnect the power.
E20	Overload protection	If this alarm occurs when running upward, some heavy objects on the table should be removed before running again. If this alarm occurs when running downward, power should be cut off, some heavy objects on the table removed, and then power should be restored.
E31	Under-voltage protection	The power should be cut off. Recheck and ensure that the connection between the power supply and the controller is reliable, and then reconnect the power.
E32	Overvoltage protection	The power should be cut off. Recheck and ensure that the connection between the power supply and the controller is reliable, and then reconnect the power.
Trip reset		When in the "E10, E20" alarm state or after reaching the lowest height position, hold down the key for 3 seconds. After the display (Reset) is shown, release it. The height-adjustable table will start to move downward to the bottom and rebound to a certain height. Once the reset is completed, the lowest height will be displayed.

3-years Warranty

We guarantee your product is free from defects in product materia and workmanship for three(3) years starting from the date of purchase during normal use of household conditions.If your appliance fails to operate properly within our warranty period,We will send the corresponding accessories,Replacement is free and all shipping costs are covered

Quick Response within 24 Hours

If you are still unable to resolve the issue, please contact us through the Amazon order page for customer support. Whether the product has been installed or not, our customer support team will respond within 24 hours and assist you promptly.

Problems You May Encounter

Part	Problem	Solution
Cloth drawers	Why use cloth drawers	1. Reducing tree extraction is more environmentally friendly 2. More convenient to use and assemble 3. Reduced the thickness of the side panel, resulting in a larger actual storage space
Whole Produc	Parts are missing, defective or having wrong parts in package	You can contact us and we will get back to you within 24 hours
	Having issue(s) while reading the instruction or completing the assembly	Feel free to contact us and we will get back to you within 24 hours
	Encountering non-human caused damage during usage	If the product is damaged due to non-human causes, please keep the product and send us photos of it. We will ascertain the cause of the product damage within 48 hours and provide you with a satisfactory solution
Table Surface	Board surface is broken, scratched or lacks some screw holes	Feel free to contact us and we will get back to you within 24 hours
	The screw holes on the board and the steel frame don't line up	1. Please tighten the screws on the board by 70%, do not tighten completely 2. Adjust board and steel frame until the screw holes are lined up, then tighten all the screws
	The desk board is uneven or not tight, has gaps after being assembled	1. Loosen the screws in the uneven or gap positions; adjust until the desktops are flat and tight, then tighten the screws 2. If your problem still can't be solved, please feel free to contact us
Steel Frame	The steel frame is bent, broken, painted, rusted or damaged	Feel free to contact us and we will get back to you within 24 hours
	The table is unstable after being assembled	1. Check if the screws are tightened 2. Read through the manual, check if there are any parts installed incorrectly or missing assembly 3. If your problem still can't be solved, please feel free to contact us
	Encountering non-human caused damage during usage	If the product is damaged due to non-human causes, please keep the product and send us photos of it. We will ascertain the cause of the product damage within 48 hours and provide you with a satisfactory solution

Thank you
for choosing our product

Made In China

SEDETA