Installation Manual

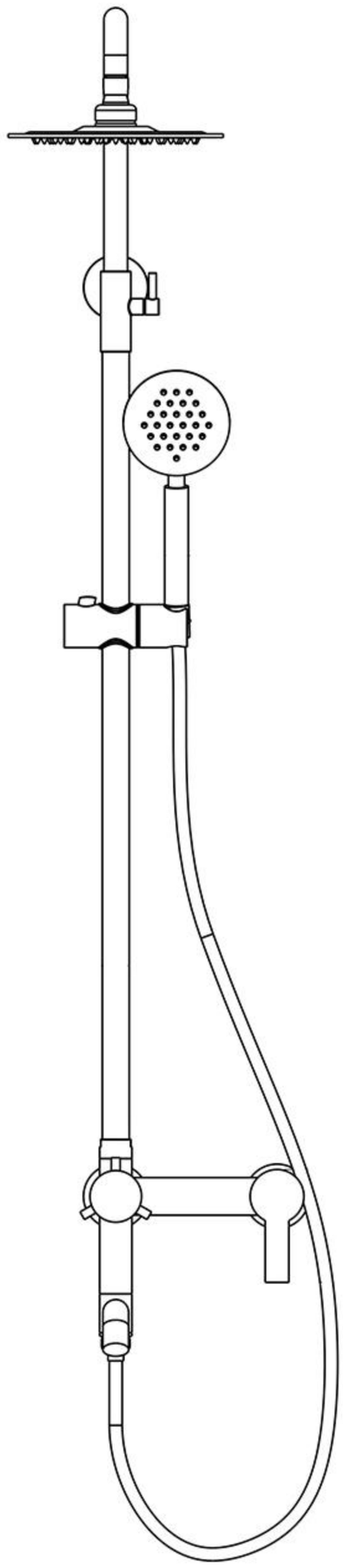

IAPMO RESEARCH AND TESTING, INC.

5001 East Philadelphia Street, Ontario, California 91761-2816 • (909) 472-4100 Fax (909) 472-4244 • www.iapmo.org

CERTIFICATE OF LISTING

IAPMO Research and Testing, Inc. is a product certification body which tests and inspects samples taken from the supplier's stock or from the market or a combination of both to verify compliance to the requirements of applicable codes and standards. This activity is coupled with periodic surveillance of the supplier's factory and warehouses as well as the assessment of the supplier's Quality Assurance System. This listing is subject to the conditions set forth in the characteristics below and is not to be construed as any recommendation, assurance or guarantee by IAPMO Research and Testing, Inc. of the product acceptance by Authorities Having Jurisdiction.

Effective Date: August 2013 — Void After: August 2014

Product: Plumbing Fixture Fittings — File No. 8737

Issued To: Kaiping Heart Cartridge Co., Ltd.
No. 28 Neihuan Dong Road,
Shuikou Town,
Kaiping City, GUANDONG
China

Identification: Plumbing supply fittings complying with this Standard shall be marked with the manufacturer's recognized name, trademark, or other mark or, in the case of private labeling, the name, trademark or other mark of the customer for whom the fitting was manufactured. The marking shall be accomplished by use of a permanent mark or by placing a permanent label on the product. Markings on plumbing supply fittings shall be visible after installation.

Single-handle, single-control, and automatic compensating mixing bath and shower valves shall have identifiable temperature control settings in which the settings are indicated by words ("cold", "warm", "hot", etc.), by numbers, or graphically.

Packages shall be marked with the manufacturer's name, trademark, or other mark as well as the model number or, in the case of private labeling, the name, trademark, or mark of the customer for whom the fitting was manufactured as well as the model number.

Chairman, Product Certification Committee — CEO, The IAPMO Group

This listing period is based upon the last date of the month indicated on the Effective Date and Void After Date shown above. Any change in material, manufacturing process, marking or design without having first obtained the approval of the Product Certification Committee, or any evidence of non-compliance with applicable codes and standards or of inferior workmanship, may be deemed sufficient cause for revocation of this listing. Production of or reference to this form for advertising purposes may be made only by specific written permission of IAPMO Research and Testing, Inc. Any alteration of this certificate could be grounds for revocation of the listing.

IAPMO RESEARCH AND TESTING, INC.

5001 East Philadelphia Street, Ontario, California 91761-2816 • (909) 472-4100 Fax (909) 472-4244 • www.iapmo.org

CERTIFICATE OF LISTING

IAPMO Research and Testing, Inc. is a product certification body which tests and inspects samples taken from the supplier's stock or from the market or a combination of both to verify compliance to the requirements of applicable codes and standards. This activity is coupled with periodic surveillance of the supplier's factory and warehouses as well as the assessment of the supplier's Quality Assurance System. This listing is subject to the conditions set forth in the characteristics below and is not to be construed as any recommendation, assurance or guarantee by IAPMO Research and Testing, Inc. of the product acceptance by Authorities Having Jurisdiction.

The most updated information on this Certificate of Listing is available online at pld.iapmo.org

Effective Date: October 2016 -Rev. 11/28/2016- — Void After: October 2017

Product: Flexible Water Connectors — File No. 4955

Issued To: Yuhuan Jianglin Plumbing Hose & Parts Co., Ltd.
Package Industry Zone
Yuhuan County
Zhejiang 317600,
China

Identification: Manufacturer's name or trademark and cUPC® certification mark. Special note on label "For use with water in exposed locations only."

Characteristics: Flexible water connectors manufactured in various sizes, lengths and metal end fittings for hot or cold water applications that consist of an inner tube, which may or may not have an outer braided cover. Connectors are to be installed for use in accessible locations only and in accordance with the manufacturer's instruction, and the latest edition of the Uniform Plumbing Code.

Products listed on this certificate have been tested by an IAPMO R&T recognized laboratory. This recognition has been granted based upon the laboratory's compliance to the applicable requirements of ISO/IEC 17025.

Products are in compliance with the following code(s):
Uniform Plumbing Code (UPC®)

Chairman, Product Certification Committee — CEO, The IAPMO Group

This listing period is based upon the last date of the month indicated on the Effective Date and Void After Date shown above. Any change in material, manufacturing process, marking or design without having first obtained the approval of the Product Certification Committee, or any evidence of non-compliance with applicable codes and standards or of inferior workmanship, may be deemed sufficient cause for revocation of this listing. Production of or reference to this form for advertising purposes may be made only by specific written permission of IAPMO Research and Testing, Inc. Any alteration of this certificate could be grounds for revocation of the listing. This document shall be reproduced in its entirety.

IAPMO RESEARCH AND TESTING, INC.

5001 East Philadelphia Street, Ontario, California 91761-2816 – USA • 909-472-4100 • 909-472-4244 • www.iapmort.org

CERTIFICATE OF LISTING

IAPMO Research and Testing, Inc. is a product certification body which tests and inspects samples taken from the supplier's stock or from the market or a combination of both to verify compliance to the requirements of applicable codes and standards. This activity is coupled with periodic surveillance of the supplier's factory and warehouses as well as the assessment of the supplier's Quality Assurance System. This listing is subject to the conditions set forth in the characteristics below and is not to be construed as any recommendation, assurance or guarantee by IAPMO Research and Testing, Inc. of the product acceptance by Authorities Having Jurisdiction.

The most updated information on this Certificate of Listing is available online at pld.iapmo.org

Effective Date: November 2016 -Rev. 3/1/2017- — Void After: November 2017

Product: Plumbing Fixture Fittings — File No. 4528

Issued To: Neoperl Inc.
171 Mattatuck Heights
Waterbury, CT 06705

Identification: Each fitting component shall bear permanent legible markings to identify the manufacturer. This marking shall be the trade name, trademark, or other mark known to identify the manufacturer. The product shall also bear all other markings required by the standard. The marking shall be located where it can be readily seen after installation is complete. The product or packaging shall also bear the cUPC® certification mark.

Characteristics: Plumbing fixture fitting components to be installed in accordance with the manufacturer's instructions and the requirements of the latest edition of the Uniform Plumbing Code.

Products listed on this certificate have been tested by an IAPMO R&T recognized laboratory. This recognition has been granted based upon the laboratory's compliance to the applicable requirements of ISO/IEC 17025.

Products are in compliance with the following code(s):
Uniform Plumbing Code (UPC®)
National Plumbing Code of Canada

Chairman, Product Certification Committee — CEO, The IAPMO Group

This listing period is based upon the last date of the month indicated on the Effective Date and Void After Date shown above. Any change in material, manufacturing process, marking or design without having first obtained the approval of the Product Certification Committee, or any evidence of non-compliance with applicable codes and standards or of inferior workmanship, may be deemed sufficient cause for revocation of this listing. Production of or reference to this form for advertising purposes may be made only by specific written permission of IAPMO Research and Testing, Inc. Any alteration of this certificate could be grounds for revocation of the listing. This document shall be reproduced in its entirety.

BEFORE INSTALLATION

▶ Notes before installation

1. Please check that all components are present.
2. Before installation ensure that all feed lines are clear of debris and on/off valve is present.
3. Pictures in the manual are general in content and may not represent exactly your purchased faucet.
   If you are having difficulties please contact a professional plumber.
4. If you will be away from home for an extended period you should shut off the main water supply.

▶ Recommend Tools And Materials

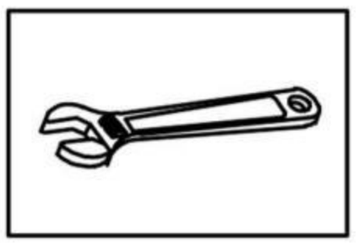
Adjustable Wrench

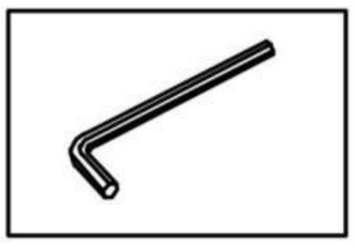
Hexagon wrench

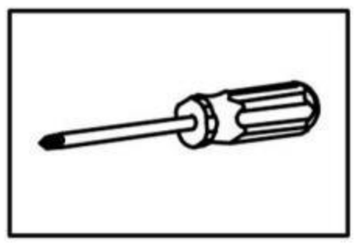
Philips Screwdriver

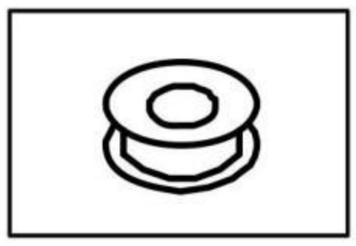
Pipe Tape

▶ Installation Dimension

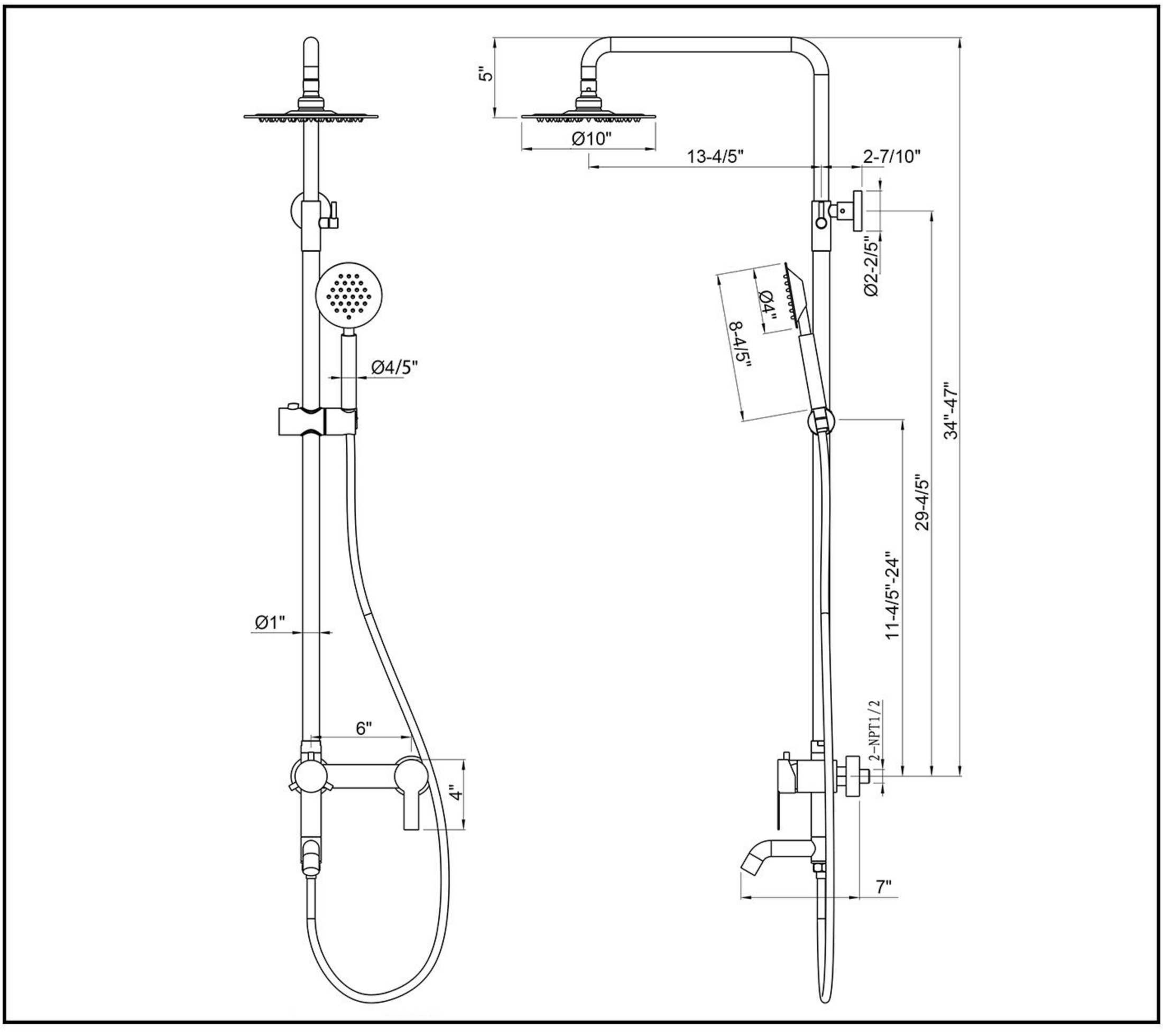

INSTALLATION STEPS

This product has been inspected and debugged by the factory to the best condition. Please do not disassemble and assemble it yourself.

Before installing the faucet, please be sure to remove sundries and sludge from the water pipe to prevent sundries from blocking the faucet.

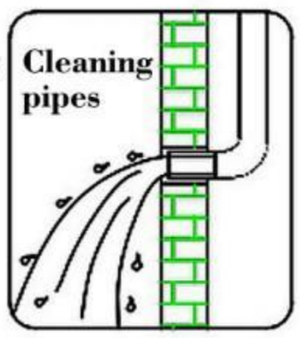

1. As shown, install the accessories and attach the tape.

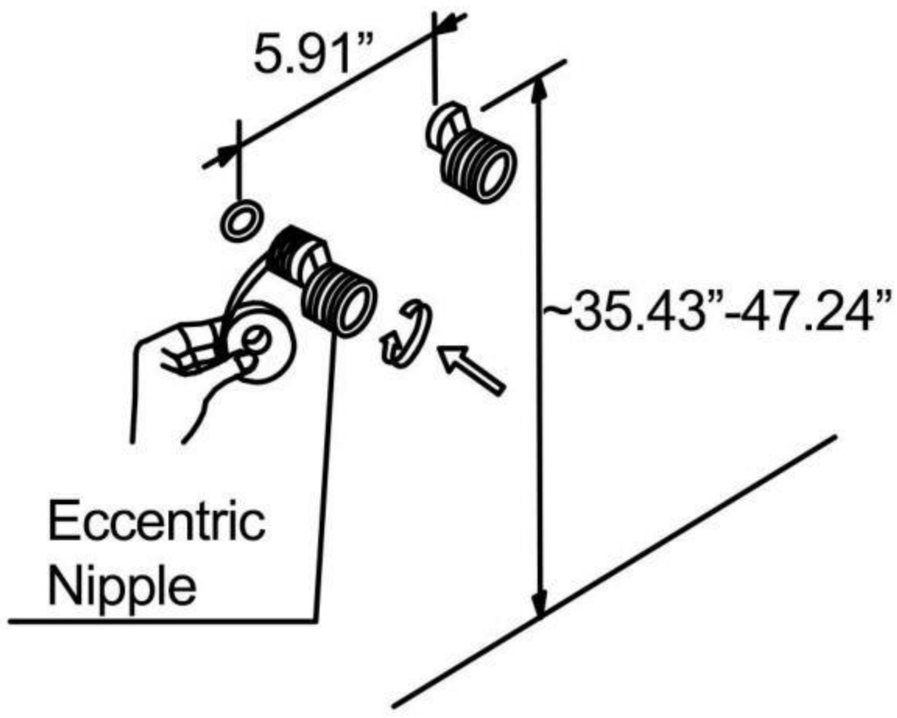

2. Install the main body and rubber pad.

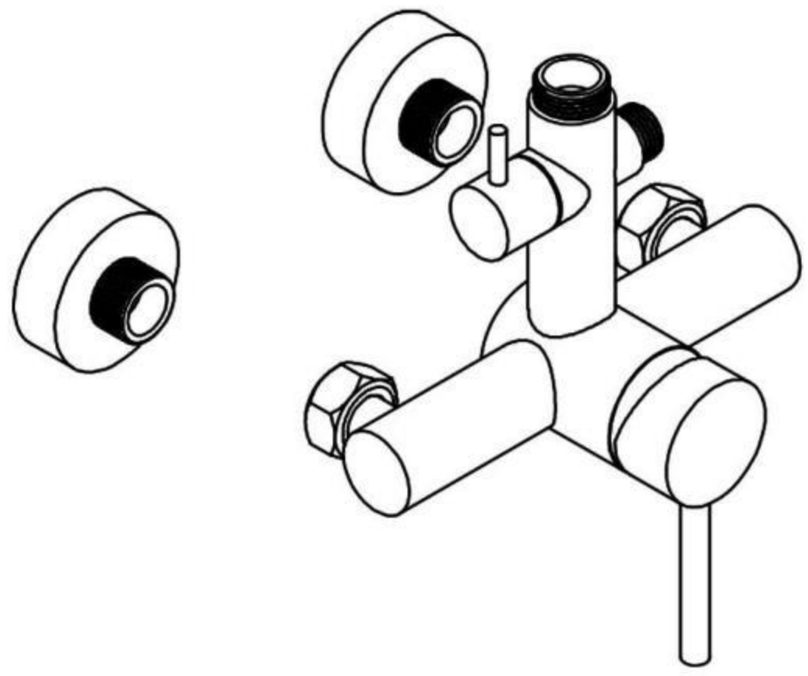

3. Install the riser on the faucet.

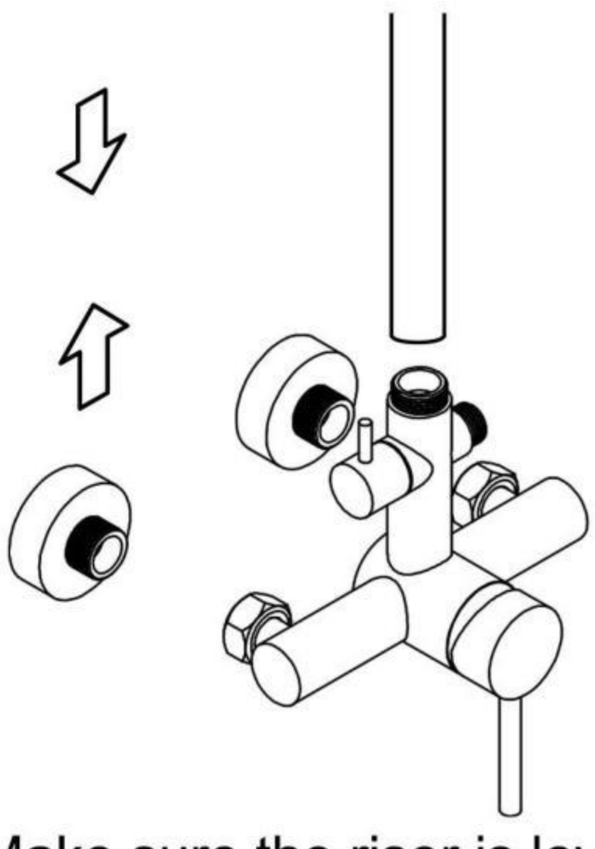

4. Install the mounting piece on the shower arm.

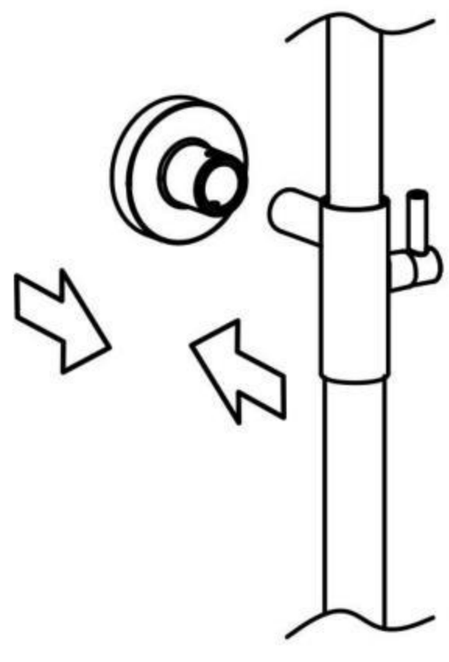

5. Make sure the riser is level, mark the position of the screw holes.

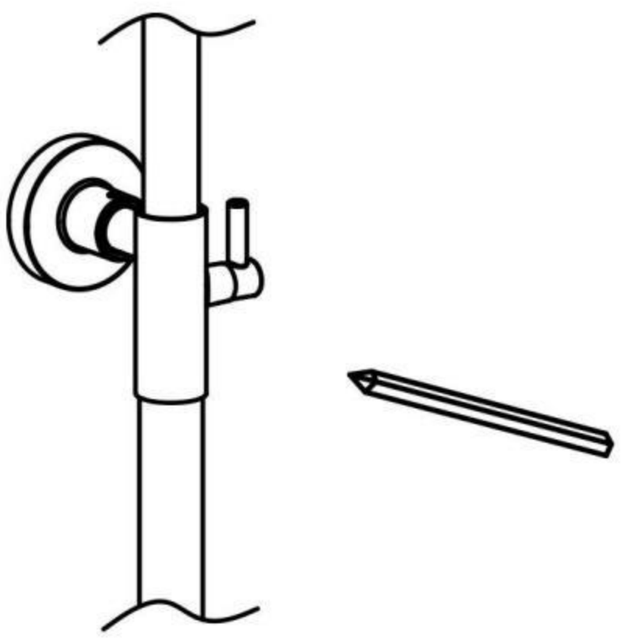

6. Remove the riser and the mounting piece.

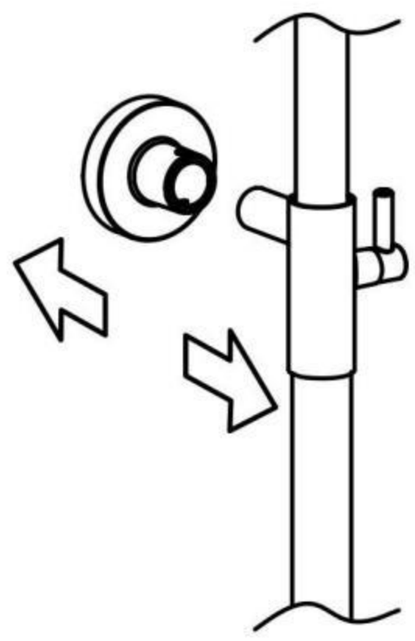

INSTALLATION STEPS

7. Drill the screw holes and install the anchors.
Install the mounting piece and mounting piece seal.

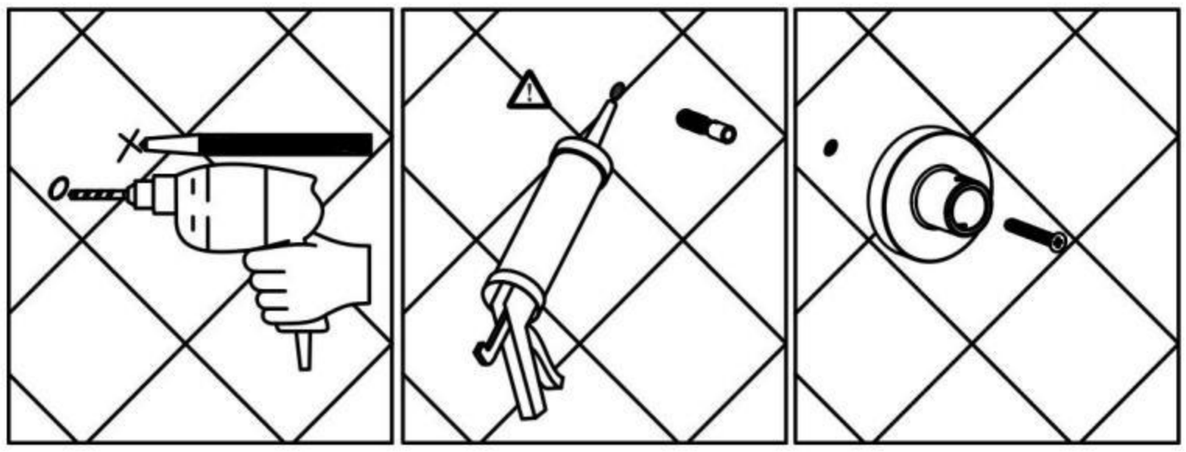

8. Install the riser on the faucet, tighten the screw.

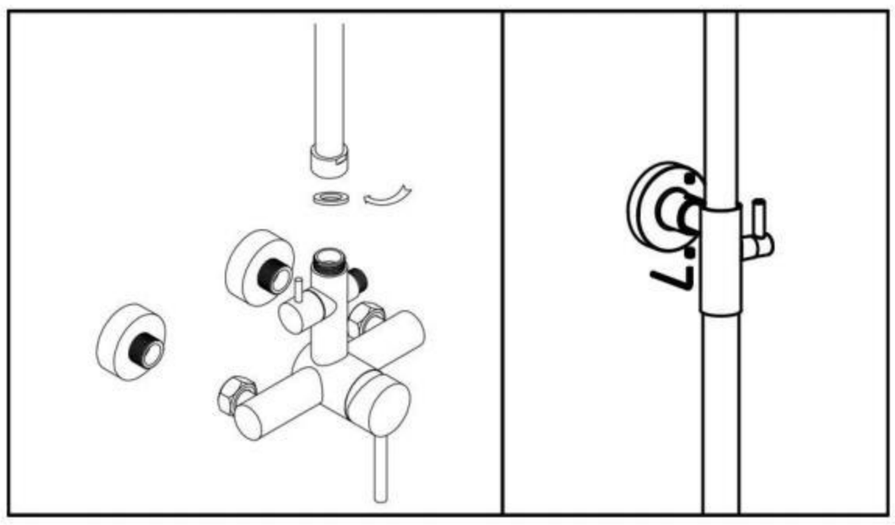

9. Install the shower rain head.

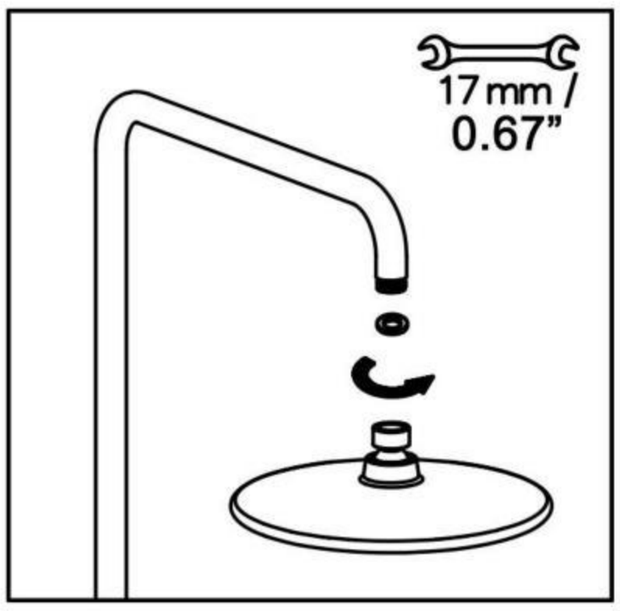

10. Place the hose washer in the short hose end connection Connect this end of the hose to the faucet. Place the screen washer in the long hose end connection. Install the hand shower on this end of the hose. Rest the hand shower in the holder.

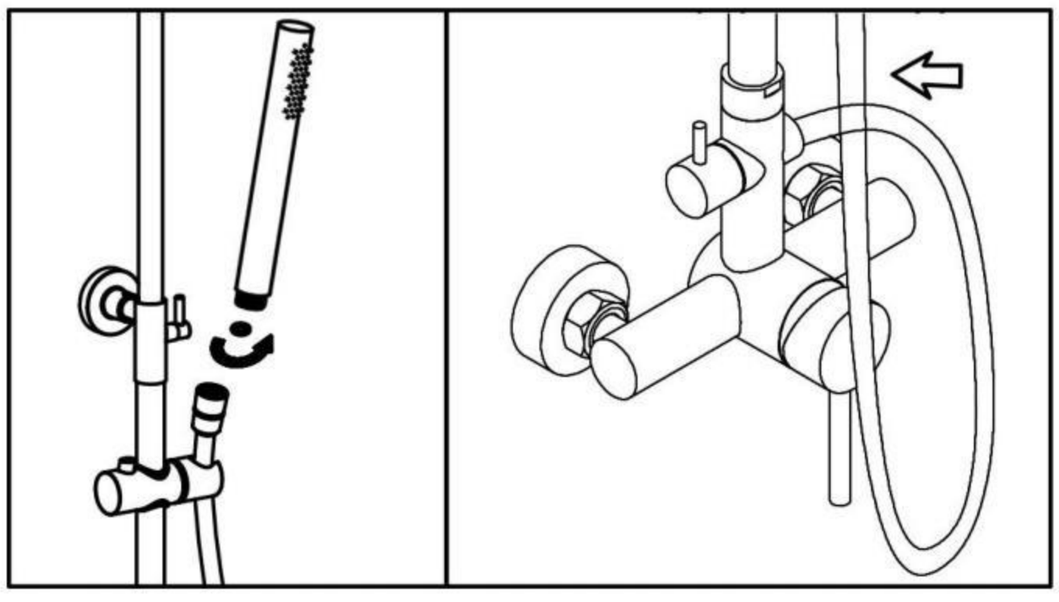

CLEANING CARE

In order to keep the appearance of faucet clean,bright and good performance, please take care of the faucet as follows;

1.Rinse with water only and dry with soff cotton cloth;

2.Use mild liquid and colorless glass cleaner to remove surface dirt and scale film, or use polish without abrasive effect;

3.Do not use abrasive deterfgent, polish, emery cloth, paper towel or scraper, etc.;

4.Do not use acid cleaner,or cleaner and soap with insoluble gran etc.;

5.In the process of use, mud my accumulate in the bubbler and make the water flow show, The bubbler can be unscrewed, rinsed with water, and then installed back in place.