fireplace

Product ID. 7AEY4

Scan for Support
support@garvee.com

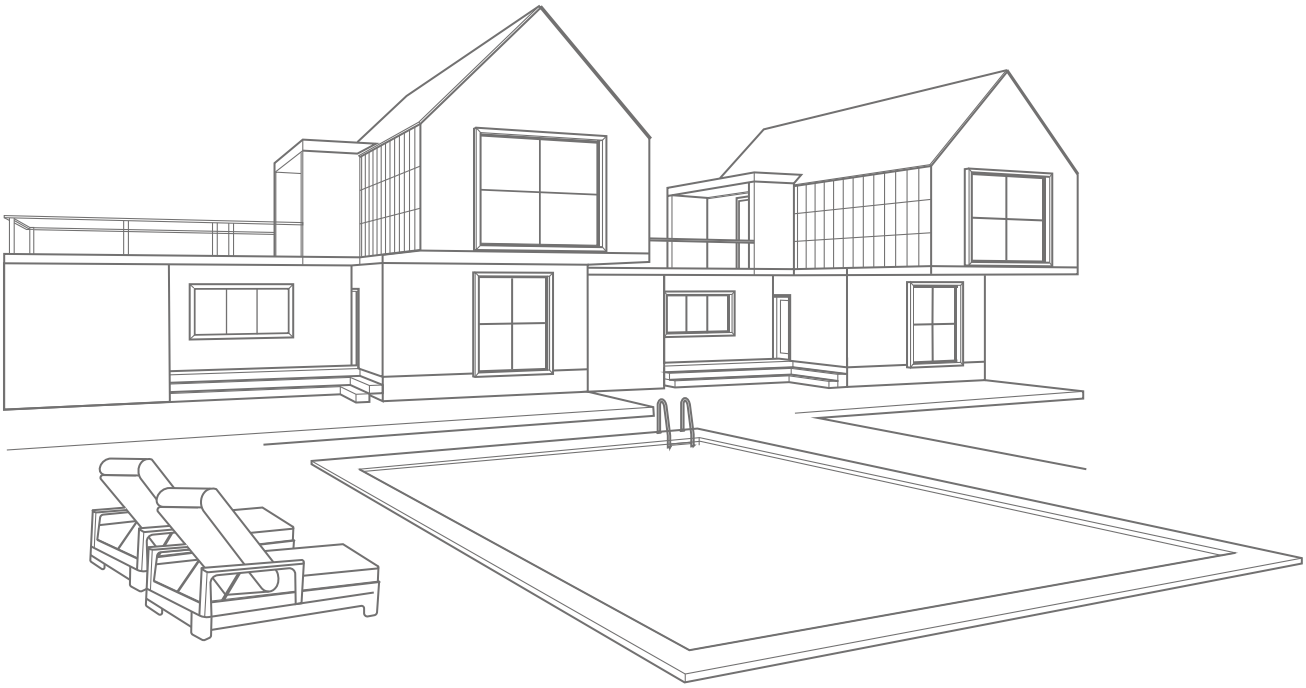

Distributed by
GARVEE.com

V260525D7LN

SKU:PHK_35VUNLDY

30" Insert Fireplace Heater

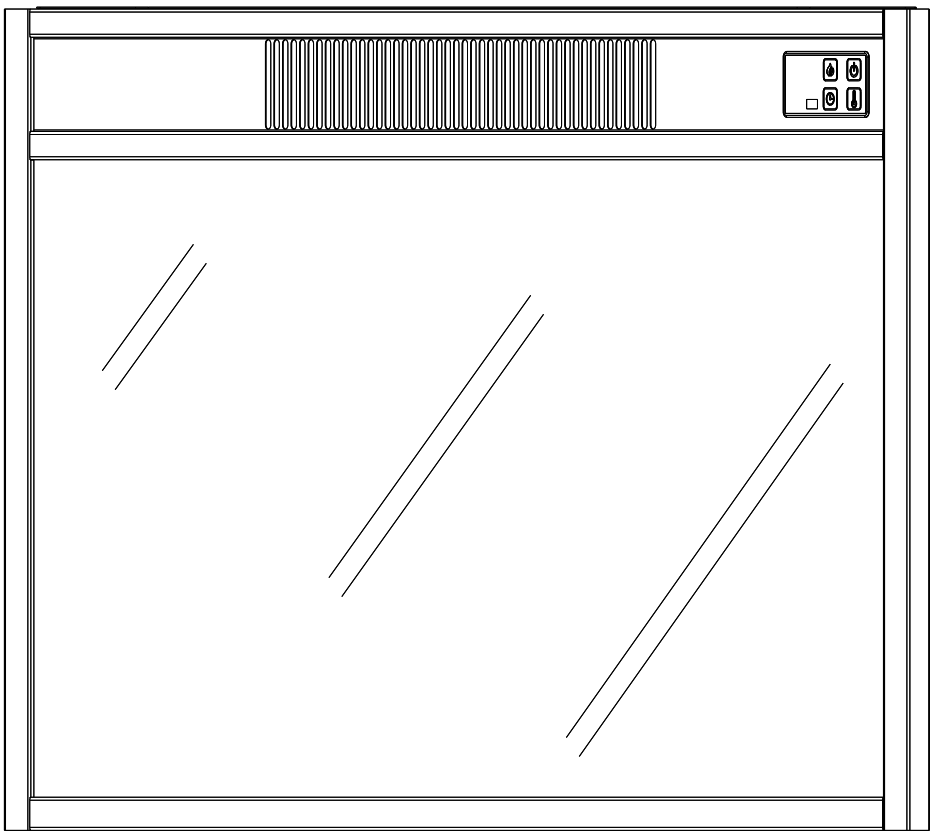

Team Assembly Recommended

Trouble shooting:

Missing / Wrong / Broken parts and installation issues

↓

Send email with your question, pic and order NO. to support@garvee.com

↓

Respond within 24 hours

↓

Issue resolved

TABLE OF CONTENT

Safety Information----------03

Technical Specification----------04

Package Content ----------04

Assembly Instruction----------05

User Instruction ----------07

Control Panel----------08

Remote Control ----------10

Care and Maintenance----------11

Trouble shooting ----------11

When using electrical appliances, basic safety precautions should always be followed including the following:

READ ALL INSTRUCTIONS BEFORE USE AND SAVE THESE INSTRUCTIONS

1. Read all instructions before using this heater.

2. Do not use this heater outdoors.

3. This heater is not intended for use in bathrooms, laundry areas and similar indoor locations. Never locate the heater where it may fall into a bathtub or other water container.

4. Do not run the power cord under carpeting. Do not cover the power cord with throw rugs, runners, or the like. Arrange the power cord away from traffic areas and where it will not be tripped over.

5.To disconnect the heater, turn it off, then remove the plug from the outlet.

6. Connect to properly grounded outlet only. Always plug the heater directly into a wall outlet/receptacle. Never use with an extension cord or reloadable power tap (outlet/power strip).

7. To prevent a possible fire, do not block operate the firebox on soft surfaces, like a bed, where openings may become blocked.

8. There is a thermostat limiter inside the heater. When the inner temperature overheat or abnormal heating occurs, the thermostat protective device cuts off the power supply to avoid fireplace from damaged or risk of fire.

9. Use the heater only as described in the manual. Any other use not recommended by the manufacturer may cause fire, electrical shock, or injury to persons.

10. ⚠WARNING: Manufacturer and seller expressly disclaim any and all liability for personal injury, property damage or loss, whether direct, indirect, or incidental, resulting from the incorrect attachment, improper use,inadequate maintenance, unapproved modification, or neglect of this product.

⚠ **WARNING:** There are no user-serviceable parts inside the fireplace or heater. If the unit appears to malfunction, turn it off, unplug it from the wall immediately, and contact Customer Service

⚠ **WARNING:** This heater becomes hot during use.
To avoid burns, do not let bare skin come into contact with hot surfaces.
If handles are provided, use them when moving this heater.
Keep combustible materials—such as furniture, pillows, bedding, papers, clothes, and curtains—at least 3 ft (0.9 m) away from the front of the heater, and also keep them away from the sides and rear.

⚠ **WARNING:** Extreme caution is necessary when any heater is used by or near children or invalids and whenever the heater is left operating and unattended.

⚠ **WARNING:** Always unplug the heater when not in use.

⚠ **WARNING:** Do not operate any heater with a damaged cord or plug or after the heater malfunctions, has been dropped, or damaged in any manner. Return the heater to an authorized service facility for examination, electrical or mechanical adjustment, or repair.

⚠ **WARNING:** Do not insert or allow foreign objects to enter any ventiliation or exhaust openings as this may cause an electric shock or fire, or damage to the heater.

⚠ **WARNING:** A heater has hot and arching or sparking parts inside. Do not use in areas where gasoline, paint, or flammable liquids are used or stored.

⚠ **CAUTION:** While the heater is in use, the top center of the fireplace can get hot to the touch, and may cause serious injury or burns. Always supervise small children around the fireplace/heater. Do not place any cloth or decorations over the heater outlet or fireplace, or otherwise obstruct the heater outlet of the fireplace, as this may cause a fire and serious injury.

TECHNICAL SPECIFICATION

Model Number	LT-3001NA
Dimensions (W x D x H)	30" x 5.15" x 17.1"
Net Weight	22.37lb
Gross Weight	25.19lb
Power Rating	1400 W
Voltage	120 V
Frequency	60 Hz

PACKAGE CONTENT

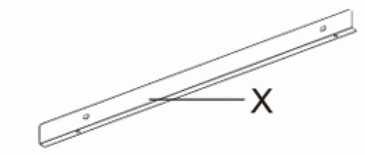

Top Trim

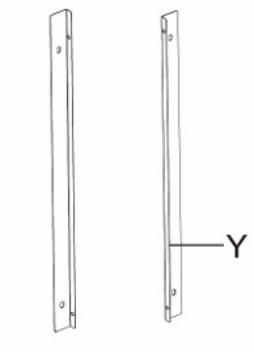

Side Trim(L/R)

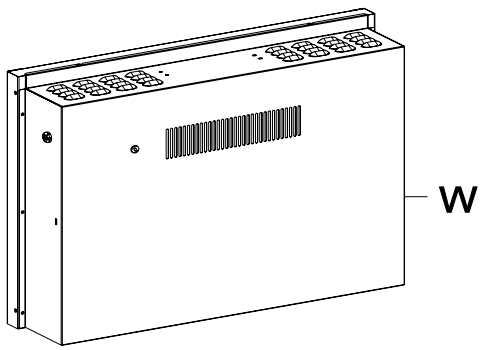

Fireplace Unit

Screw x12

Remote Control

ASSEMBLY INSTRUCTION

Estimated Time for Assembly

20:00

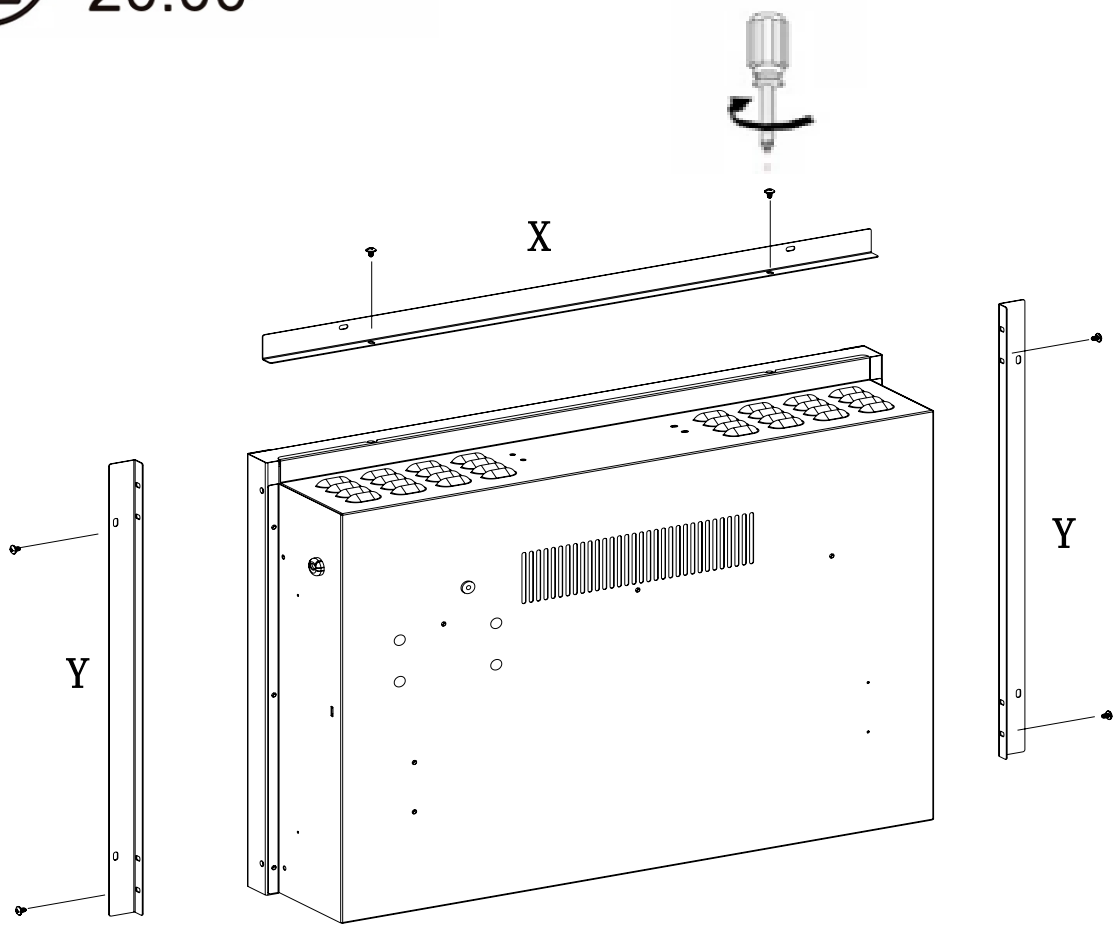

STEP1

Take out the unit from the box and layout all the spare parts for easy assembly. Make sure all small items are not left in packaging materials.

⚠ CAUTION

- This unit has a glass front panel. Use extreme caution when handling glass to prevent personal injury or damage.

STEP 2

Attach the top trim to the top of the unit and secure it by tightening 2 screws. Make sure the right ngle side faces toward the front of the unit.

Align and attach two side trims to the sides of the fireplace unit. Identify the right and the left and make sure the right angle side is faces toward the front of the unit.

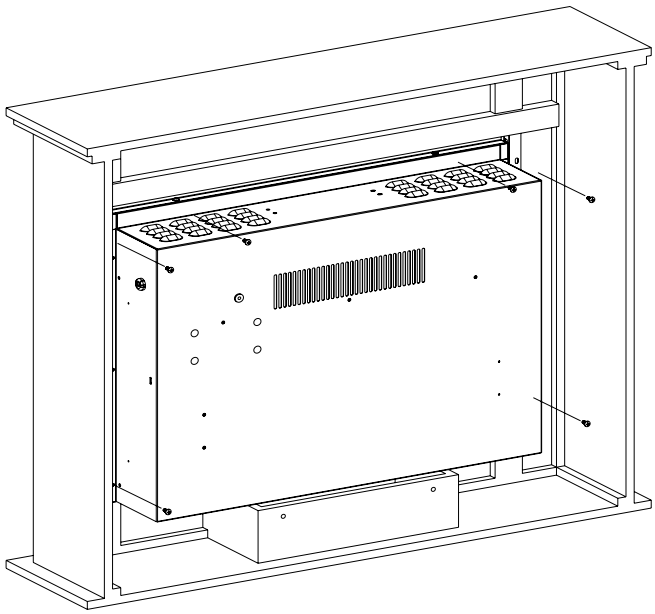

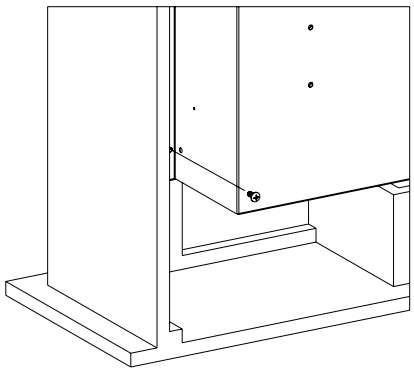

STEP 3

Carefully set the unit from the back of the mantel and center it in the opening.

Check the alignment and attach the unit to the mantel by inserting screws through the drilled holes on the trim to the mantel.

NOTE: Do not attempt to install the unit from the front of the mantel. It will not fit.

USER INSTRUCTION

Before Use

Check that the air intake and exhaust vents are not covered or obstructed in any way.

Keep all combustible objects at least 3 ft (0.9 m) away from the unit.

Plug the unit into a grounded power socket.

Grounding

This product must be grounded. In the event of a malfunction or breakdown, grounding provides a path of least resistance for electric current, reducing the risk of electric shock.

This unit comes with a standard 6 ft (1.8 m), three-wire power cord. Always plug the unit directly into a wall outlet.

Do not use an extension cord or relocatable power tap.

⚠ CAUTION / WARNING

- Improper connection of the equipment grounding conductor can result in a risk of electric shock. Check with a qualified electrician or serviceman if you are in doubt as to whether the product is properly grounded.
- DO NOT modify the plug provided with the product nor using any bypass device if the plug does not fit the outlet. Have a proper outlet installed by a qualified electrician.

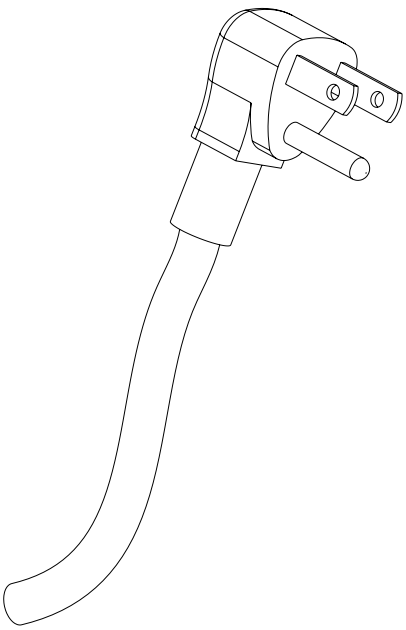

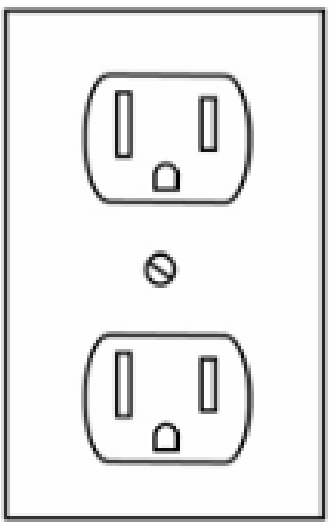

USER INSTRUCTION (CONTROL PANEL)

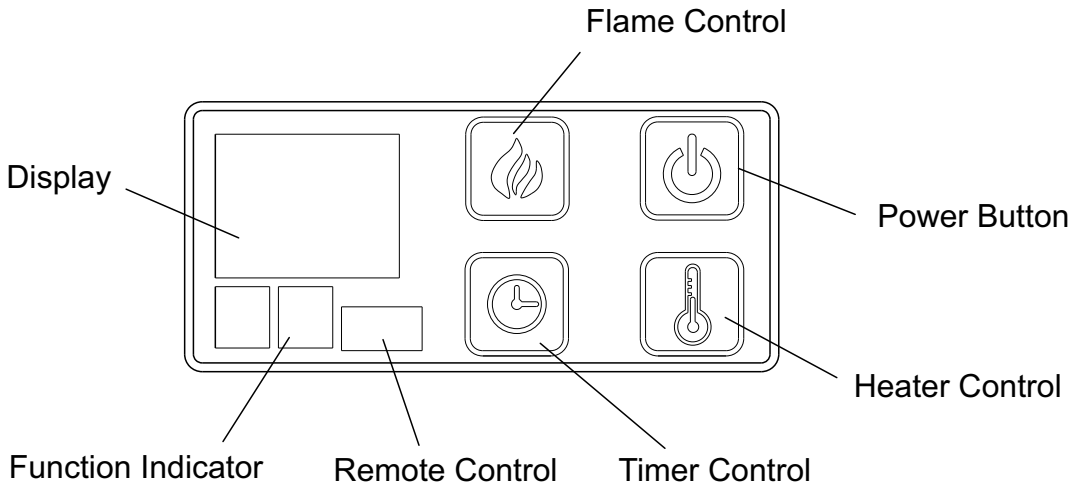

Control Panel

The control panel is located on the top right corner of the unit.

Power ON / OFF

Press the power button to turn on the unit. Press again to turn off the unit.
NOTE: There is a thermostat limiter inside the unit. When the inner temperature is too hot, the unit will automatically turned o ffto avoid damage to the product or risk of fire.

⚠ CAUTION / WARNING

- DO NOT unplug the unit when it shows " ON "

Flame Control

Press the flame control button to rotate and set flame effect levels. The flame setting are as follows:

Button Press	Flame Level	Display Value	Fireplace Appearance
1st Press	High	L3	Highest flame, logs glow
2nd Press	Medium	L2	Medium flame, logs glow
3rd Press	Low	L1	Low flame, logs glow
4th Press	OFF	None	OFF

Heater Control

Press the heater control to turn on and off the heater.

When the heater is turned on, press and hold the heater control button for 3 seconds to enter temperature adjustment mode. In adjustment mode , the display will flashes. There are 22 levels to change Fahrenheit temperature (ON ,62° F -82° F). After this is set,the display willflash 5 times and exit from setting status.

To switch from degree Fahrenheit to degree Celsius, press and hold the power button for 3 seconds when the heater is turned on. There are 12 levels to change Celsius temperature (ON ,17℃-27℃). Repeat the same process to convert Celsius to Fahrenheit .

Timer Control

Press the timer button to turn the timer on. The timer function can controls both the flame effect and heater.

The timer can set as the table suggested below:

Button Press	Timer Interval	Display
1st press	1 Hour	1h
2nd press	2 Hours	2h
3rd press	3 Hours	3h
4th press	4 Hours	4h
5th press	5 Hours	5h
6th press	6 Hours	6h
7th press	7 Hours	7h
8th press	8 Hours	8h
9th press	OFF	None

NOTE: The timer will only control the heater if the heater is the only function turned on when the timer is set.

NOTE: The timer will only control the flame effect if the flame effect is the only function turned on when the timer is set.

NOTE: The timer will control both the heater and flame effect if both functions are turned on before the timer is set.

USER INSTRUCTION (REMOTE CONTROL)

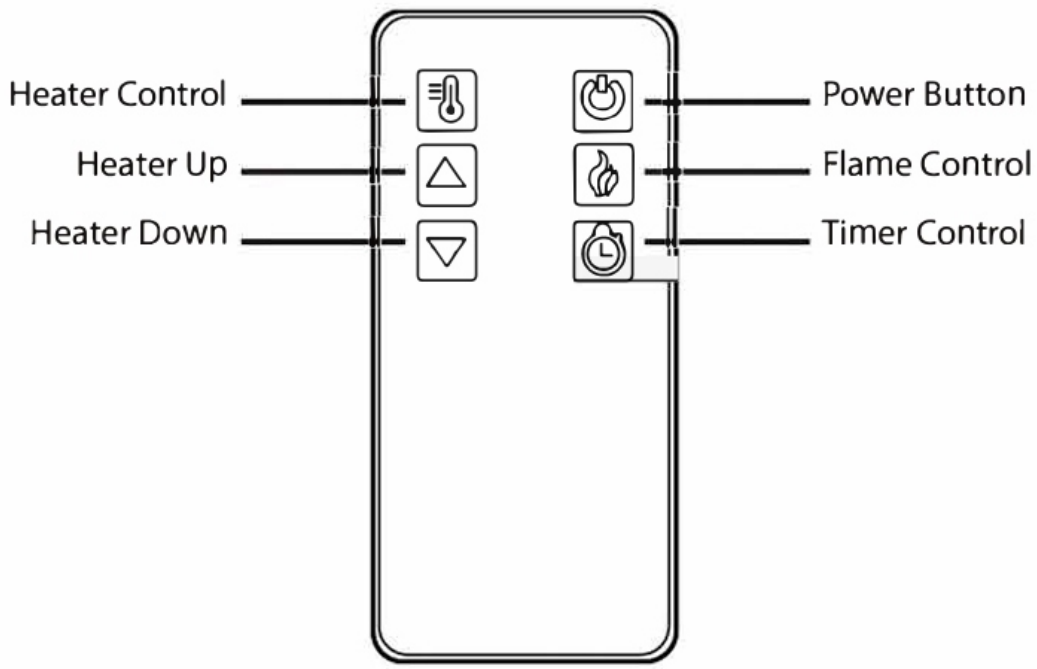

Remote Control

The operation of the remote control buttons work the same as the button on the control panel.

NOTE: The remote control cannot be used to switch between degree Fahrenheit and degree Celsius.

Install / Replace Battery

The remote control is provided with a Cr2025 battery. Remove the plastic insulating sheet before using.

To replace or remove old battery, push in the clip and pull the battery bracket out simultaneously.

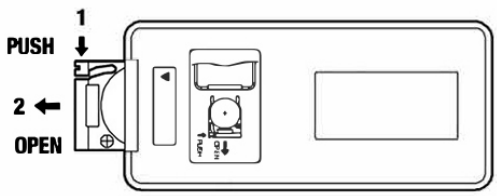

Insert a new battery with the button side into the bcket, make sure the battery is firmly seated.

To replace the bracket, simply push it into the remote control. Make sure the bracket snaps into position.

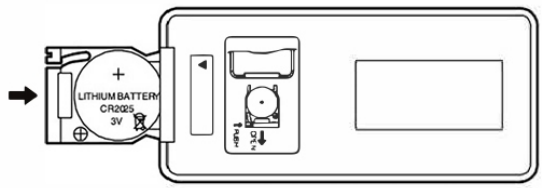

NOTE: Remove battery from remote control if not use for an extended period of time.

⚠ CAUTION / WARNING

- Dispose old/used battery at a suitable recycling point or according to local regulations.
- DO NOT ingest battery. If accidentally swallowed, seek for medical help immediately.

CARE AND MAINTENANCE

Cleaning the unit:

Always turn offand unplug the unit from power outlet before cleaning.

Allow the unit to cool down completely before performing any maintenance or cleaning.

Use a vacuum cleaner or duster to regularly remove any accumulated dust on the unit.

Use a damp soft cloth to clean the surface and buffwith a dry cloth.

Do not use abrasive cleansers, liquid sprays or any cleaner that could scratch the surface.

TROUBLE SHOOTING

Problem	Solution
The unit does not turn on	Make sure the unit is plugged into a standard 120V grounded power source. Press the power button on the control panel.
Flame effect is on, but there is no flame effect	Open the top and back panel to check if the flame spindle has fallen offfrom the spindle motor.
The heater does not blow warm air	Make sure the set temperature is higher than the room temperature.
The heater does not work	Turn all switches to OFF and unplug the unit for 5 minutes. Plug the unit back to power and operate as normal.
Error Code EE shown on the indicator	Please contact customer service
Remote control does not work	Keep the remote control closer to the unit / change battery/ remove insulating plastic sheet.

GARVEE

support@garvee.com