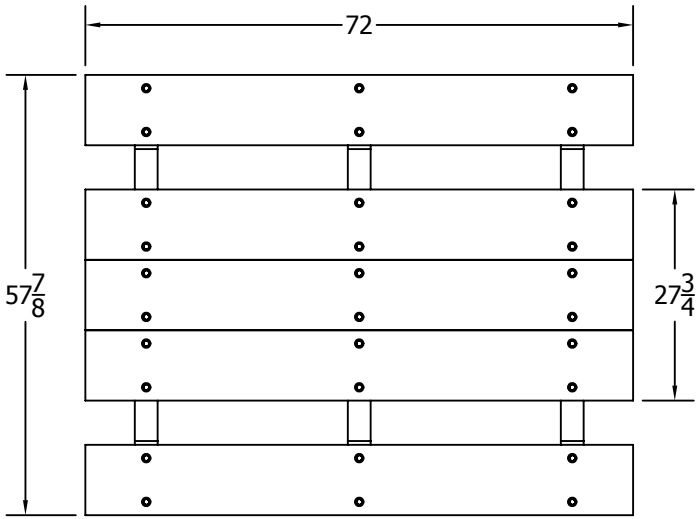

TOP VIEW

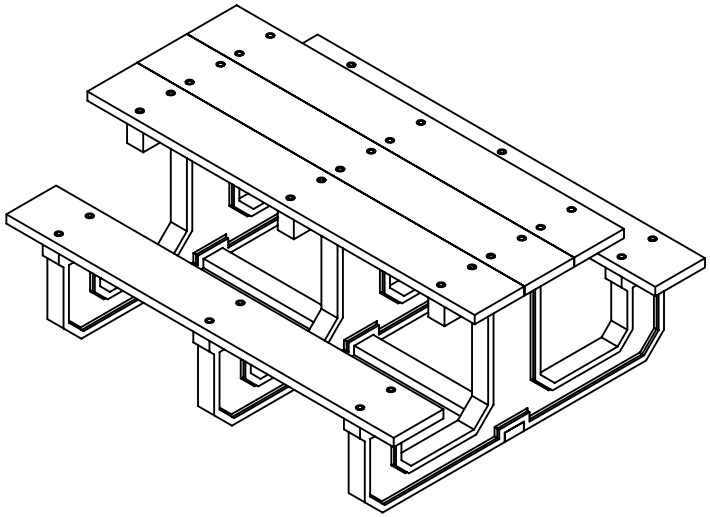

3D ISOMETRIC VIEW

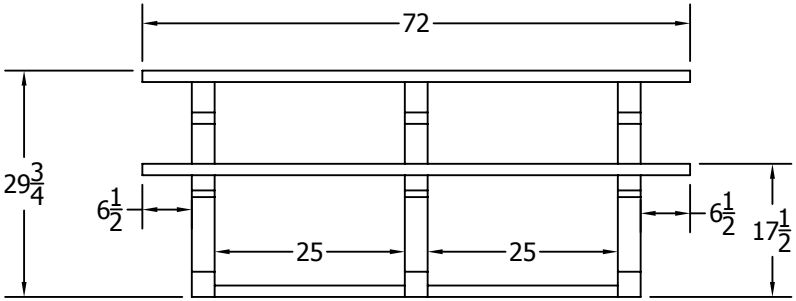

FRONT VIEW

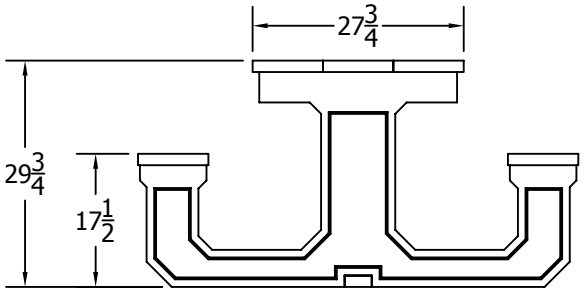

SIDE VIEW

BLU CED GRA GRE RED

STANDARD COLORS

BLA BRO WHI

OPTIONAL COLORS

INSERT COLOR CODE IN PRODUCT NUMBER
BLUE= BLU, CEDAR= CED, GRAY= GRA, GREEN= GRE,
RED= RED, BLACK= BLA, BROWN=BRO, WHITE=WHI

EXAMPLE: 6FT. CEDAR PARK PLACE PICNIC TABLE =
PB 6**CED**PARKP

6 Ft. Park Place Table Spec Sheet

©COPYRIGHT 2013-2033

THIS COPYRIGHTED MATERIAL IS THE PROPERTY OF FROG FURNISHINGS AND SHALL NOT BE REPRODUCED, PUBLISHED OR DISCLOSED TO OTHERS WITHOUT AUTHORIZATION AND CANNOT BE USED IN ANY WAY AGAINST OR DETRIMENTAL TO JAYHAWK PLASTICS INC. OLATHE, KANSAS USA

Frog Furnishings
15750 S. Keeler Terrace
Olathe, KS 66062
www.frogfurnishings.com

NOT TO SCALE
Date: 01/2019

Frog FURNISHINGS™