Assembly Instructions

Caution: You must read these Assembly Instructions before you proceed

Care & Maintenance

- Do not put hot items directly on furniture surface.
- Do not clean furniture with harsh cleansers or polish.
- To obtain the longest lifespan of your outdoor product minimizing exposure to direct sunlight is recommended.
- Children should not climb or jump on the furniture.
- Do not write on furniture without a padded barrier to protect the surface.
- To obtain the longest lifespan of your outdoor products, avoid extended and lengthy exposure to rain, snow, and direct sunshine. Whenever possible cover the product and /or place under patio or awnings.
- Not for commercial use. For residential use only.
- Stains may be removed with mild soap solution and damp cloth.
- Dust and pick-up spills using a clean, non-colored, lint- free cloth.

Please look in the Seat Panel for hardware packs.

OUTDOOR SOFA SET

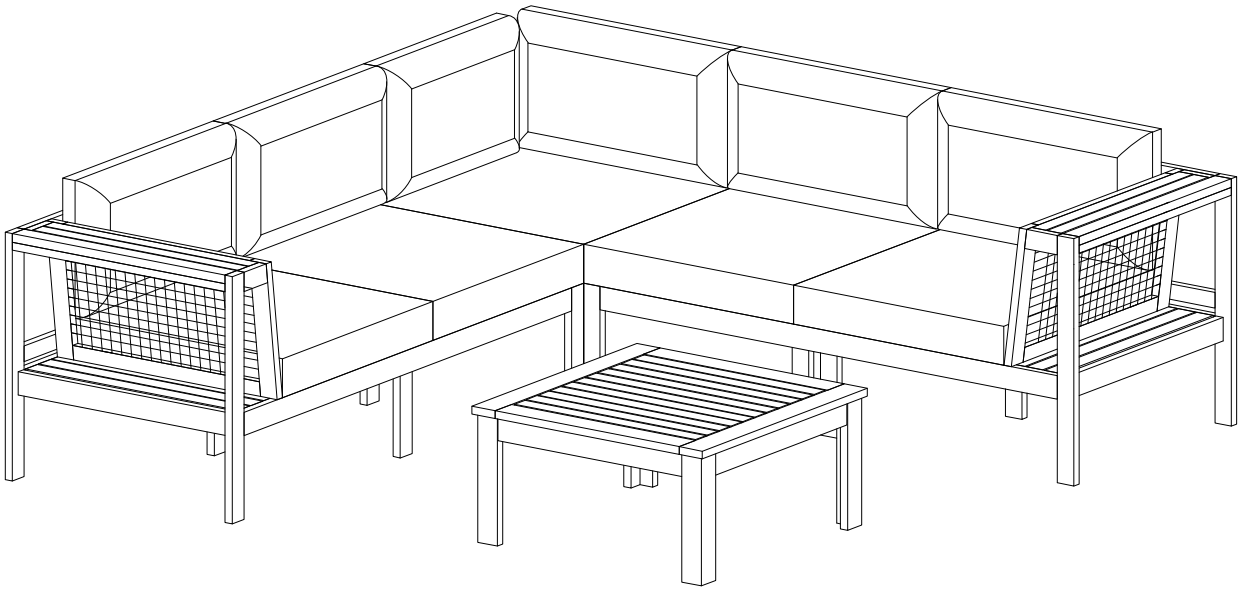

Caution: This Sofa is NOT a TOY.
Keep your child/children at bay during the assembly process.
Whenever lifting or moving the Sofa and to prevent damage to the Sofa, two adults may be needed to execute these actions.

Part List

Label	Picture	Description	Qty
A	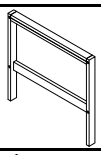	Left Arm Panel 1	1
B	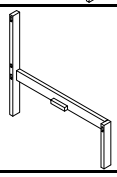	Right Leg Panel 1	1
C	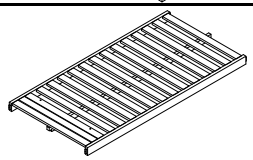	Seat Panel 1	1
D	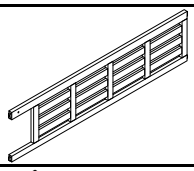	Backrest Panel 1	1
E	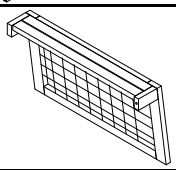	Hip Rest 1	1
F		Leg support	6
G	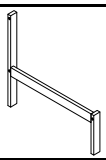	Left Leg Panel 2	1
H	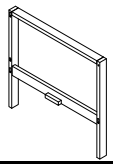	Right Arm Panel 2	1
I	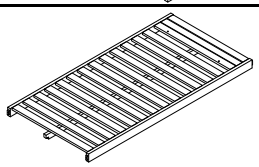	Seat Panel 2	1
J	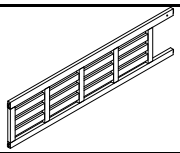	Backrest Panel 2	1
K	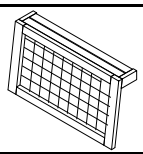	Hip Rest 2	1
L	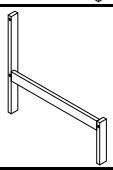	Left Leg Panel 3	1

Part List

Label	Picture	Description	Qty
M	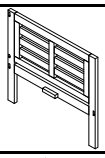	Right Leg Panel 3	1
N	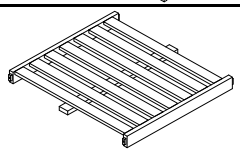	Seat Panel 3	1
O	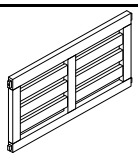	Backrest Panel 3	1
P	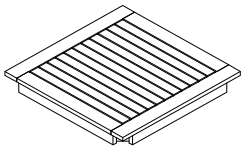	Table Top	1
Q	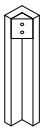	Leg	4
R	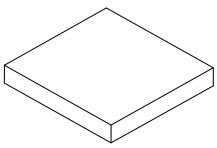	Seat Cushion 1	1
S	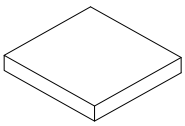	Seat Cushion 2	4
T	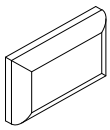	Back Cushion 1	1
U	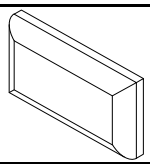	Back Cushion 2	5

Hardware

No.	Picture	Description	Qty
①		Screw (M6x40mm)	7
②		Screw (M7x60mm)	4
③		Screw (M7x70mm)	16
④		Bolt (M6x30mm)	13
⑤	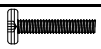	Bolt (M6x65mm)	3
⑥		Bolt (M8x50mm)	9
⑦		Washer (M8x20x2mm)	9
⑧		Allen Wrench	2

Assembly Preparation

Before Beginning Assembly:

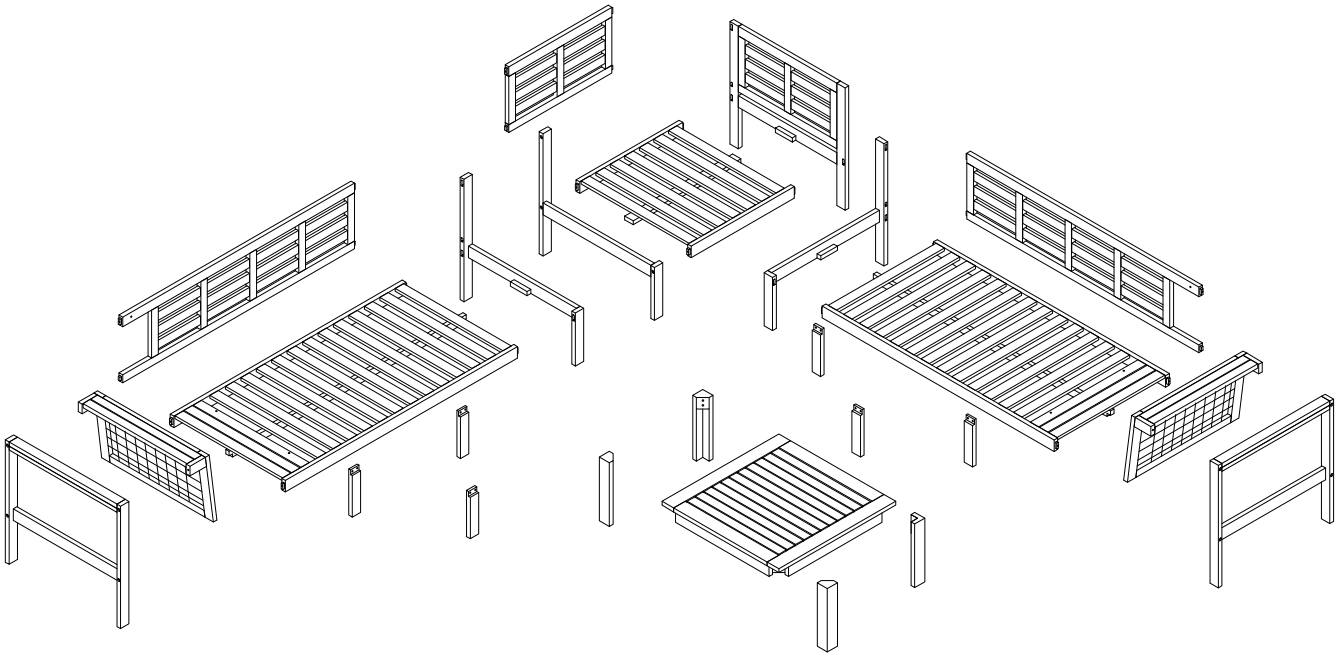

① x7
② x4
③ x16
④ x13
⑤ x3
⑥ x9
⑦ x9
⑧ x2

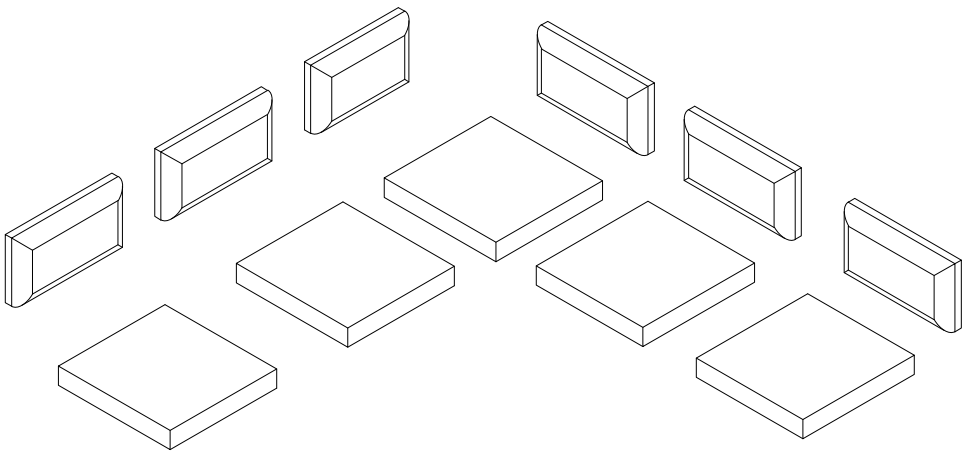

- Read instructions, cover to cover-
- Have 2 adults on hand for assembly-
- Do not assemble on flooring or carpet-
- Assemble on a clean non-marring surface (packing foam)-
- Save all packaging until finished-

Assembly Steps

Overview

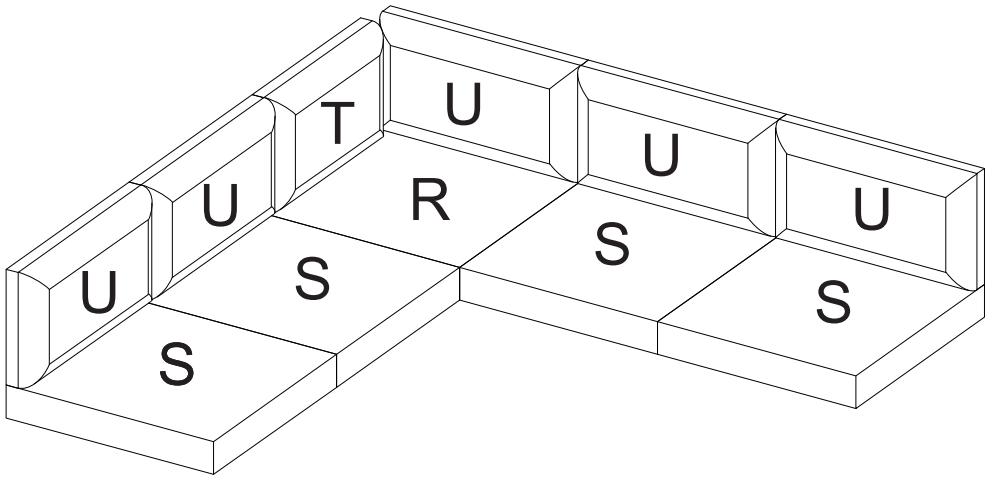

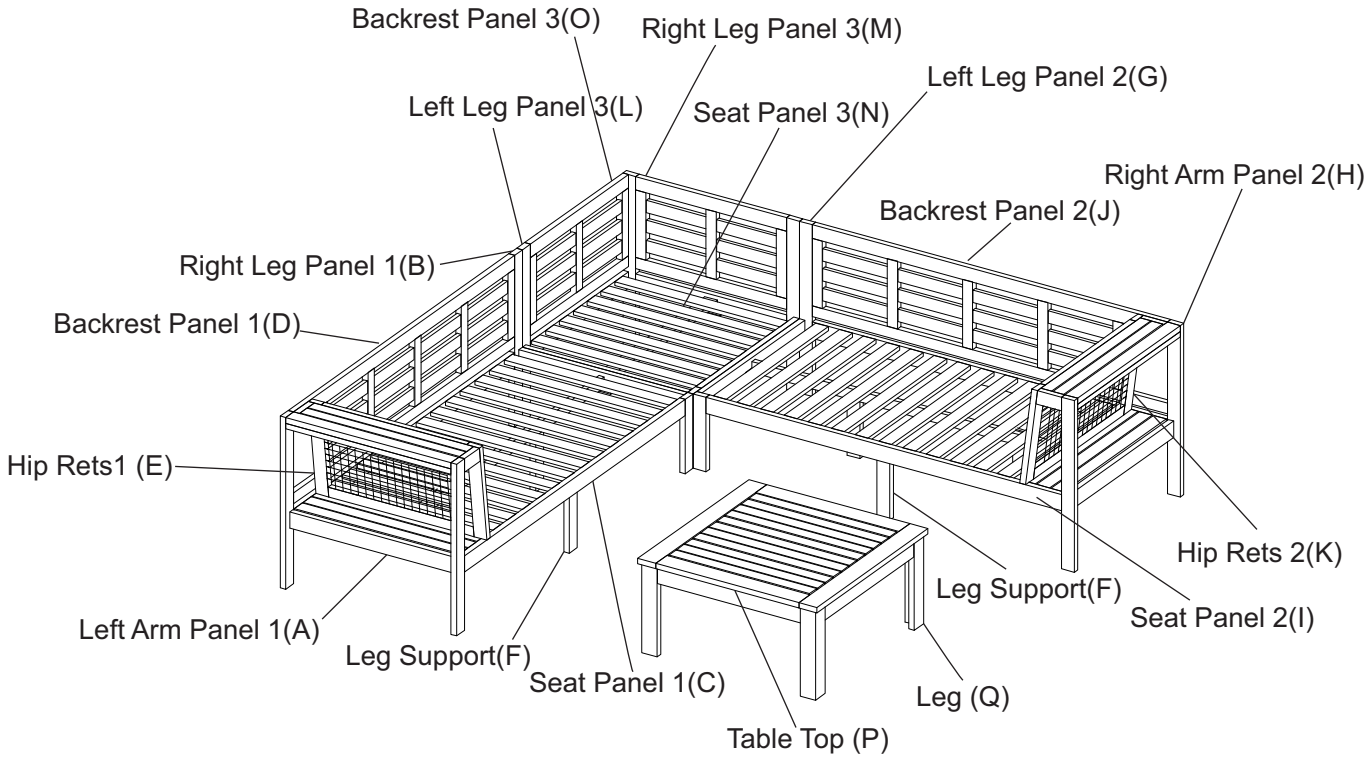

FRONT FACING

This Sofa has multiple parts and may require up to 30 minutes to assemble. To give you an overview of the Sofa parts, the above picture is to help you put the various parts into perspective. Please read through the instructions below to familiarise yourself with the parts and steps before assembly.

CARTON CONTENT:

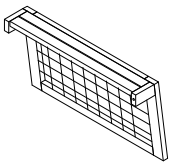
E x1

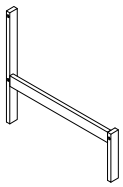
G x1

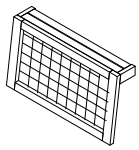
K x1

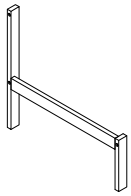
L x1

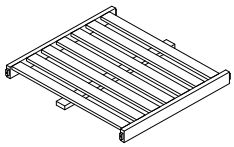
N x1

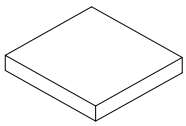
S x3

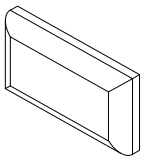
U x1

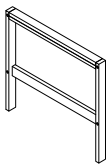
A x1

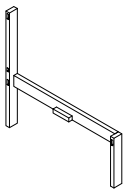
B x1

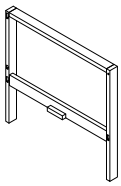
H x1

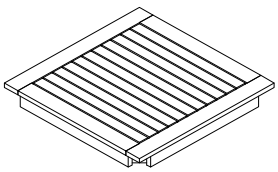
P x1

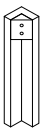
Q x4

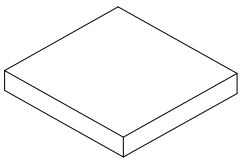
R x1

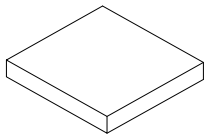
S x1

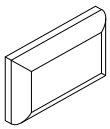
Tx1

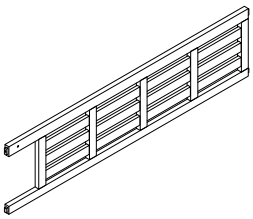
D x1

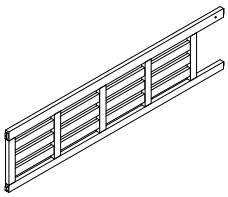
J x1

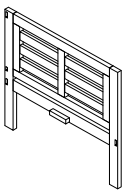
M x1

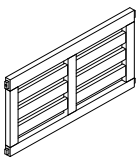
O x1

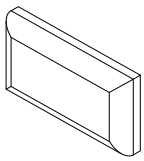
U x4

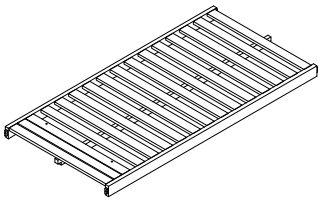
C x1

F x6

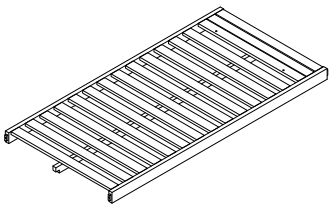
I x1

Step 1

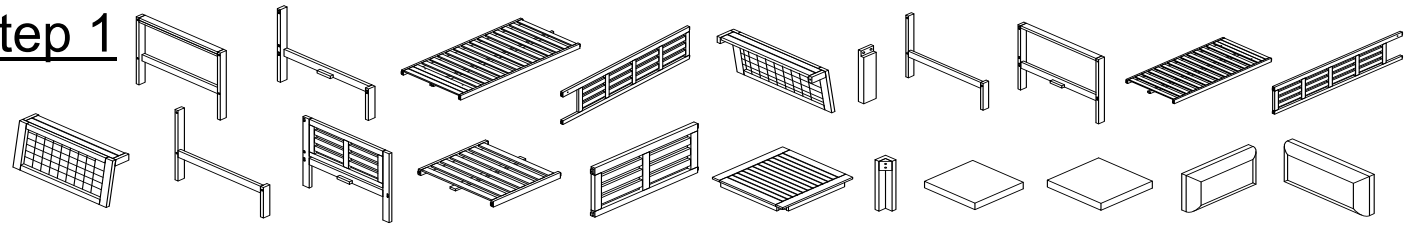

Unpack and place all parts on a clean, non-marring surface.

Step 2

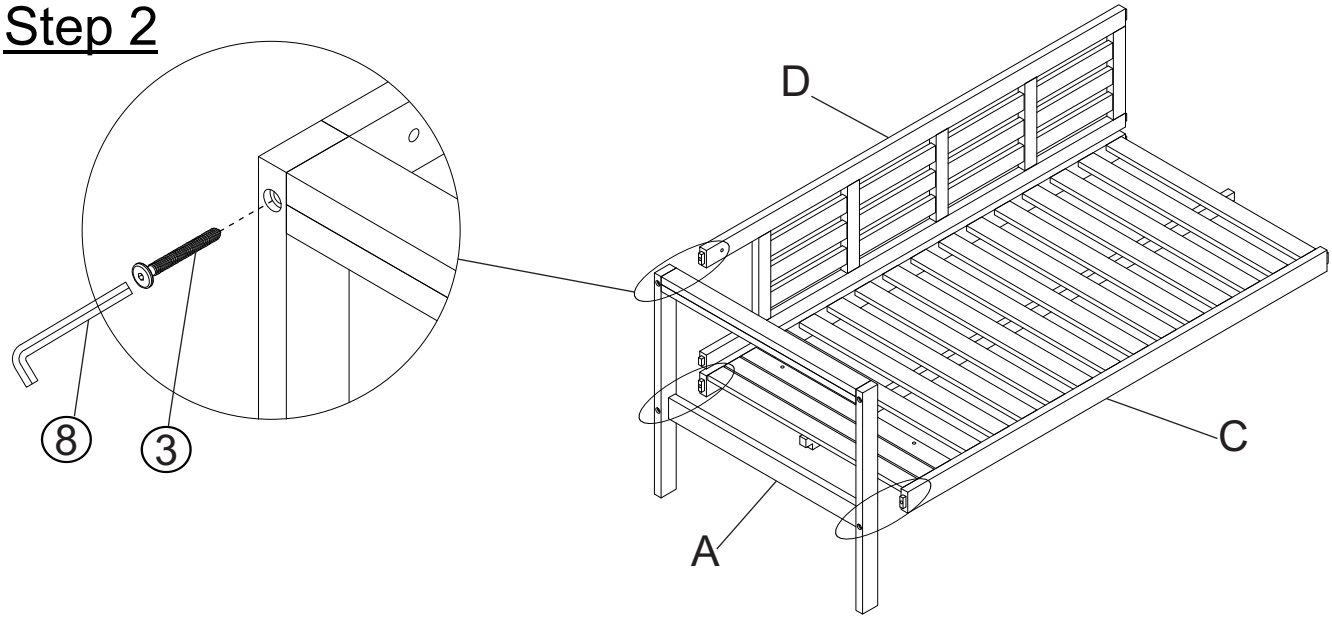

2.Insert the dowels of Seat Panel 1(C) and Backrest Panel 1(D) into the mountings in the Left Arm Panel 1 (A) using Screw (③) with Allen Wrench (⑧).

Do not fully tighten the Screw.

Step 3

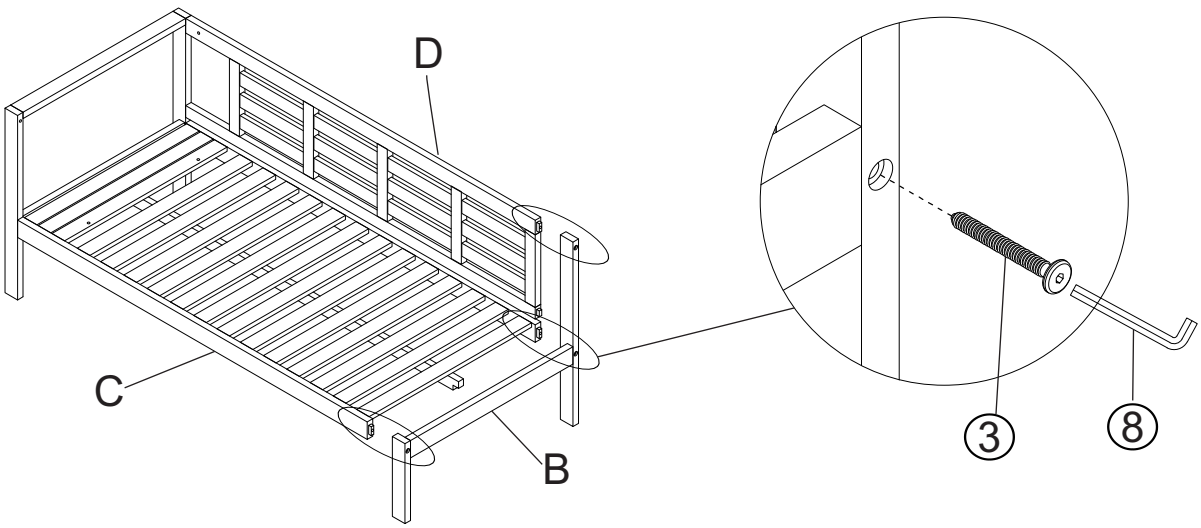

3.Insert the dowels of Seat Panel 1(C) and Backrest Panel 1(D) into the mountings in the Right Leg Panel 1 (B) using Screw (③) with Allen Wrench (⑧).

Do not fully tighten the Screw.

Step 4

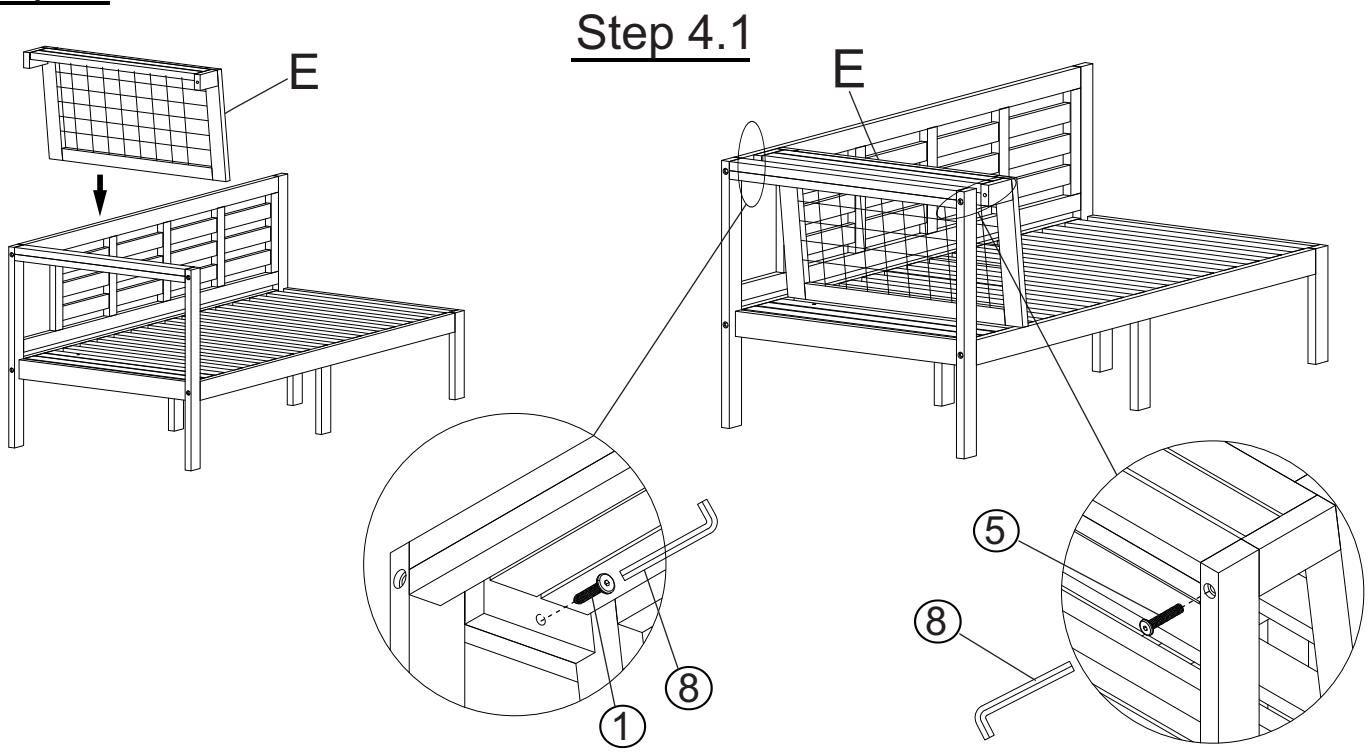

4. Place Hip Rest 1 (E) onto the Sofa

4.1 Attach Hip Rest 1 (E) to the Sofa using Bolt (5) and Screw (1)and Allen Wrench (8)

Do not fully tighten the Screw and Bolts.

Step 5

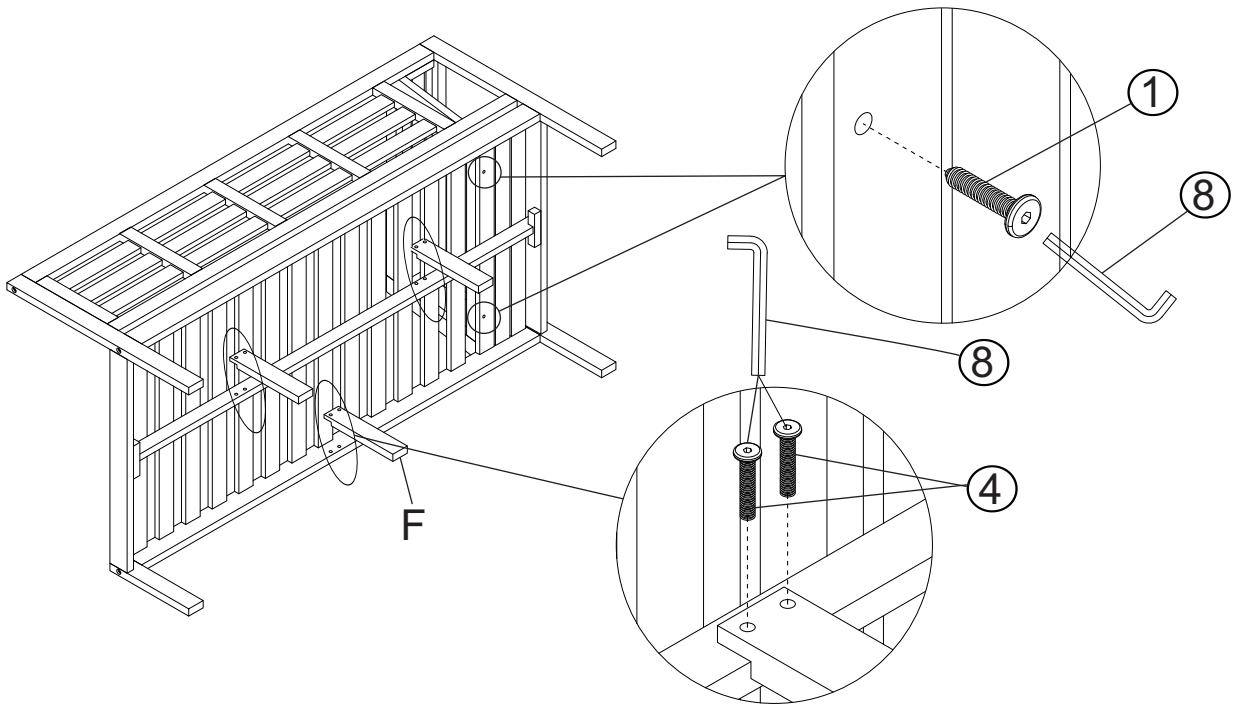

5.With the help of the installer, tilt the sofa forward at a 90 degree angle and proceed to install the Leg Support (F) using Bolts (4) and fix the panel Hip Rest 1(E) using Screw (1)and Allen Wrench (8).

Do not fully tighten the Bolts and Screw.

Step 6

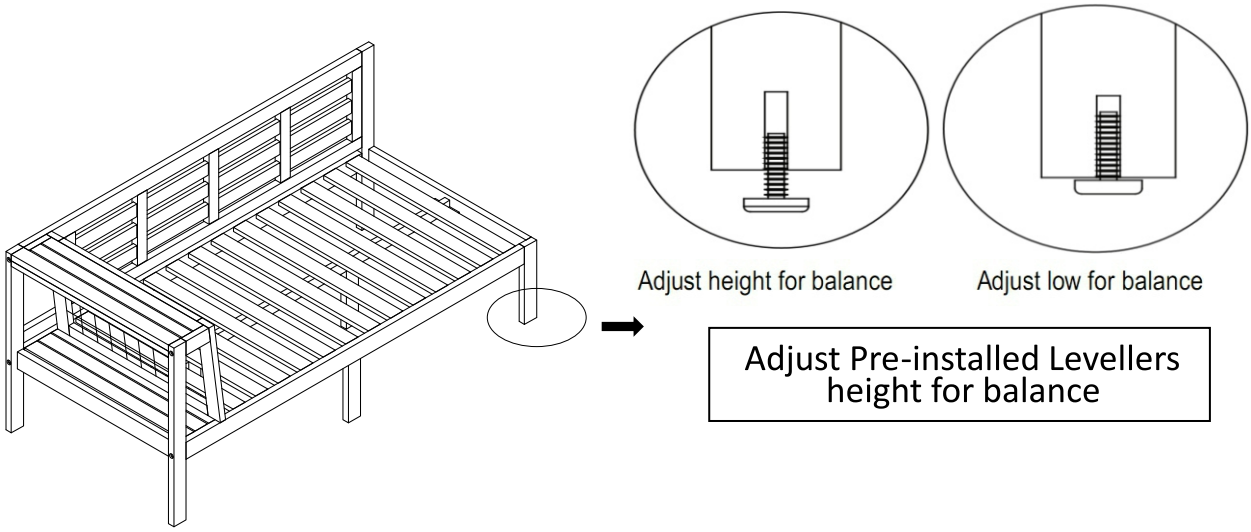

Inspect the Sofa and make sure all parts are adequately connected.
Then EXERT pressure, floorwards onto the chair with both hand
This pressure will help align all parts at all joints.
In a sequential manner, tighten all Bolts and Screws at all joints.
Adjust the Levellers until the Sofa is level with the ground.
To adjust the Levellers, get assistance from an adult partner to lift/lean and hold the Sofa while you are working.

Step 7

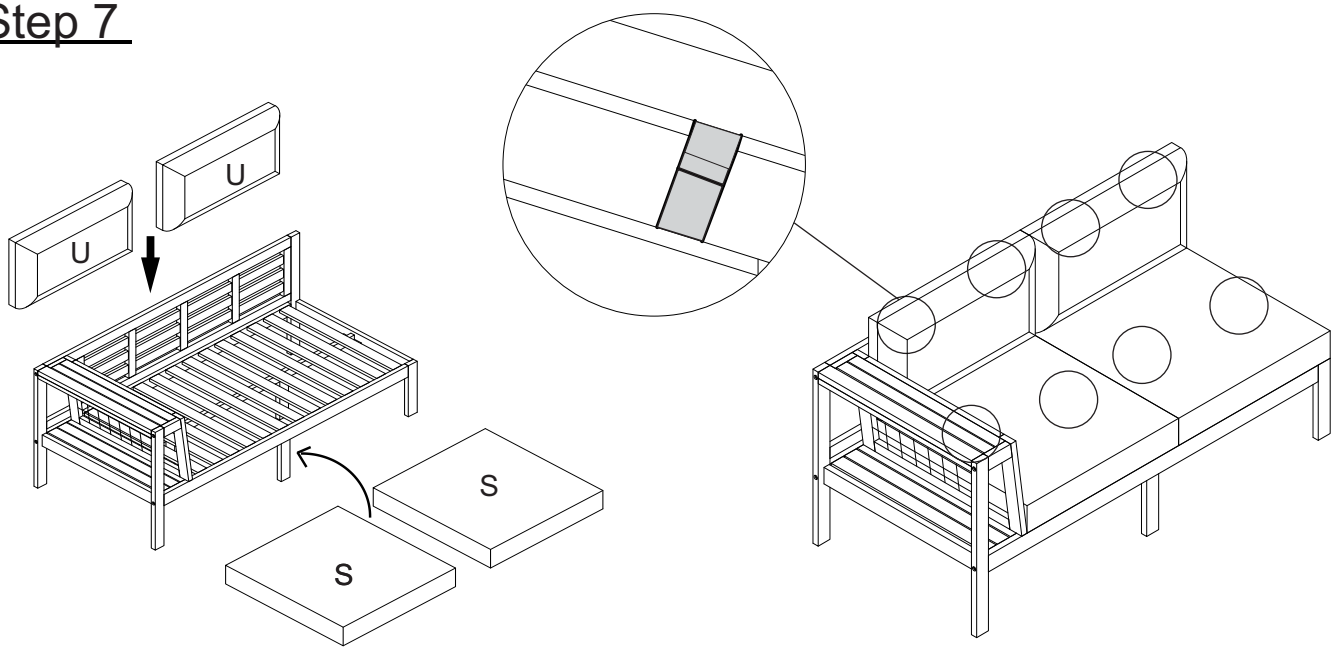

7. Place Seat Cushion (S),and Back Cushion (U) onto the Sofa , and affix the magic tape straps around the Sofa as shown above.

This sofa can only be used on a flat, level surface.

Step 8

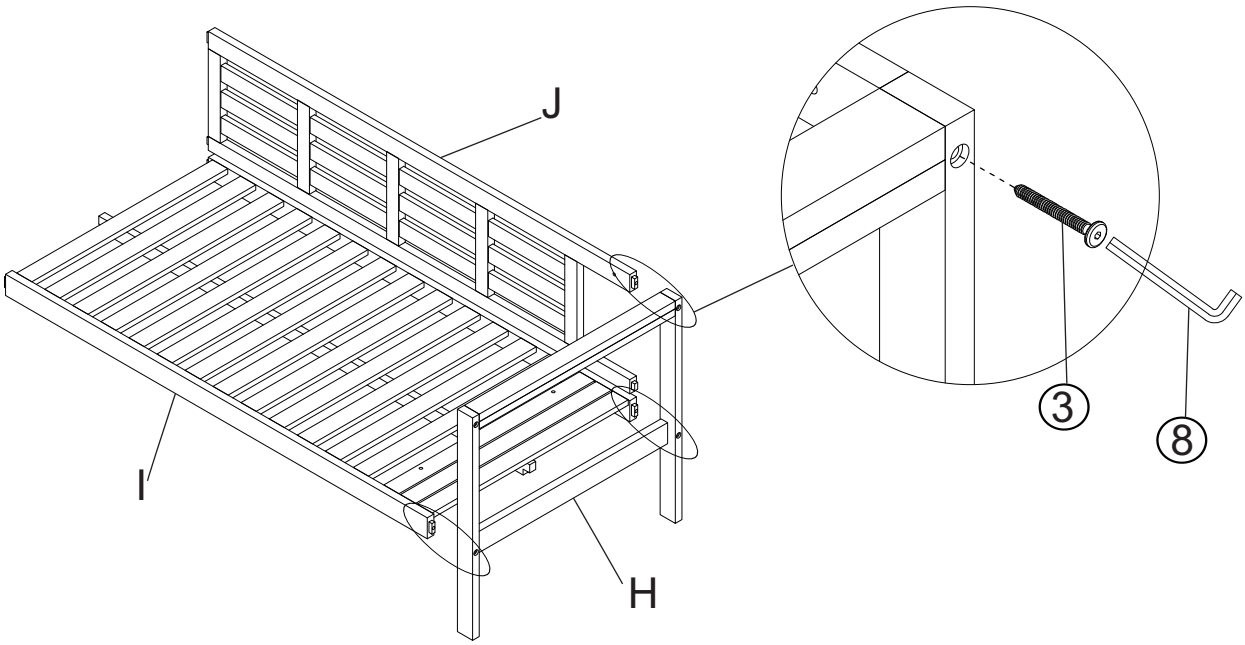

8.Insert the dowels of Seat Panel 2 (I) and Backrest Panel 2 (J) into the mountings in the Right Arm Panel (H) using Screw (③) with Allen Wrench (⑧).

Do not fully tighten the Screw.

Step 9

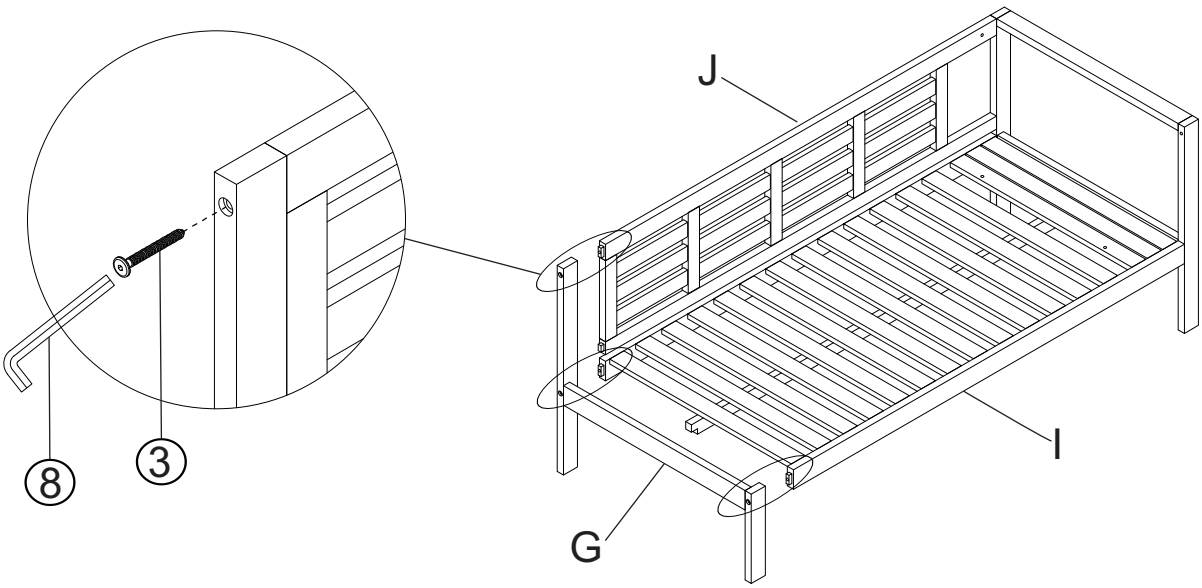

9.Insert the dowels of Seat Panel 2 (I) and Backrest Panel 2 (J) into the mountings in the Left Leg Panel (G) using Screw (③) with Allen Wrench (⑧).

Do not fully tighten the Screw.

Step 10

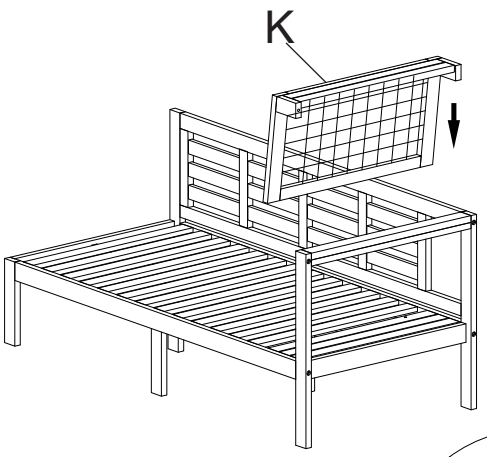

Step 10.1

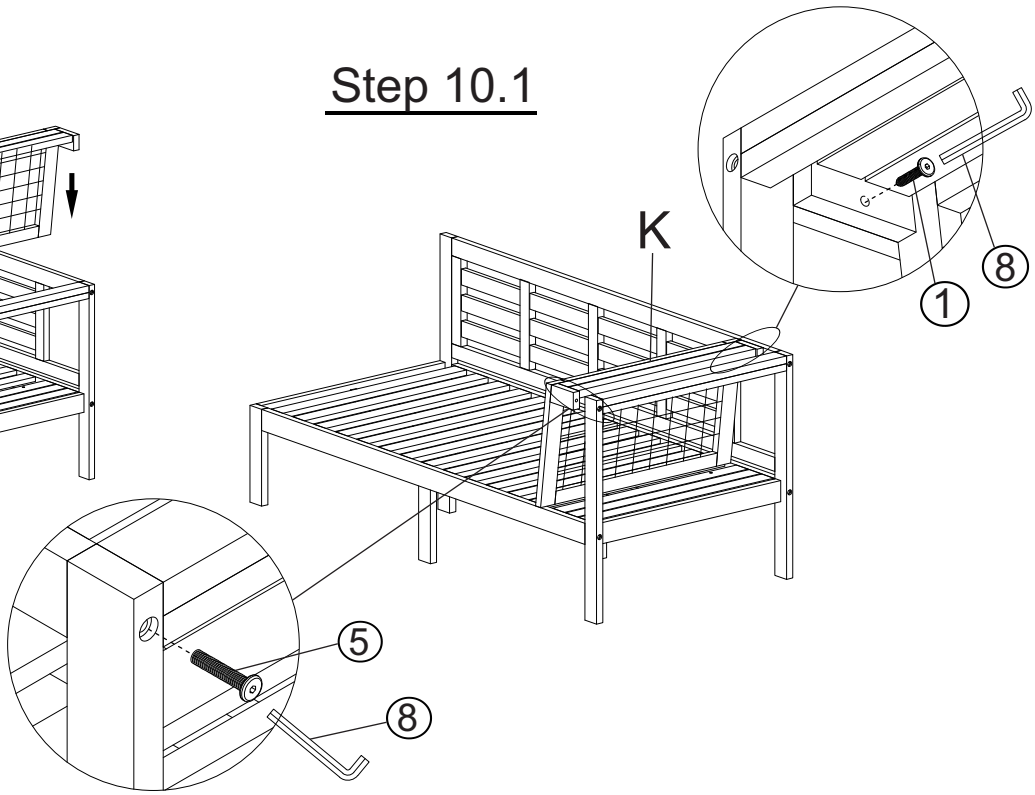

10. Place Hip Rest 2 (K) onto the Sofa

10.1. Attach Hip Rest 2 (K) to the Sofa using Bolt (5) and Screw (1) and Allen Wrench (8)

Do not fully tighten the Screw and Bolts.

Step 11

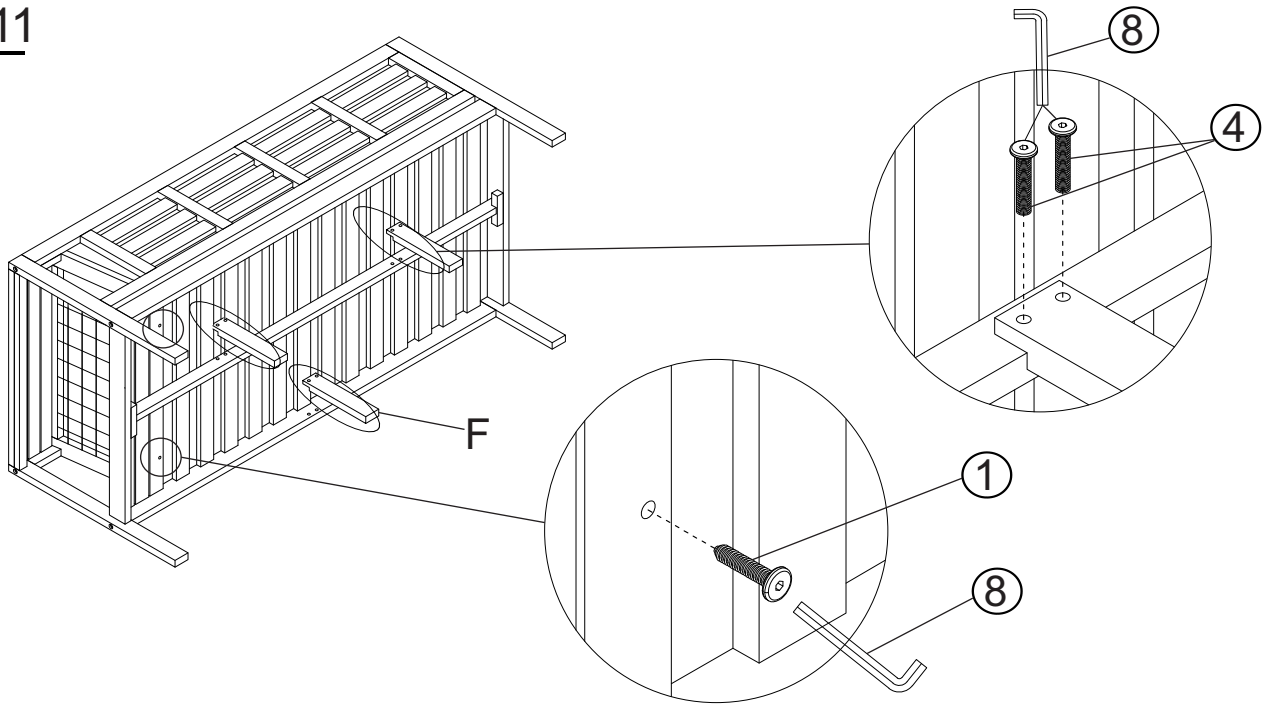

11. With the help of the installer, tilt the sofa forward at a 90 degree angle and proceed to install the Leg Support (F) using Bolt (4) and fix the panel Hip Rest 1(K) using Screw (1)and Allen Wrench (8).

Do not fully tighten the Bolts and Screw.

Step 12

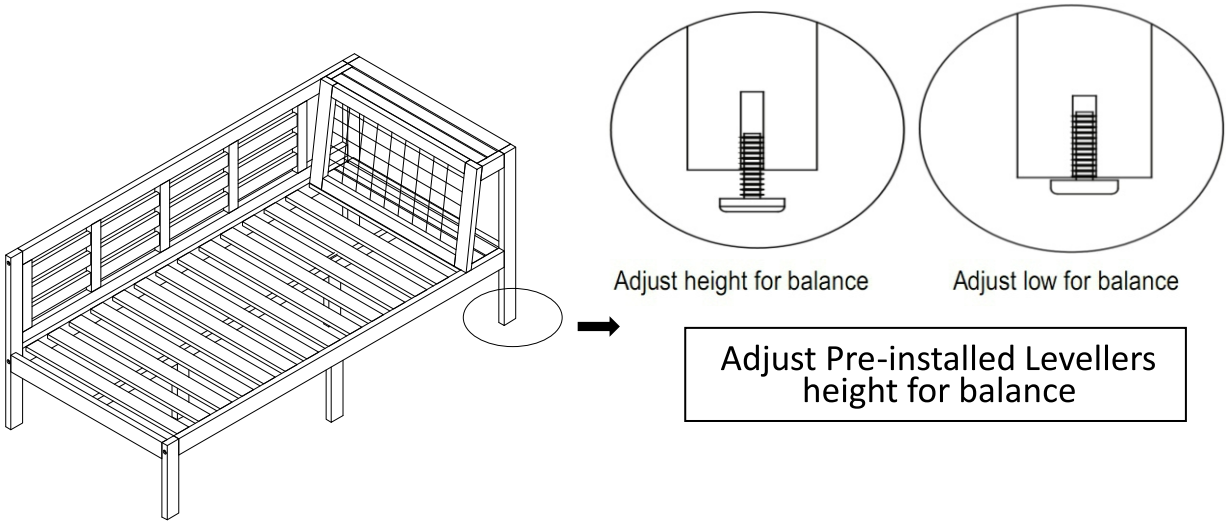

Inspect the Sofa and make sure all parts are adequately connected.
Then EXERT pressure, floorwards onto the chair with both hand
This pressure will help align all parts at all joints.
In a sequential manner, tighten all Bolts and Screws at all joints.
Adjust the Levellers until the Sofa is level with the ground.
To adjust the Levellers, get assistance from an adult partner to lift/lean and hold the Sofa while you are working.

Step 13

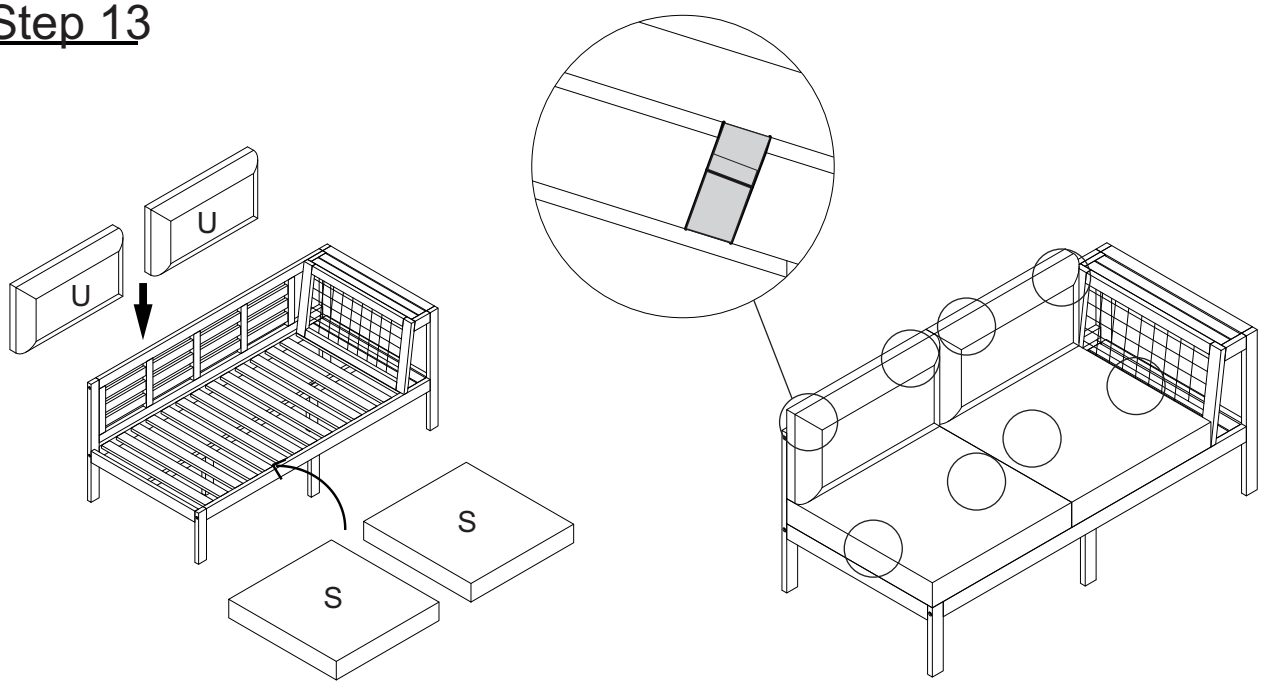

13. Place Seat Cushion (S),and Back Cushion (U) onto the Sofa , and affix the magic tape straps around the Sofa as shown above.

This sofa can only be used on a flat, level surface.

Step 14

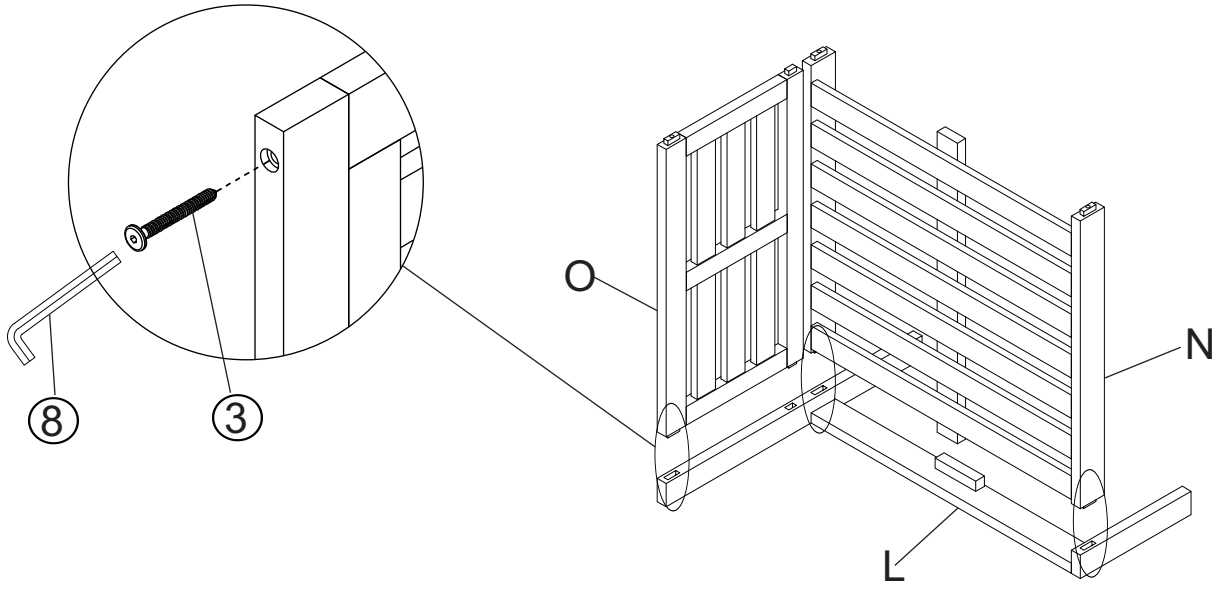

14. Insert the dowels of Backrest Panel 3 (O) and Seat Panel 3 (N) into the mountings in the Left Leg Panel 3 (L) using Screw (③) with Allen Wrench (⑧).

Do not fully tighten the Screw.

Step 15

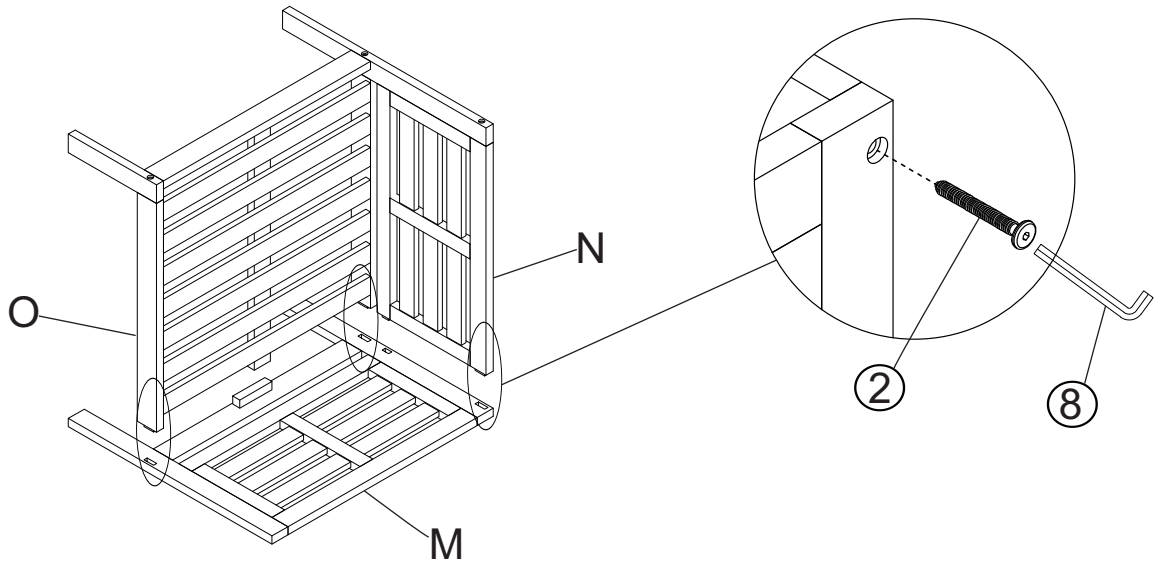

15. Insert the dowels of Backrest Panel 3 (O) and Seat Panel 3 (N) into the mountings in the Right Leg Panel 3 (M) using Screw (②) with Allen Wrench (⑧).

Do not fully tighten the Screw.

Step 16

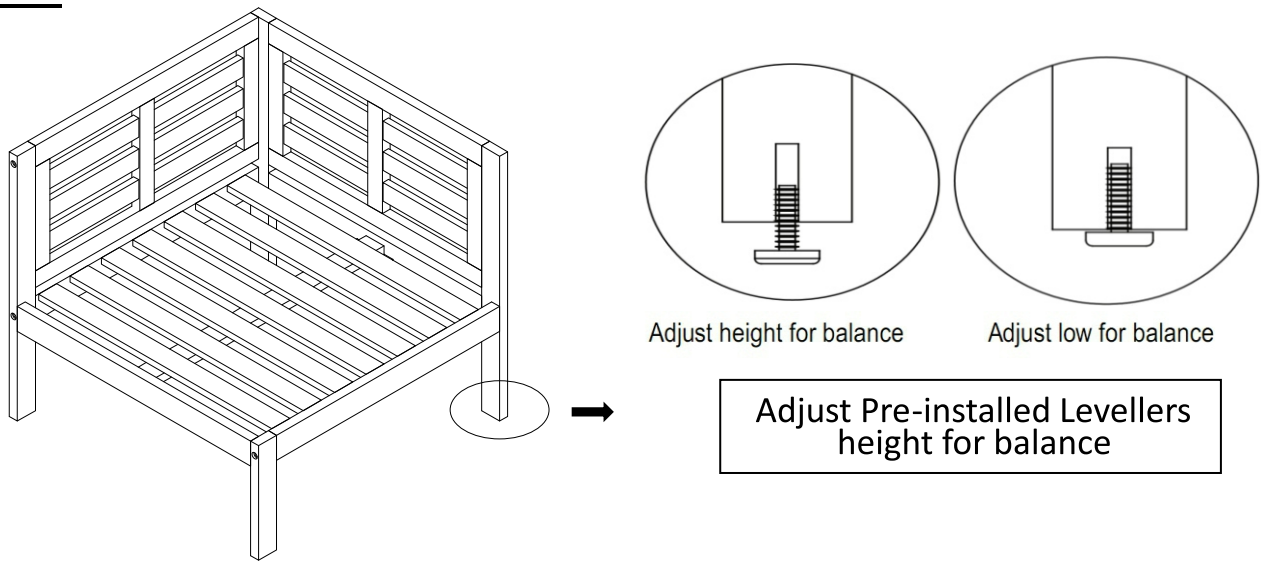

Inspect the Sofa and make sure all parts are adequately connected.
Then EXERT pressure, floorwards onto the chair with both hand
This pressure will help align all parts at all joints.
In a sequential manner, tighten all Bolts and Screws at all joints.
Adjust the Levellers until the Sofa is level with the ground.
To adjust the Levellers, get assistance from an adult partner to lift/lean and hold the Sofa while you are working.

Step 17

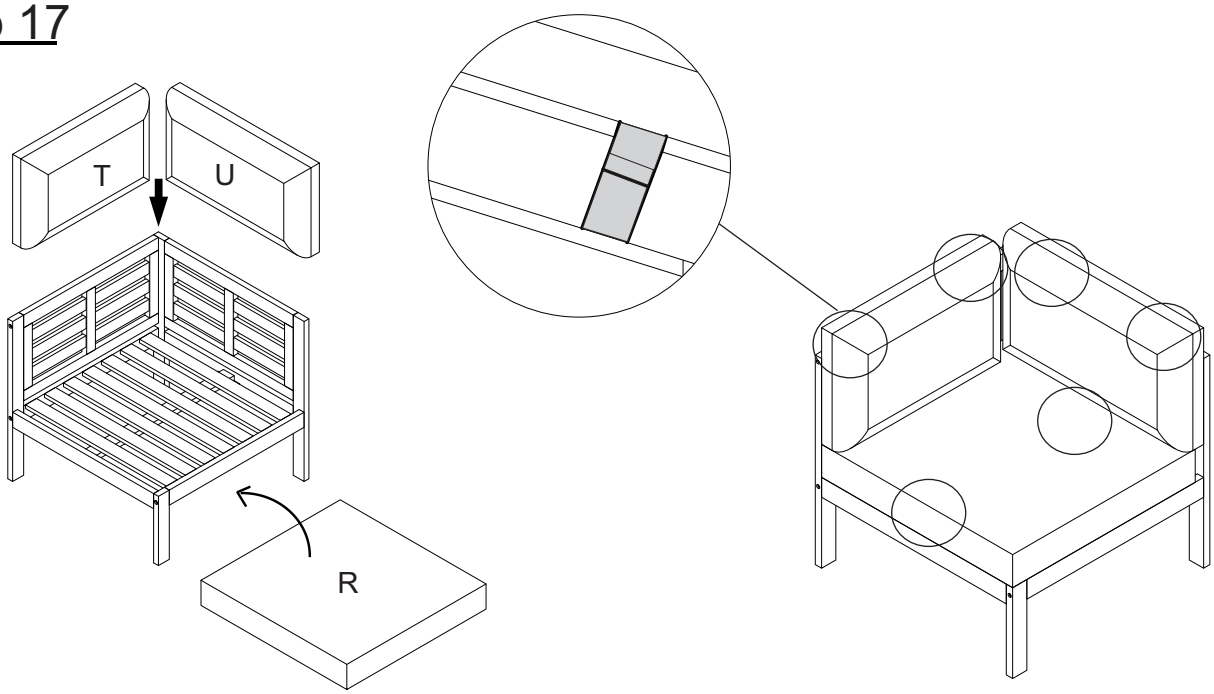

17. Place Seat Cushion (R),and Back Cushion (U)(T)onto the Sofa , and affix the magic tape straps around the Sofa as shown above.

This sofa can only be used on a flat, level surface.

Step 18

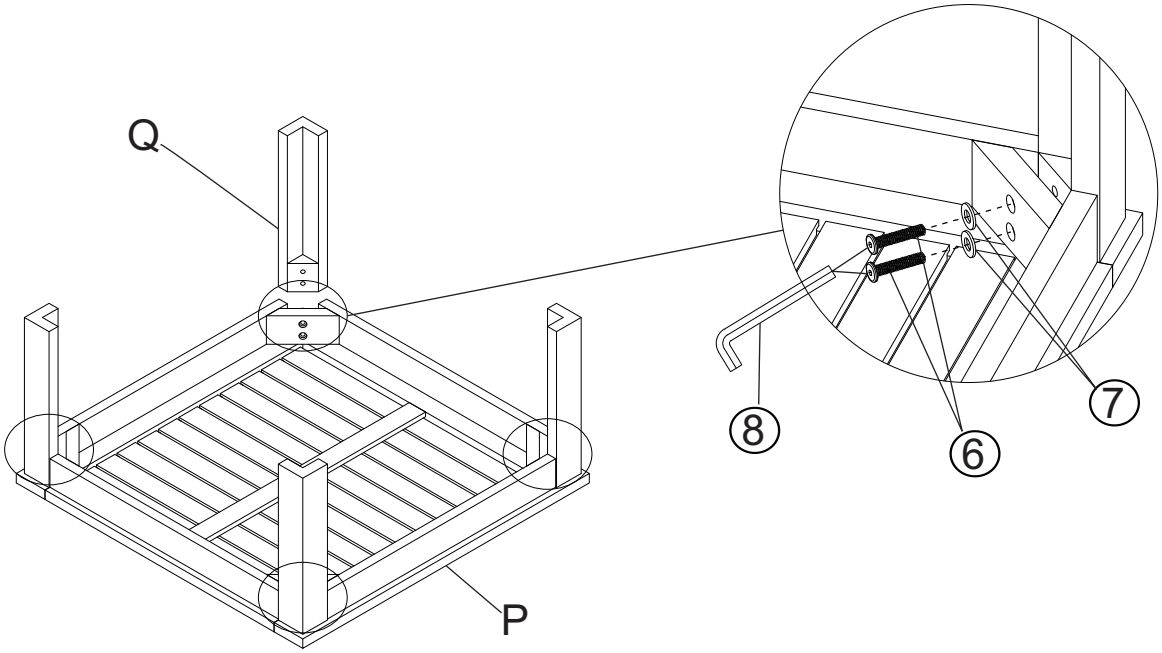

Place the Table Top (P) facedown onto a clean , non-marring surface.
18. Insert the dowels of Table Top (P) into the mountings in the Leg (Q) using Bolt (⑥), Washer (⑦) with Allen Wrench (⑧).

Do not fully tighten the Bolts.

Step 19

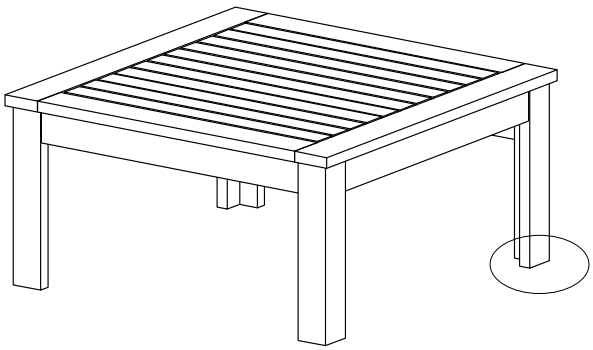

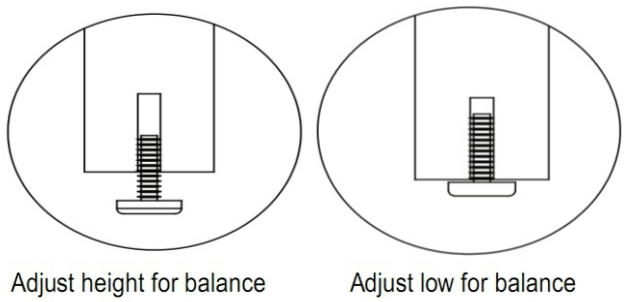

➡ Adjust Pre-installed Levellers height for balance

Inspect the Sofa and make sure all parts are adequately connected.
Then EXERT pressure, floorwards onto the chair with both hand
This pressure will help align all parts at all joints.
In a sequential manner, tighten all Bolts and Screws at all joints.
Adjust the Levellers until the Sofa is level with the ground.
To adjust the Levellers, get assistance from an adult partner to lift/lean and hold the Sofa while you are working.
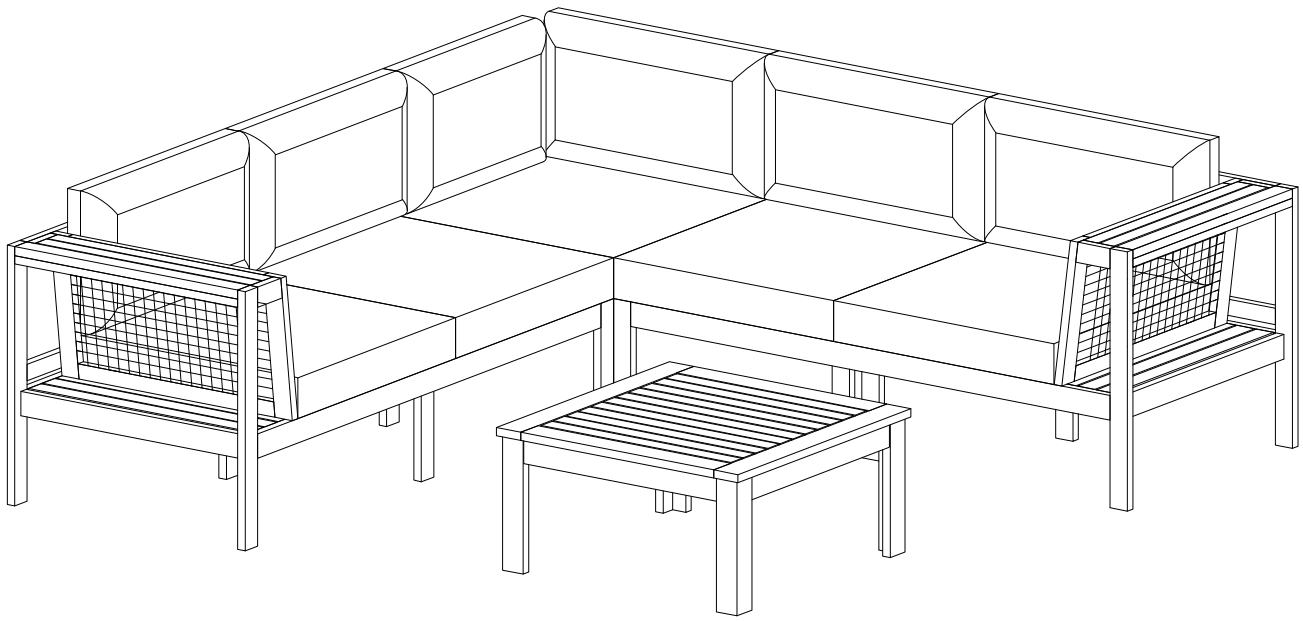
Step 20