MANUAL INSTRUCTION

TV Stand

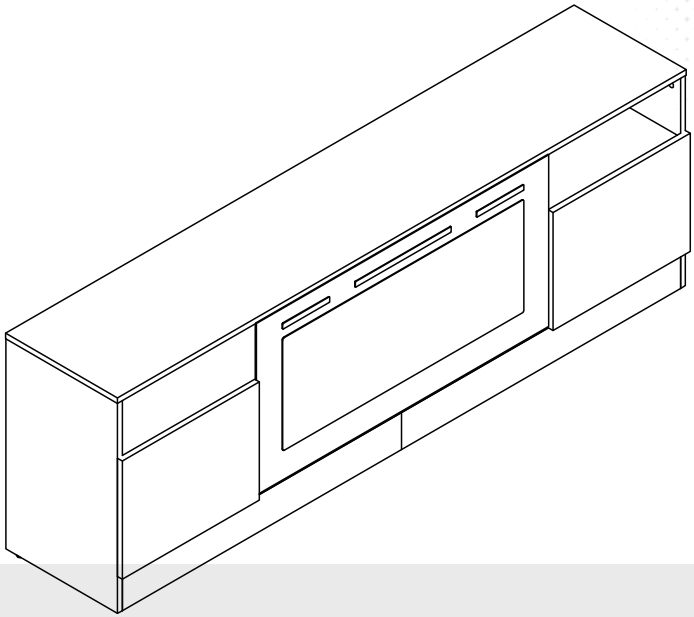

TV Stand

We offer a diverse range of products to meet the needs of customers.

Outdoor Furniture

We are a professional furniture provider with top-notch factories and outstanding designs, Our mission is to provide consumers with new lifestyles. By collecting consumer feedback, we constantly improve our products and create more choices for consumers.
If you want to create your space, We are an ideal choice.

Always.

WARNING

All the TV Stands have passed strict quality inspections before delivery . Read this manual carefully to ensure proper usage

Ensure that all parts and hardware are available before beginning assembly

NOTICE

1. Children are not allowed to operate.
2. Faster installation is possible with power tools.
3. Do not pull the door vigorously to prevent the storage cabinet from tipping over.
4. Please attach the storage cabinet to the wall with an anti-tip device after installation is complete.
5. When using the storage cabinet for the first time, please keep it in a ventilated environment to allow the smell to fully evaporate.
6. When placing the partitions, please make sure the nails are firmly installed to prevent the partitions from falling off.
7. If any parts are missing, broken, damaged or worn, discontinue use of the product until repairs are made and/or factory replacement parts are installed.
8. Do not use this product in a manner inconsistent with the manufacturer's instructions, as this may void the product warranty.
9. If accessories are missing, please contact customer service for communication in time, we provide 7x24 hours customer care.
10. Do not use any attachments or accessories other than the original factory attachments and accessories.
11. Do not alter this equipment. Any alteration will create a safety hazard.

WARNING

The product must be assembled by adult before use. Serious or fatal injury may occur from unexpected assembly or use.

1. During the assembly process, keep all parts away from babies or children.
2. Always securely fix this product to the wall. Make sure the wall area to be drilled is free from hidden electrical wires, water and gas pipes.
3. Use of tip-over restraints may only reduce, but not eliminate the risk of tip-over.
4. Unless specially designed to accommodate, do not set heavy objects on top of this product.
5. Place the heaviest items on the lowest shelf.
6. Never allow children to climb or bang on drawers, doors or shelves.

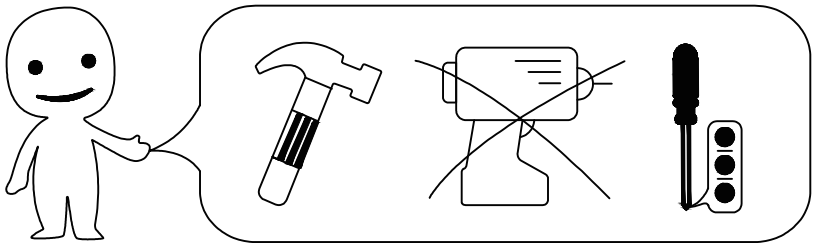

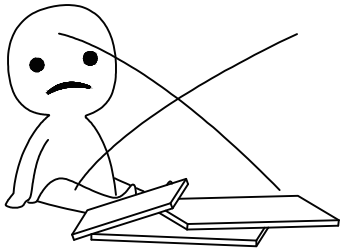

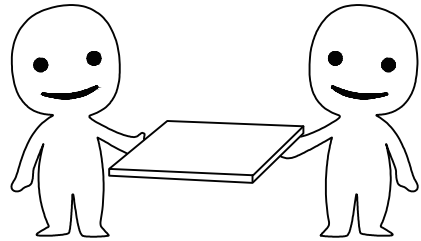

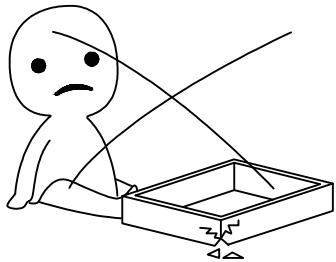

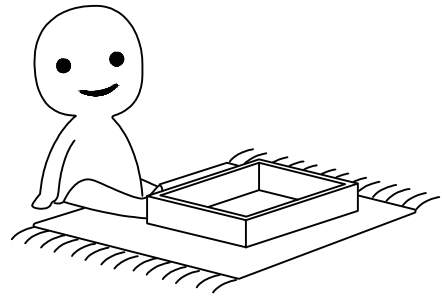

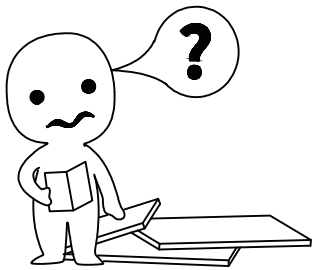

DE
Wichtige Information
- Sorgfaltig und aufmerksam lesen
- Diese Information aufbewahren
GB
Safety information
- Important information
- Please read closely and carefully
- Save this information

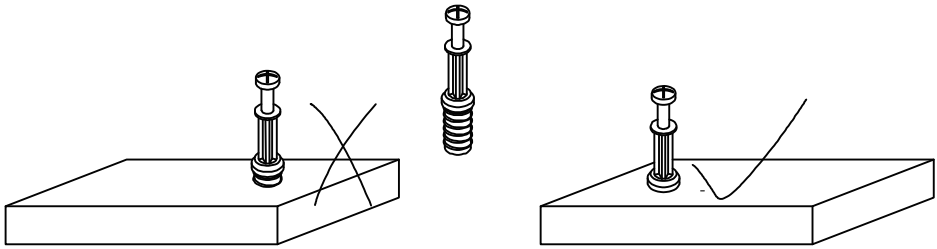

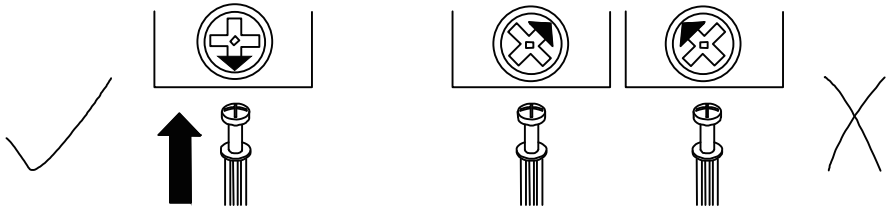

Nut should be in the centred of the cam lock when the two panels are joined.
Cam lock should be inserted before nut.

Wenn die beiden Platten verbunden sind, sollte die Mutter in der Mitte des Nockenschlosses sein.

Die Nockenverriegelung solte vor der Mutter eingefuhrt werden.

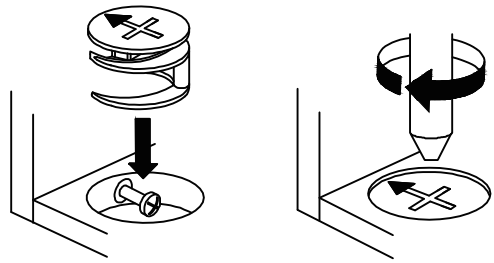

TOOLS REQUIRED

PHILLIPS SCREWDRIVER

2Persons Assembly

Minimum 30 Minutes For Assembly

PARTS

1 1PCS

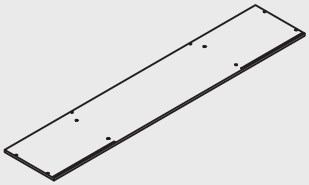

2 1PCS

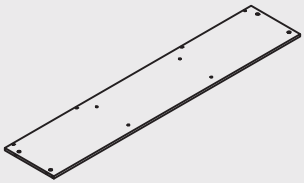

3 1PCS

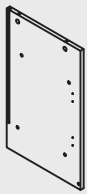

4 1PCS

5 1PCS

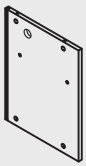

6 1PCS

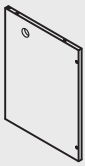

7 2PC S

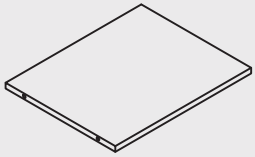

8 2PC S

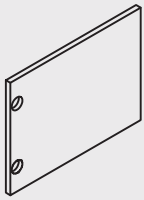

9 1PCS

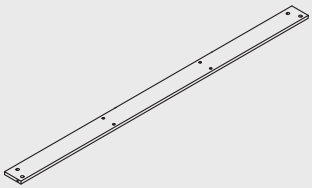

SPECIFICATION AND DIMENSION

10 2PC S

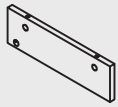

11 2PC S

12 2PC S

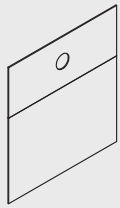

HARDWARE

A 12+2 PCS

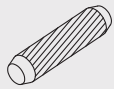

Φ 8x40mm

B 34+2PC S

Φ 12x12mm

C 34+2PC S

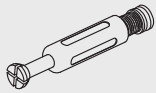

Φ 6x40mm

D 2PC S

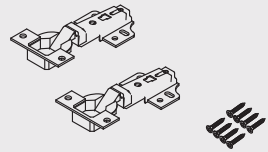

PRODUCT ASSEMBLY TV Stand

NOTE: Dear customer, if you purchase a TV stand & fireplace set, the package for the fireplace and the package for the TV stand will be delivered separately. If you purchase only the TV stand, the fireplace is not included.

1 Install 2 cam bolt “C" on the corresponding holes of the part⑨

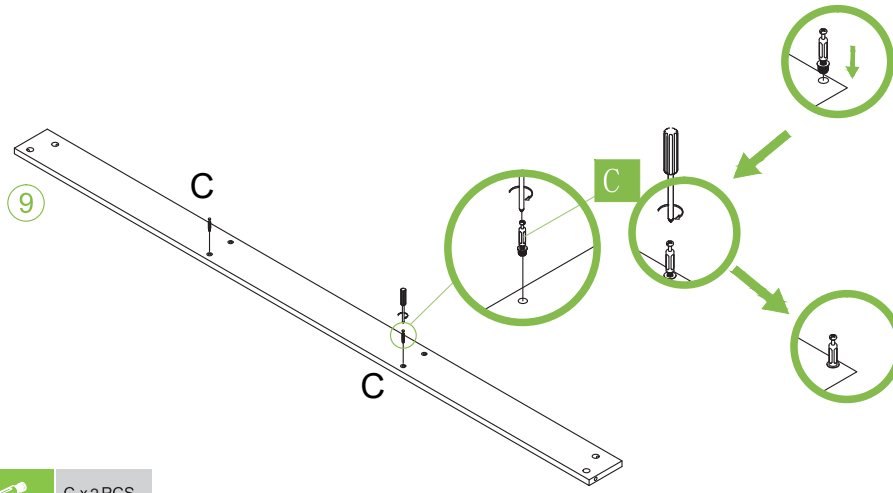

	C x 2 PCS

2 Use 2 wooden dowel "A" connect part⑨ and part ⑩.

Use 2 cam lock “B" to connect part ⑩ to part⑨, and turn the screw clockwise;

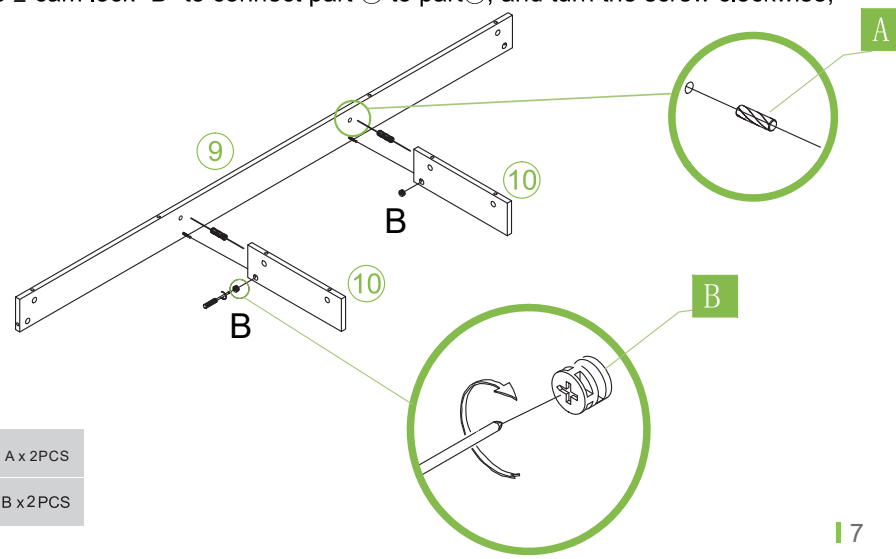

	A x 2 PCS
	B x 2 PCS

PRODUCT ASSEMBLY

3 Install 10 cam bolt “C" on the corresponding holes of the part②

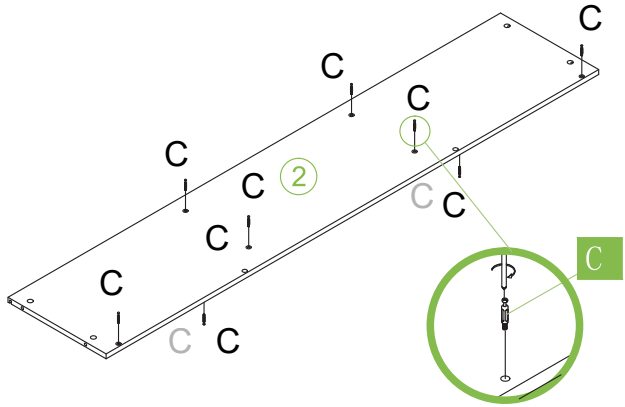

C x 10PCS

4

1. Put the side with the 6 cam bolt “C”(installed in the part②) facing up;
2. Use 2 cam lock “B" to connect 2 of part⑨ and part② respectively, turn the screw clockwise.
3. Use 4 cam lock “B" to connect 2 of part ⑩and part② respectively, turn the screw clockwise.

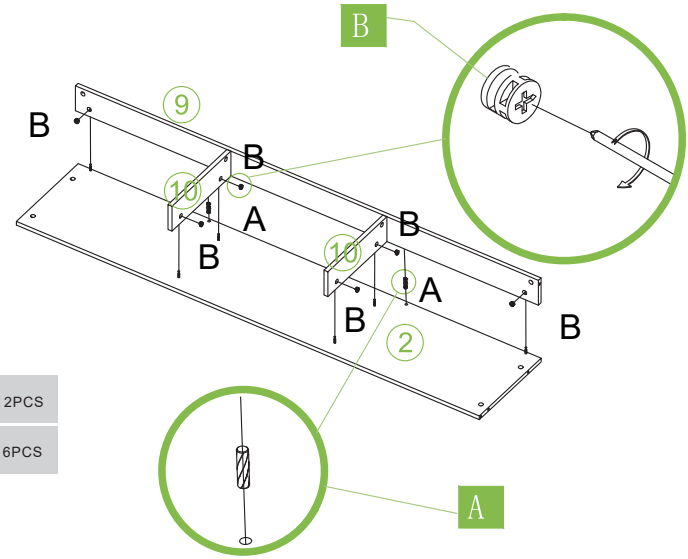

A x 2PCS

B x 6PCS

PRODUCT ASSEMBLY

5

1. Install 2 cam bolt “C” on the corresponding holes of part ⑤, and also install 2 cam bolt“C”on the corresponding holes of part ⑥;
2. Use 2 wooden dowel“A” connect part⑥ and part⑪, and Use 2 wooden dowel“A” connect part⑤ and part⑪

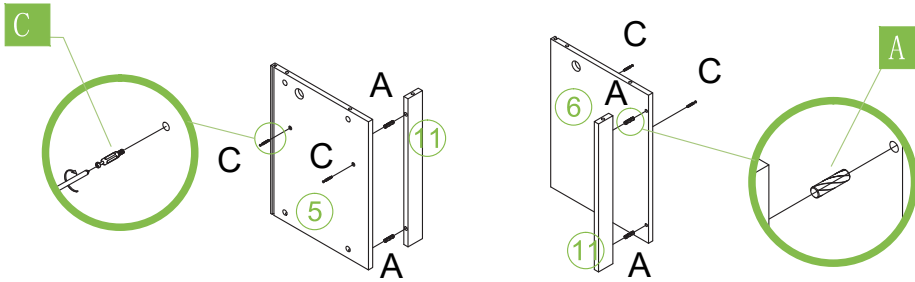

	A x 4PCS
	C x 4PCS

6

Connect the part assembled in step 5 with the part assembled in step 4:
1.Use 2 wooden dowel “A” to connect 2 of part⑪ and part②.
2. Use 4 cam lock “B” to connect part⑤&part⑥ to part②, and turn the screw clockwise;

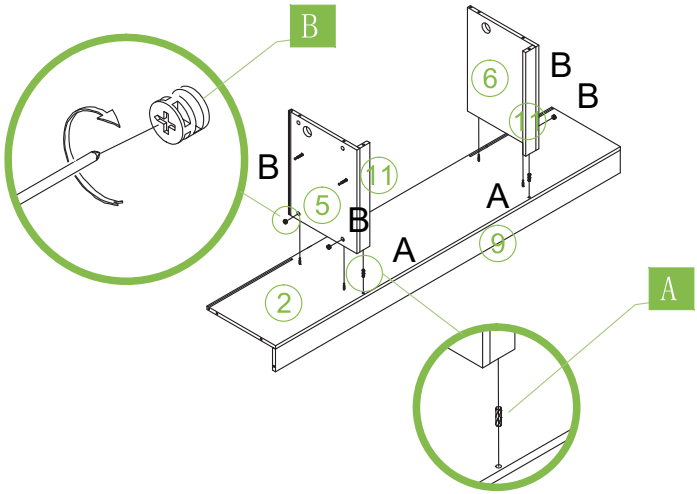

	A x 2PCS
	B x 4PCS

PRODUCT ASSEMBLY

7 Attach 5 cam bolt “C” to part③, repeat the same action to attach 5 cam bolt“C” to part④.

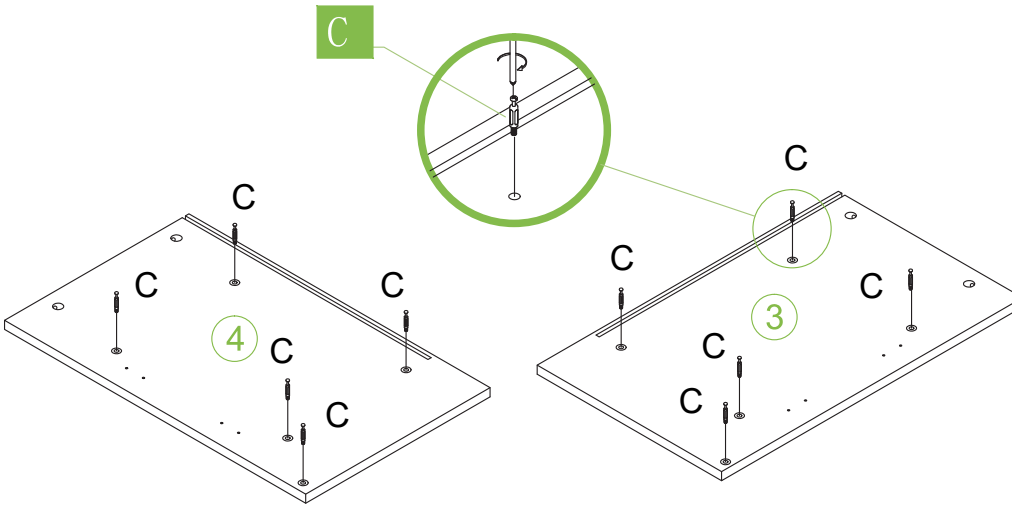

C x10PCS

PRODUCT ASSEMBLY

8

1. First connect part⑦ and part⑥;
2 Connect part ③ and part ⑦ and⑨;
3. Use 4 cam lock “B” to lock the screw on part⑦, use 2 cam lock “B” to lock the screw on part②, and then use 1 cam lock “B” to lock the screw on part⑨;
4. Use the same method to connect part⑦ with part⑤;
5.Use the same method to connect part④ with part⑦&Part②&Part⑨.

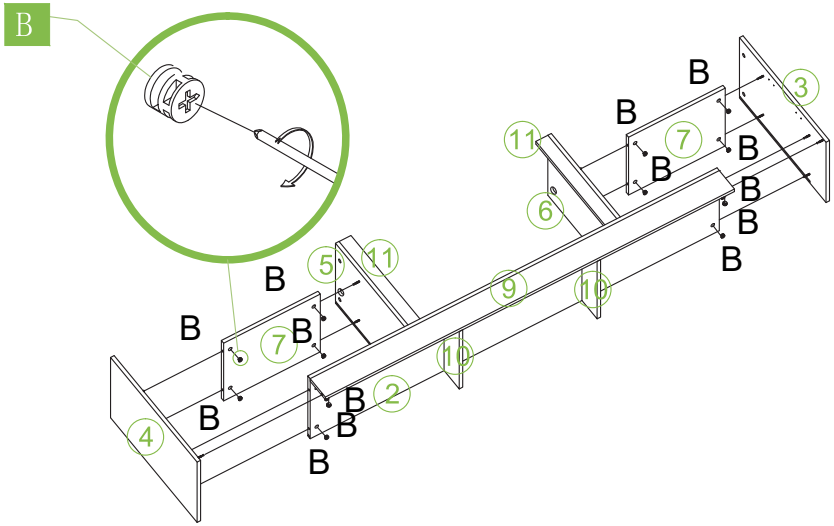

NOTE: When installing part⑦,
pay attention to leave the slot position.

B ×14PCS

PRODUCT ASSEMBLY

9 Push part⑫ along the slot to the end

NOTE:

1. when it reaches the end, it also needs to be stuck in the slot of part②.
2. The side with the round hole (of part⑫) is on the top.

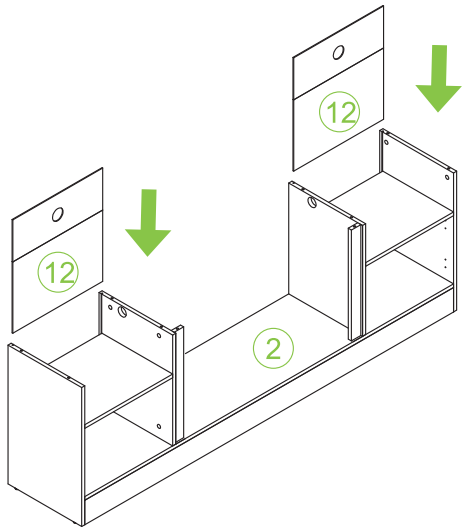

10 Install 8 cam bolt “C” into part①.

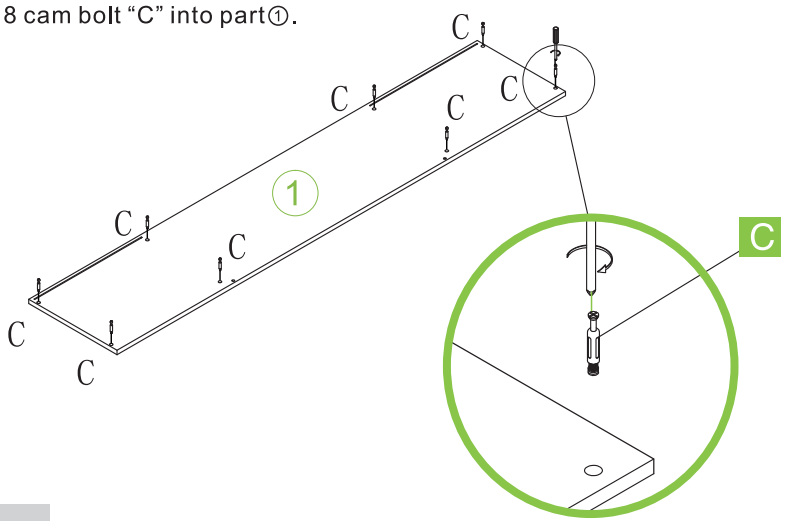

C x 8PCS

PRODUCT ASSEMBLY

11 Use 2 wooden dowel“A” and 8 cam lock “B” to connect part① to part③④⑤⑥⑪ respectively,and turn the screws clockwise

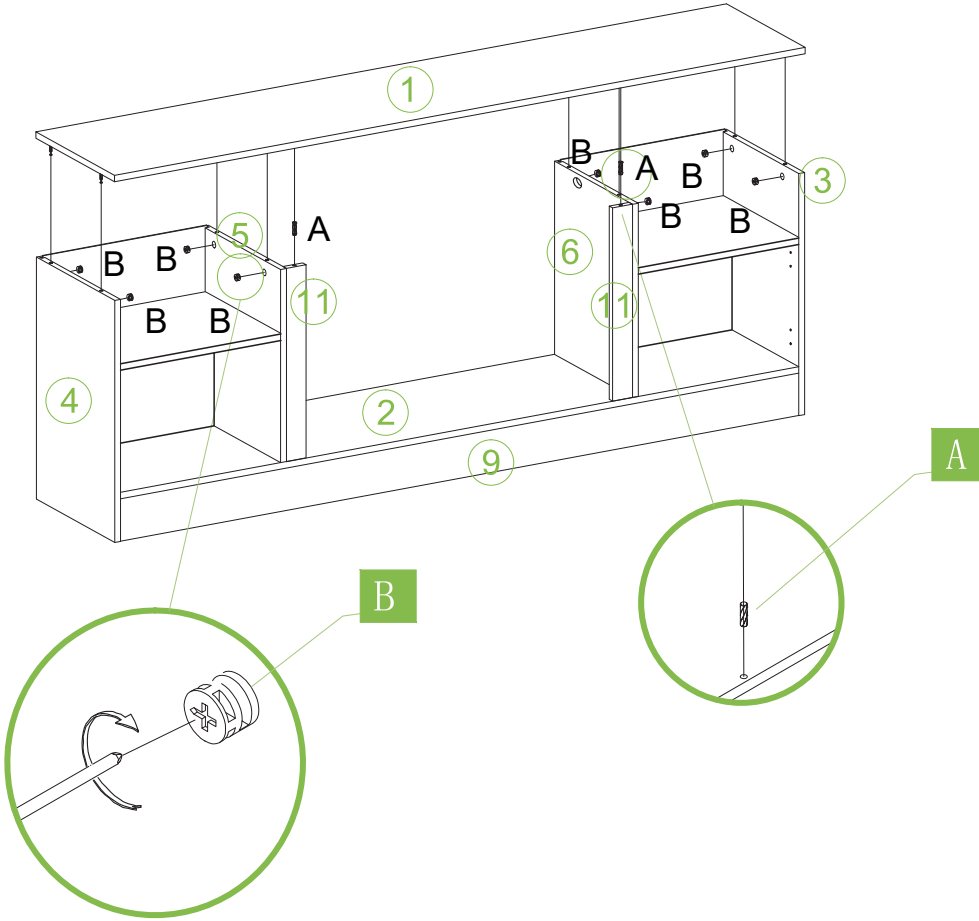

	A x2 PCS
	B x8 PCS

PRODUCT ASSEMBLY

12

1. Install a pair of hinge "D" on part⑧ first, and then install the part⑧ on the part③.
2. When installing part⑧ to part③, first install the 4 screws in the oval hole of hinge "D" (corresponding to the four small holes of part③).
3. Close part⑧ to see if the position of part⑧ is suitable. If not, you can adjust the screws of oval hole of hinge "D".
4. After adjusting, lock the 4 round holes of hinge "D" with screws.
5. In the same way, install part⑧ on part④.

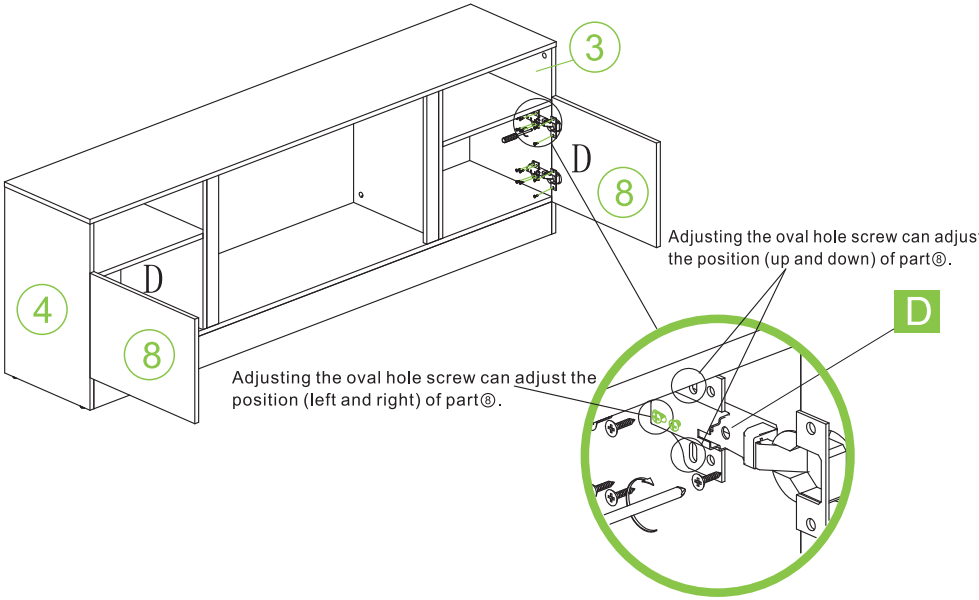

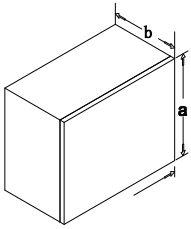

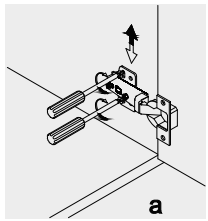

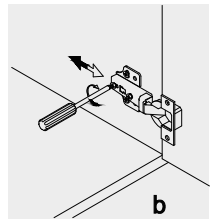

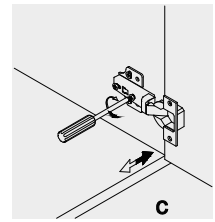

D x 2PCS

Note: When the position of part⑧ is found to be inappropriate after installation (for example, one side of the door is too large, or part⑧ is scratched with other parts, etc.), you can adjust the position of the cabinet door (up, down, left and right) by screwing.

PRODUCT ASSEMBLY

Steps to install the fireplace into the TV Stand

NOTE: Dear customer, if you purchase a TV stand & fireplace set, the package for the fireplace and the package for the TV stand will be delivered separately.
If you purchase only the TV stand, the fireplace is not included.

1

Remove four silver screws from the sides of the heater (two screws on each side).
Remove two screws from the front of the heater.
Remove the tempered glass by lifting it from the lugs on the side.

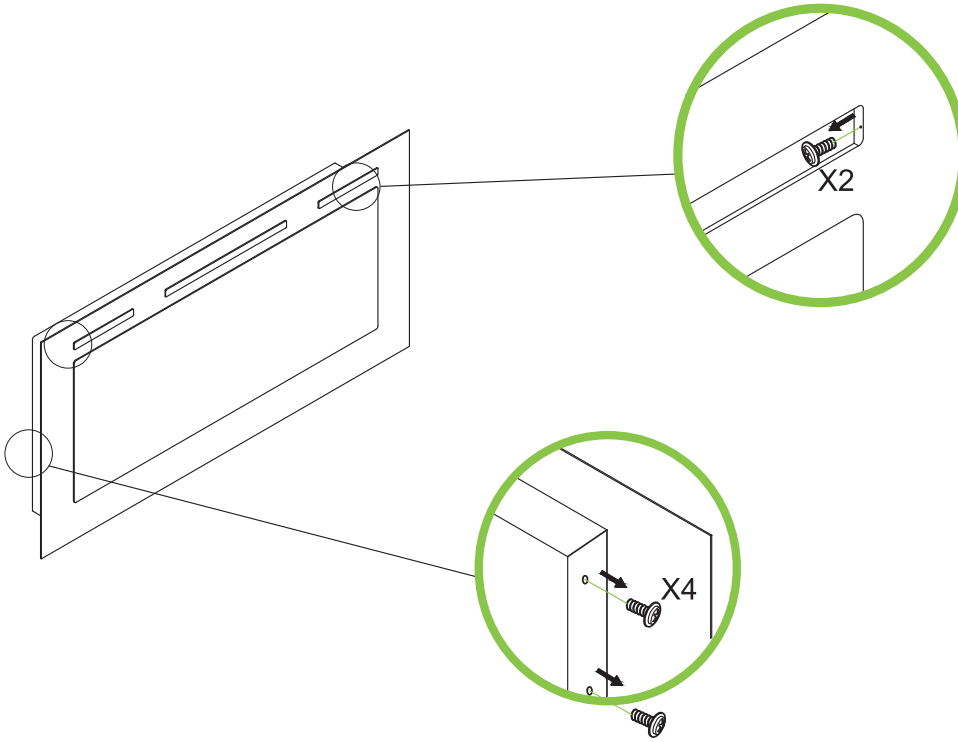

PRODUCT ASSEMBLY

Steps to install the fireplace into the TV Stand

2 Take the glass from the appliance first, them gently put the appliance to the TV Stand by two persons.

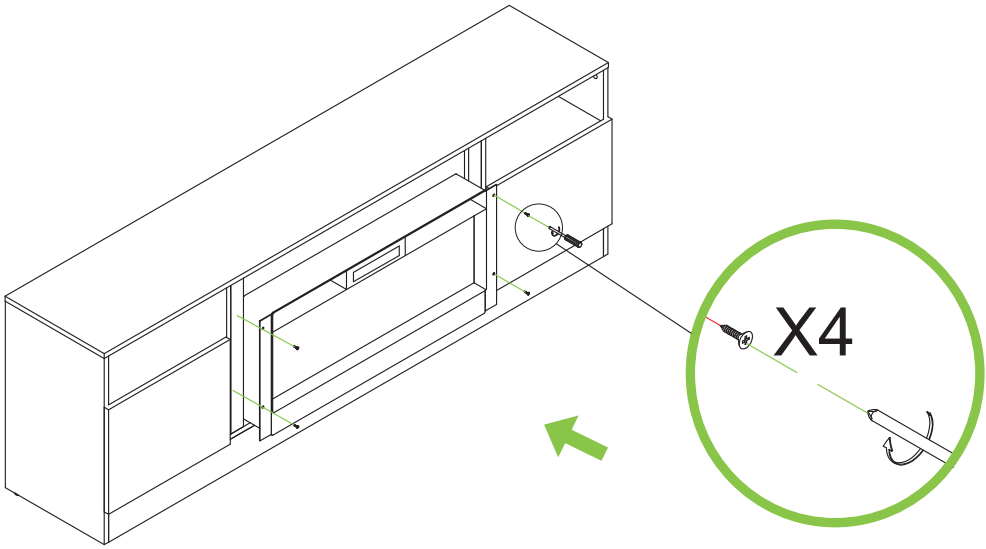

Fix the appliance to the TV stand with 4 black screws according to the hole position of fireplace.

PRODUCT ASSEMBLY

3 Place the front glass surround over the front of the fire aligning the slot in the bracket at each side of the glass panel with the lugs on the sides of the fire.

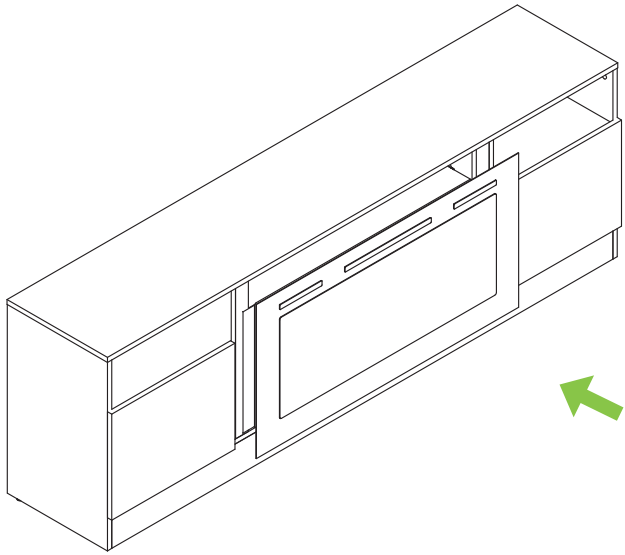

4 Fix the tempered glass with 2pcs of 4*8mm screws provided.

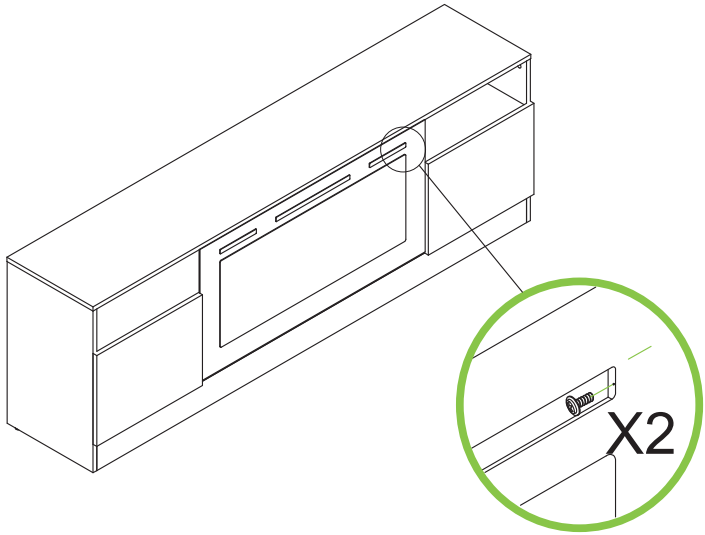

PRODUCT ASSEMBLY

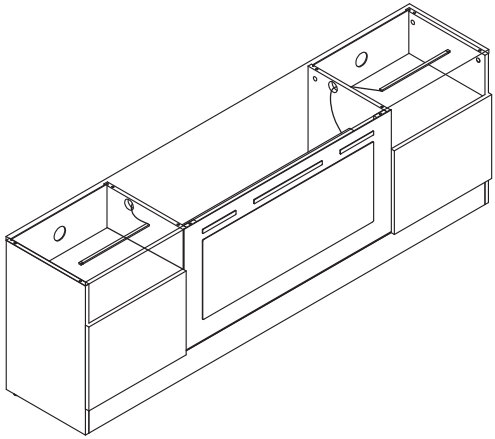

1. Put the light strip wire through the hole (one long wire and one short wire) ;
2. Put the long one on the side farther from the fireplace wire; the short one on the side closer to the fireplace wire ;

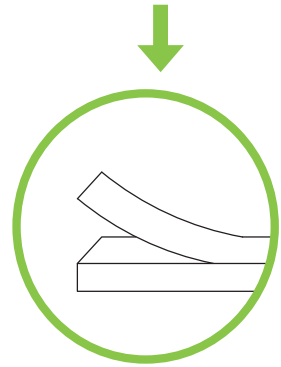

3. Tear off the double-sided tape of the light strip and stick it on the board ;

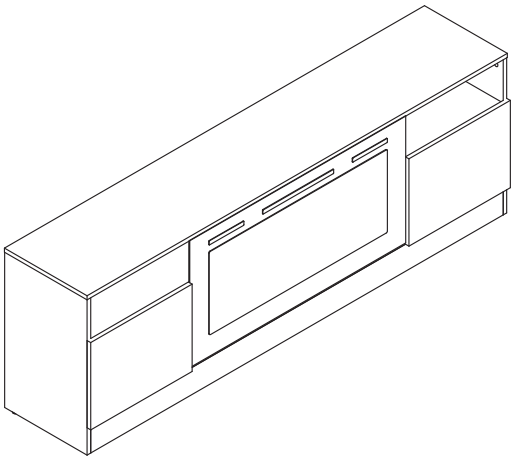

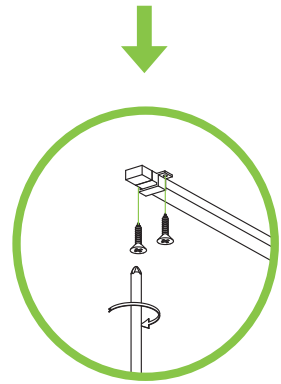

4. Hold the light strip with the clip and lock the screw.

HELP CENTER

Question about your product? We're here to help. Visit us at:

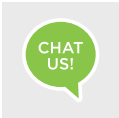

Chat Support

Product Inquiry

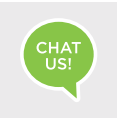

Orders FAQ

Product Assembly

Returns & Refunds

We Stands Behind the Quality of Their Furniture

If you have any issues with your item please let us know! We will always do our best to come up with a solution that you will be happy with.
Please get in touch with our customer service team before returning the product.
And pls do not throw the original box(es) if you have not finished assembling or confirmed no quality issues.

Length of return period:

Items can be returned within 30 days of purchase.
In the meanwhile, everything you purchased from us comes with a one-year warranty.

Who is responsible for the return shipping fee:

We will cover the return shipping fees if:

1. Your item has a manufacturing defect in its materials or workmanship. For example, torn wicker or misaligned screw holes. We will send you a prepaid shipping label after photos are sent.
2. Your item has been damaged in transit. For example, glass is broken or wicker is damaged. We will send you a prepaid shipping label after photos are sent.
3. You receive the wrong box(es) due to a warehouse error. We will send you a prepaid shipping label after photos are sent of the wrong SKU numbers on the outer box(es).
4. One or more boxes are lost in transit. We will send you a prepaid hipping label if you no longer want the item.

*However, we still hope to work with you for a better solution instead of a return. Please don't hesitate to contact our customer service team.

Customer will cover the return shipping fees if:

1. You don't like the product(s) after receiving the box(es).
2. You no longer need the product(s) but you have received the box(es).
3. You buy the product(s) by mistake but you have received the box(es).
4. Order/Shipment cancellation failed and you have received the box(es).

Return Request

In order to get a full refund as described in this return policy, all items must be: (1) In a brand new/unused condition, please provide photos before and after packaging. (2) When returning, all accessories and parts are firmly packed in all original packaging.
If your return does not meet the requirements, you may not get a full refund.

When will I be refunded?

The refund is released once the goods have been returned to our warehouse.

What if the product is damaged/defective outside of the valid return period?

We want you to be a happy customer. Please reach out to us by email and we will come up with a solution to make sure you are satisfied.