Assembly Instructions

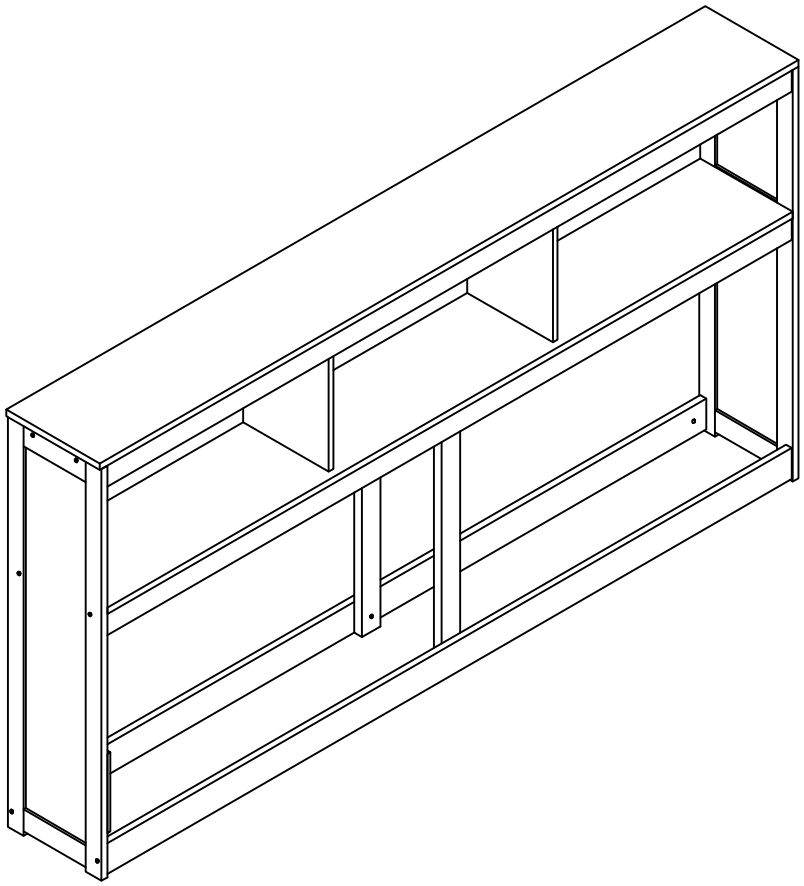

ASSEMBLY RATING

The Assembly Rating is a 5-point system that shows the degree of effort needed in assembling a specific product (with 1 being easy and 5 being difficult). For some products, two persons are recommended.

EASY ●●●●○ DIFFICULT

Tools Required For Assembly:

Allen Wrench 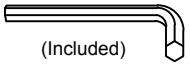 (Included)

Phillips Screwdriver 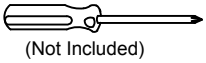 (Not Included)



2 PERSONS RECOMMENDED

ASSEMBLY & CARE ADVICE

FOR YOUR FURNITURE TO LAST,CORRECT ASSEMBLY AND PROPER MAINTENANCE ARE NECESSARY.
PLEASE FOLLOW THE INFORMATION PROVIDED BELOW TO FULLY ENJOY YOUR FURNITURE.

BASIC ASSEMBLY TECHNIQUES

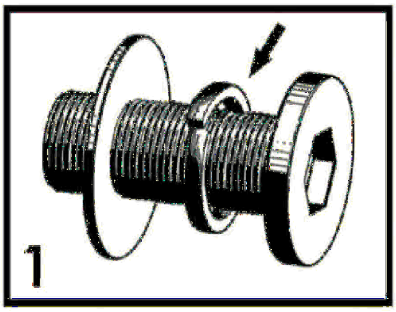

When lock or spring washer is used in an assembly, please make sure the lock or spring washer is placed between the larger flat washer and the head of the screw or bolt.

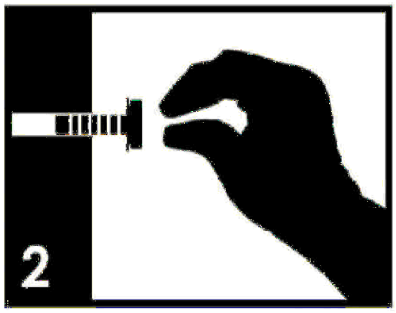

Position each part correctly and insert screws or bolts into their respective holes by hand tighten or using the proper hand tool. Only tighten when step is completed or when instructed to do so.

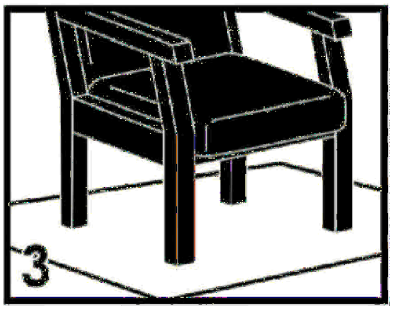

Use cardboard or carpet area when assembling furniture to prevent scratches .Make sure the furniture rests on a flat and level surface with each leg evenly touching the floor. No dragging of products/parts.

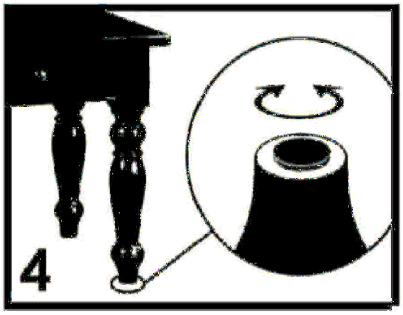

Some furniture comes with height adjusetment knobs underneath each leg. To lower or to raise each leg, you need to turn clockwise or counterclockwise, respectively.

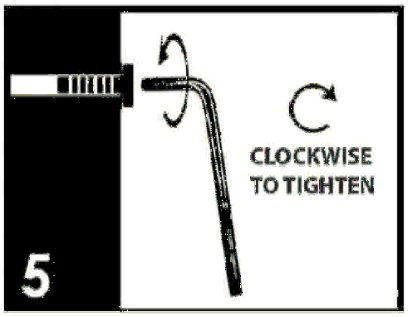

Make sure all parts are properly aligned, then use the appropriate hand tool to completely tighten the bolts or screws. Do not use power tools and do not overtighten.

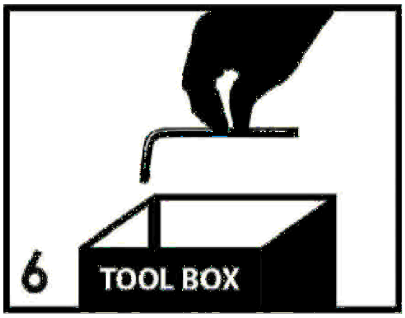

Save the instructions and store the Allen wrench or any supplied tool for later maintenance. After two weeks, check and tighten any loose hardware and repeat again every six months thereafter.

IT IS THE USER'S RESPONSIBILITY TO MAINTAIN THE FURNITURE.THE HARDWARE MAY LOOSEN OVER TIME AND MAY CAUSE THE FURNITURE TO BE WOBBLY AND UNABLE TO SUPPORT ITS INTENDED WEIGHT CAPACITY. THIS MAY LEAD TO COLLAPSE AND MAY CAUSE SERIOUS INJURY.

FAILURE TO FOLLOW THE GUIDELINES ABOVE MAY RESULT IN INJURY AND/OR PROPERTY DAMAGE.

FURNITURE OF AMERICA.ALL RIGHTS RESERVED.

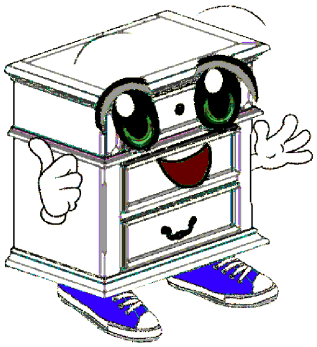

Before you begin, please read Page 2 of "Assembly and Care Advice".

And remember, do not tighten until each step is completed or instructed.

Parts List

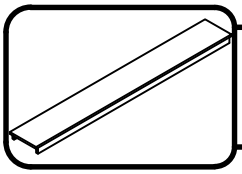

#1 x 1pc
Top Panel

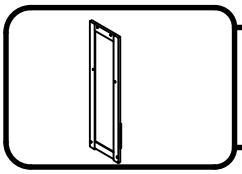

#2 x 1pc
Side Panel (Left)

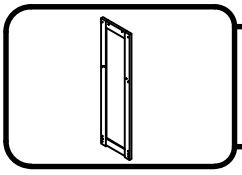

#3 x 1pc
Side Panel (Right)

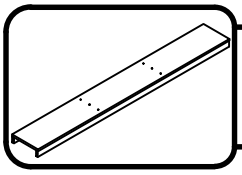

#4 x 1pc
Horizontal Panel

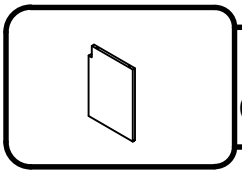

#5 x 2pcs
Center Vertical Panel

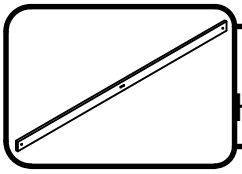

#6 x 2pcs
Horizontal Bar Cabinets

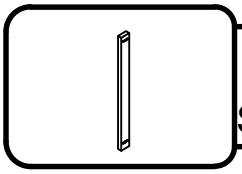

#7 x 2pcs
Support Rail

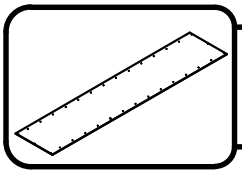

#8 x 1pc
Back Panel

Hardware List

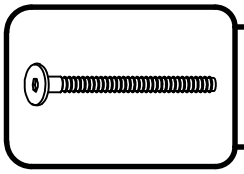

#A x 4pcs
Bolt Ø1/4" x 3-1/8"

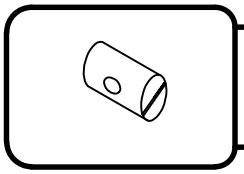

#B x 8pcs
Barrel Nut Ø1/4" x 1/2"

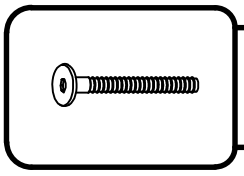

#C x 4pcs
Bolt Ø1/4" x 2-1/4"

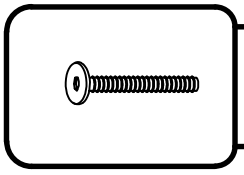

#D x 12pcs
Bolt Ø1/4" x 1-3/8"

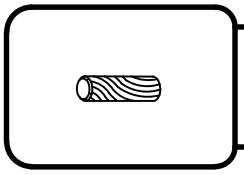

#E x 22pcs
Dowel Ø7/16" x 1-9/16"

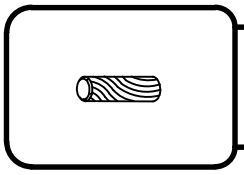

#F x 8pcs
Dowel Ø7/16" x 1-3/16"

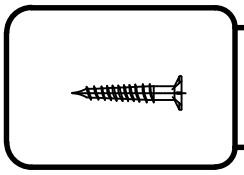

#G x 36pcs
Screw #4 x 15mm

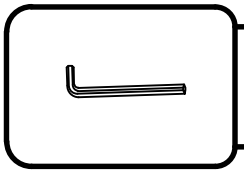

#H x 1pc
Allen Wrench 4mm

Exploded View

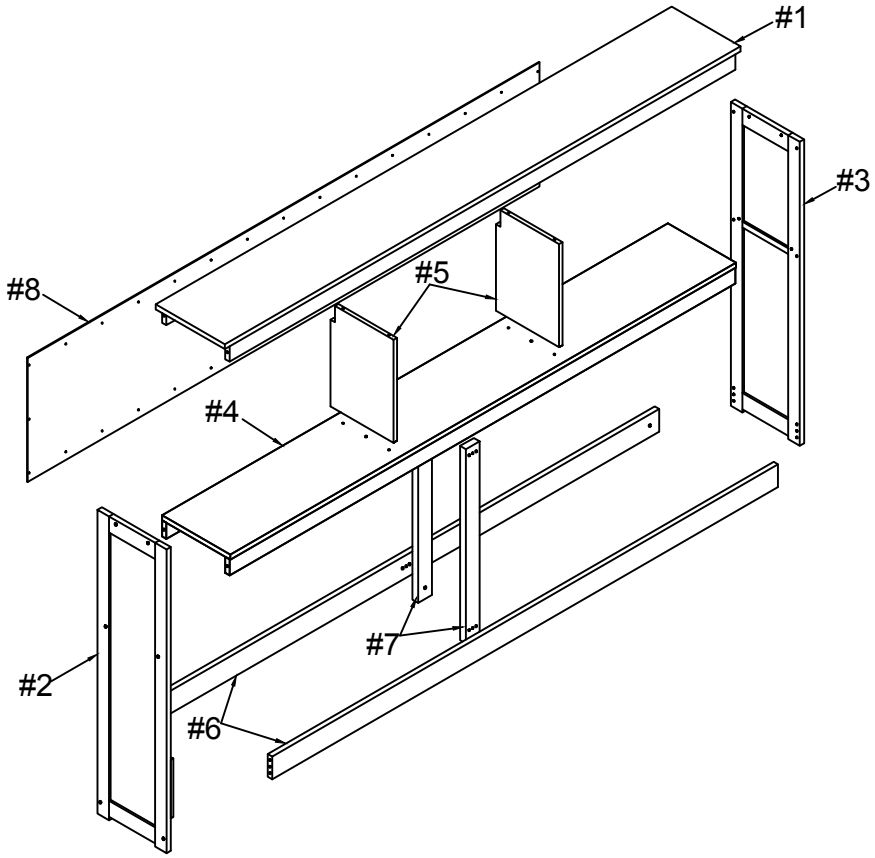



#C x 4pcs
#B x 4pcs
#E x 6pcs

Insert dowels (#E) to center vertical panels (#5), then align center vertical panels (#5) to the holes of the top panel (#1).

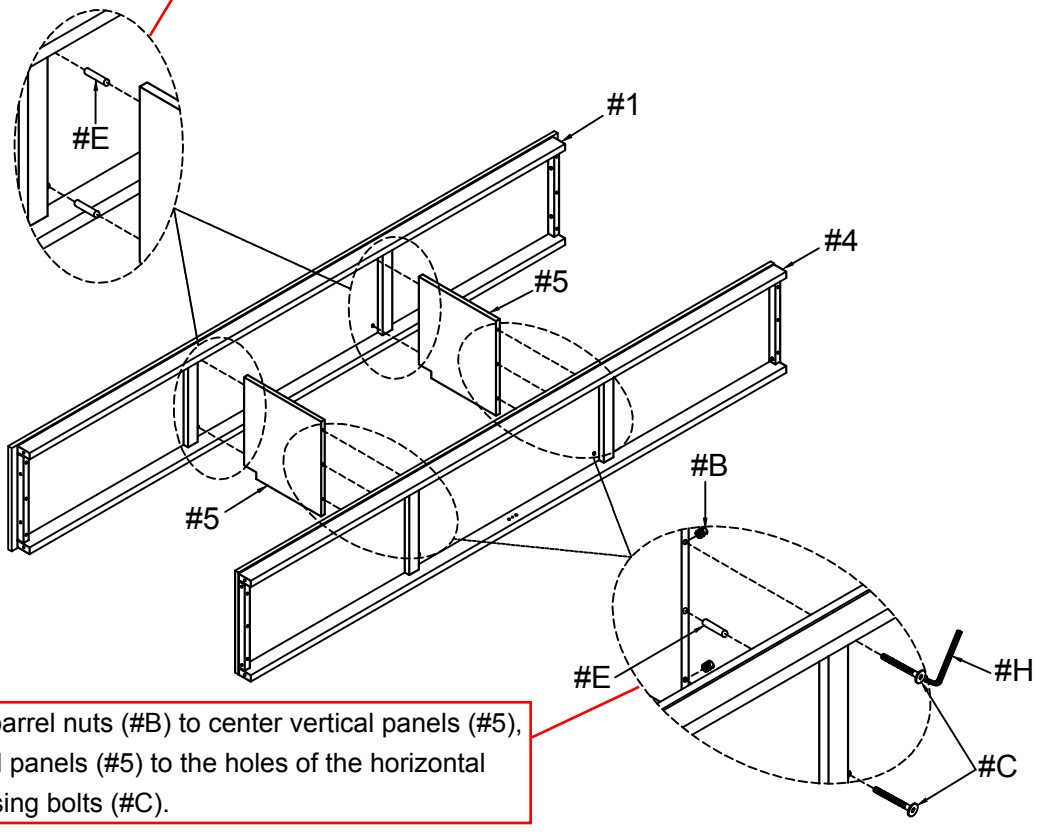

Insert dowels (#E) and barrel nuts (#B) to center vertical panels (#5), then align center vertical panels (#5) to the holes of the horizontal panel (#4). Secure by using bolts (#C).



#D x 8pcs
#E x 8pcs

Insert dowels (#E) to top and horizontal panels (#1,4), then insert dowels (#E) to horizontal bar cabinets (#6) from step 3. Align and attach side panels (#2,3) to the top, horizontal panels (#1,4) and bar cabinets (#6). Secure top and horizontal panels (#1,4) by using bolts (#D).

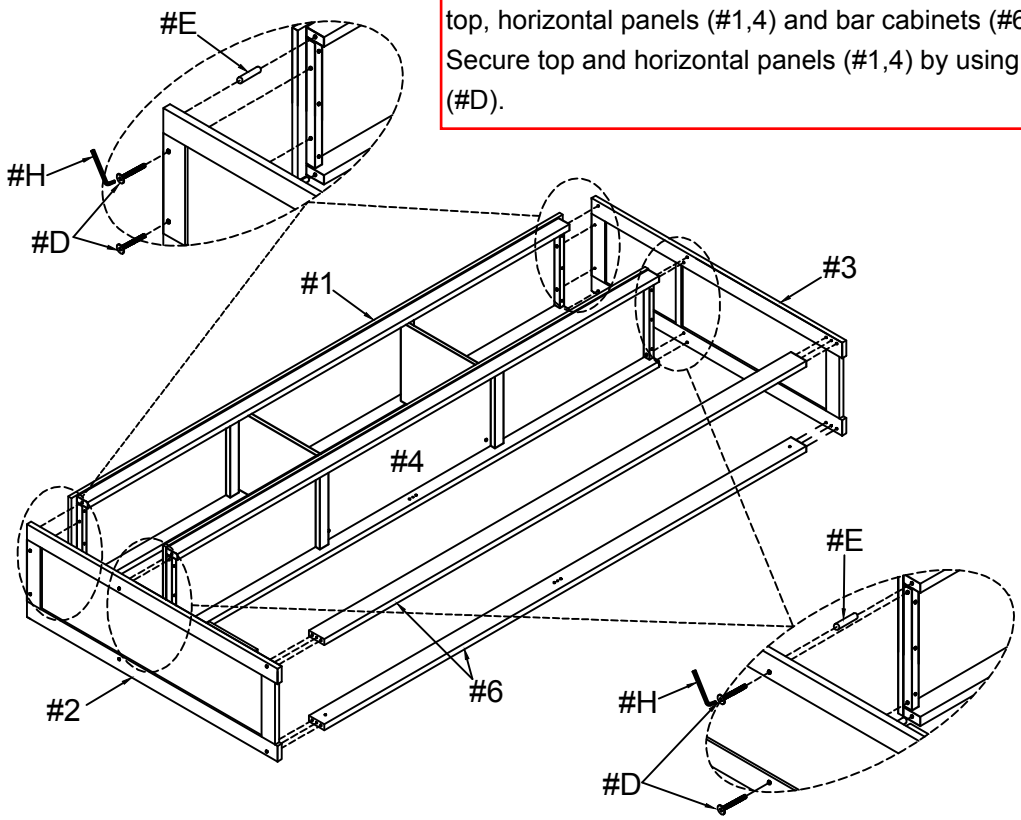



#A x 4pcs
#B x 4pcs
#E x 8pcs

Insert barrel nuts (#B) to horizontal bars (#6), then secure by tightening bolts (#A) to barrel nuts (#B).

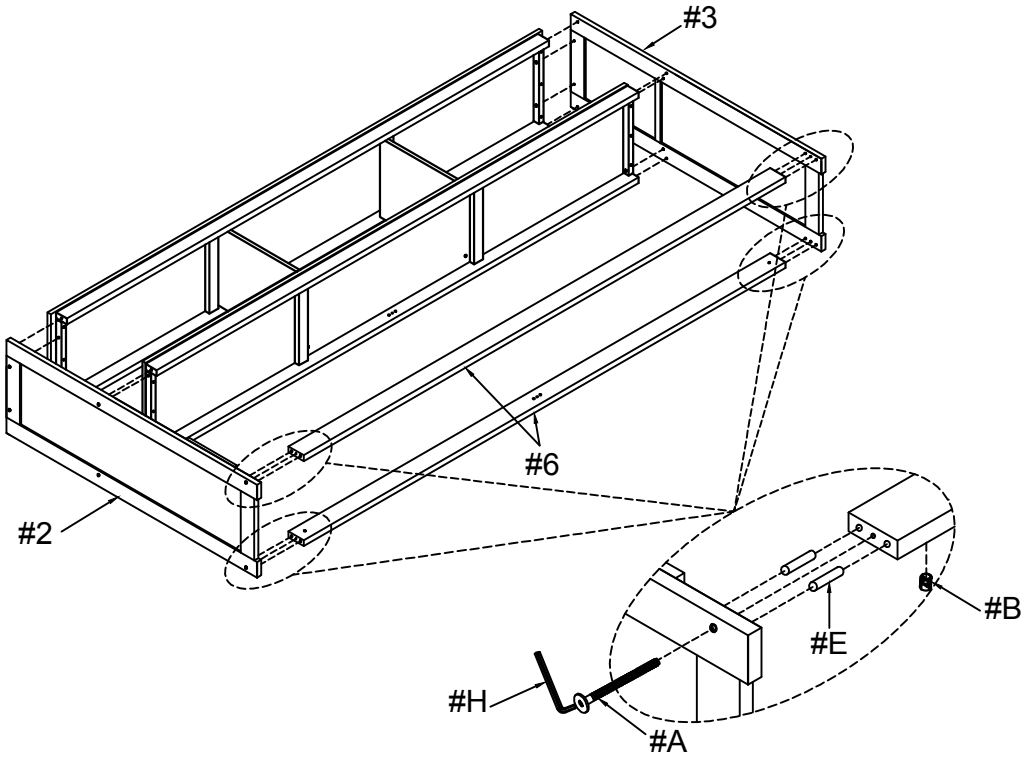



#G x 32pcs

Align back panel (#8) to the back of the unit, then secure by using screws (#G).

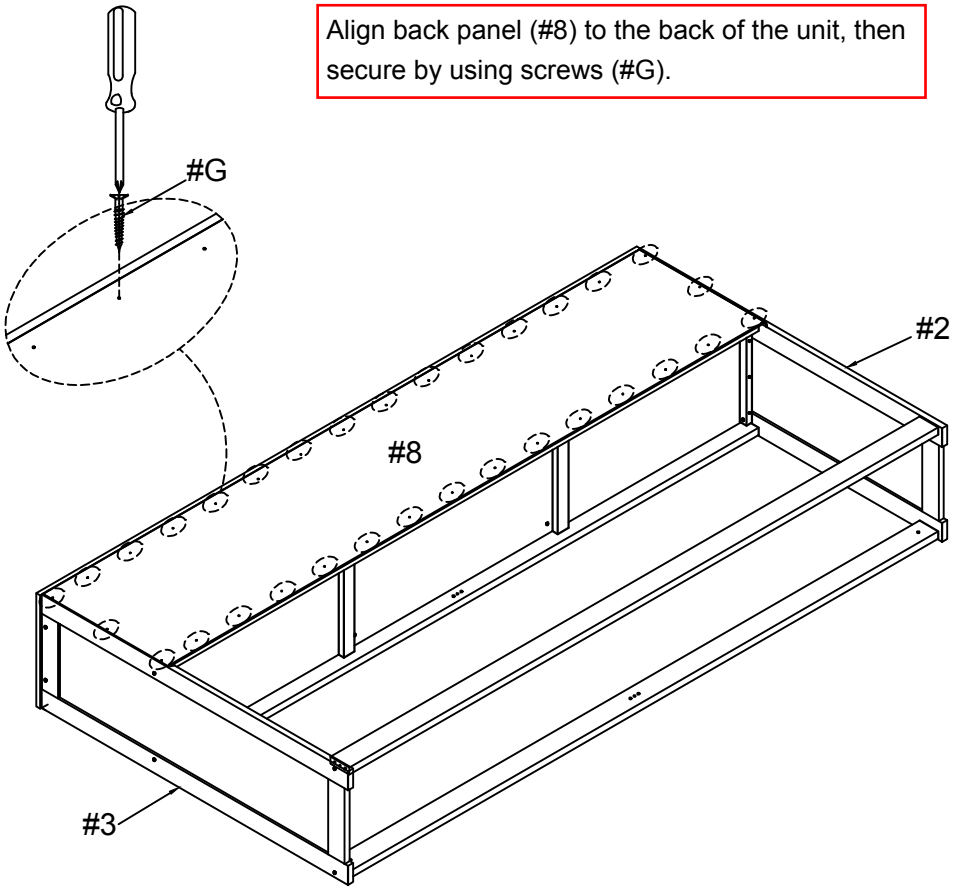



#D x 4pcs
#F x 8pcs

Insert dowels (#F) to the support rails (#7), then attach support rails (#7) to unit. Secure by using bolts (#D).

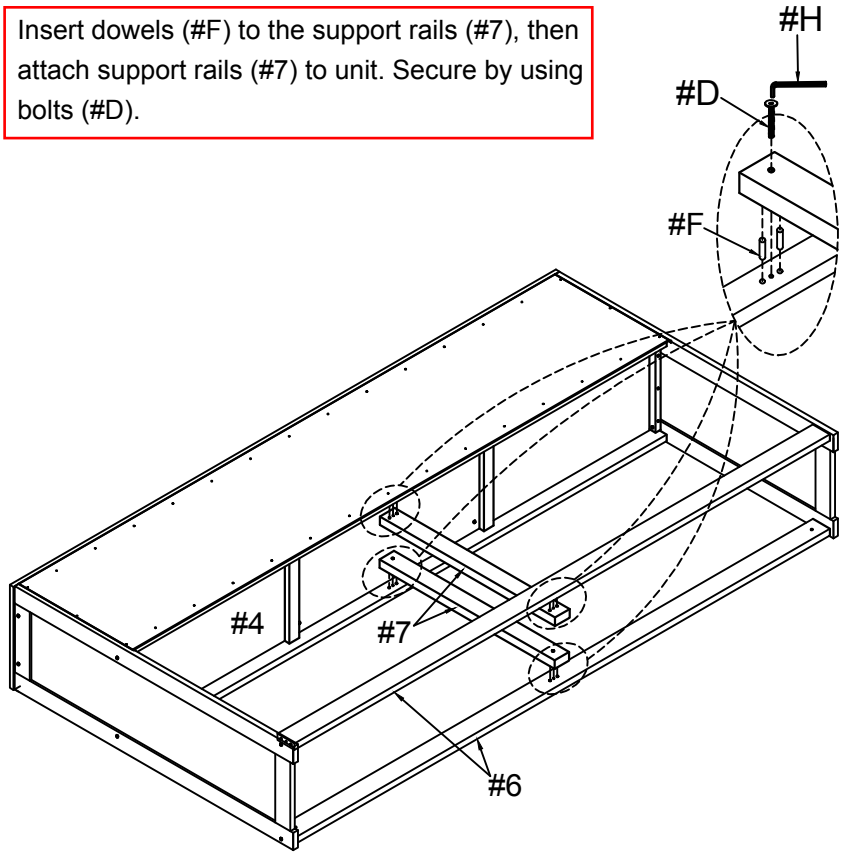



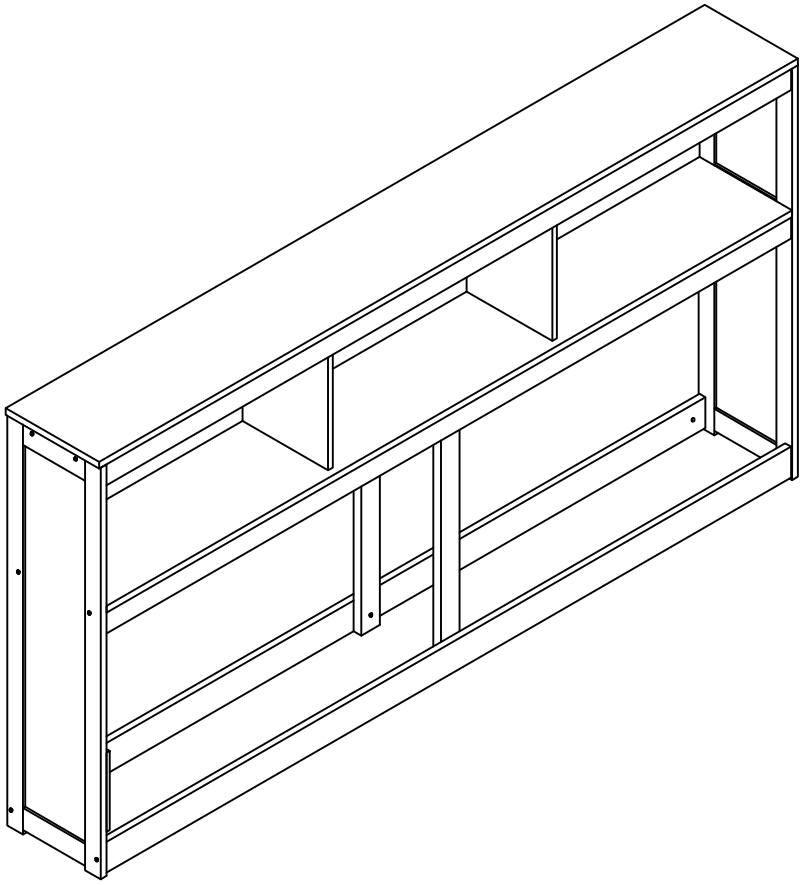



#G x 4pcs

Secure both bed and shelves together by using screws (#G).

