MonBlari

SHOWER ROOM

TW602

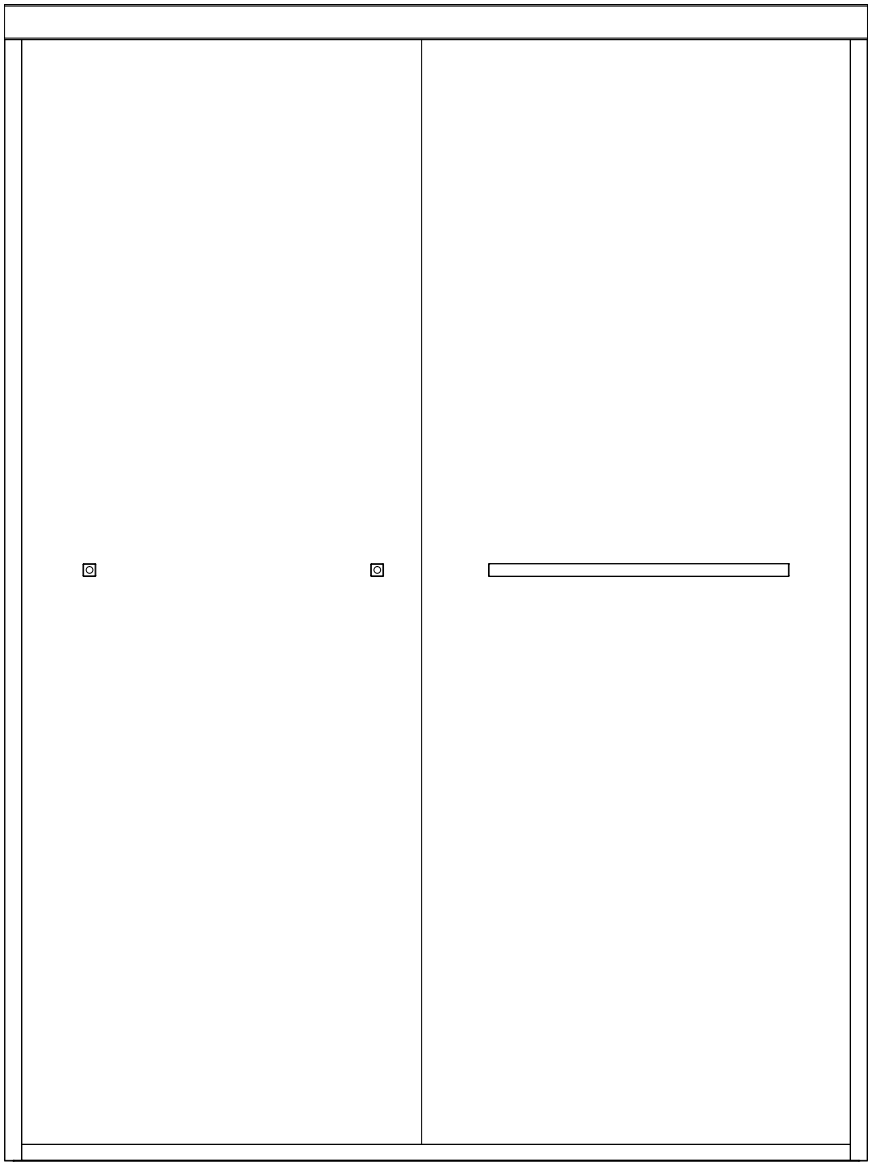

IMPORTANT SAFETY INFORMATION

⚠ WARNING

- Risk of injury. Tempered glass may shatter if damaged.
- Do not cut or drill tempered glass.
- Do not subject glass to impact.
- Wear safety gloves and safety goggles.
- Two-person installation is recommended.
- Failure to follow these instructions may result in serious injury.
- Always protect glass edges and corners during handling and installation.

INSTALLATION REQUIREMENTS

- Professional installation is strongly recommended.
- Install on a flat, finished, and plumb wall surface.
- Wall thickness tolerance should be within ±1/8 inch.

INSTALLATION NOTES

- Apply silicone sealant as instructed.
- Allow sealant to cure for at least 24 hours.
- Do not use the shower during this time.

TOOLS REQUIRED

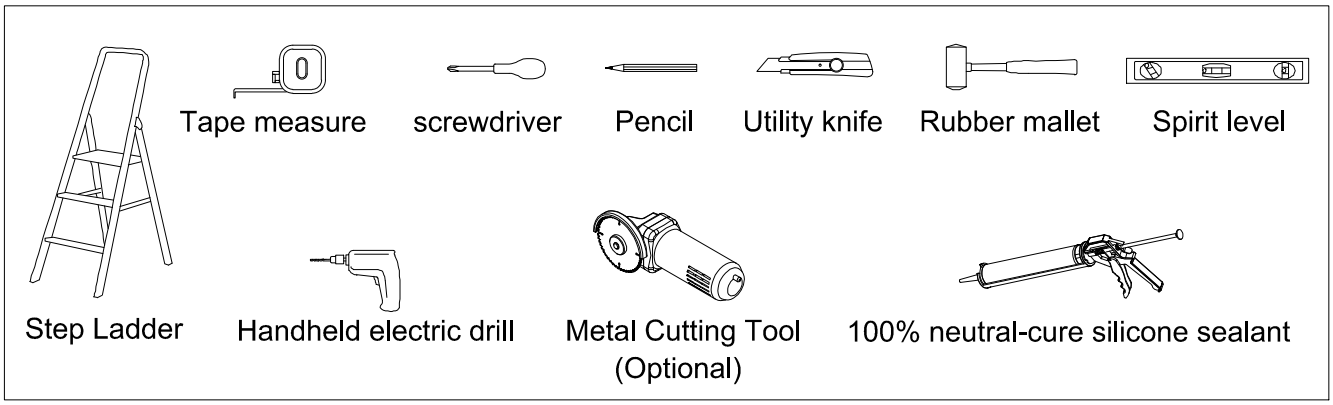

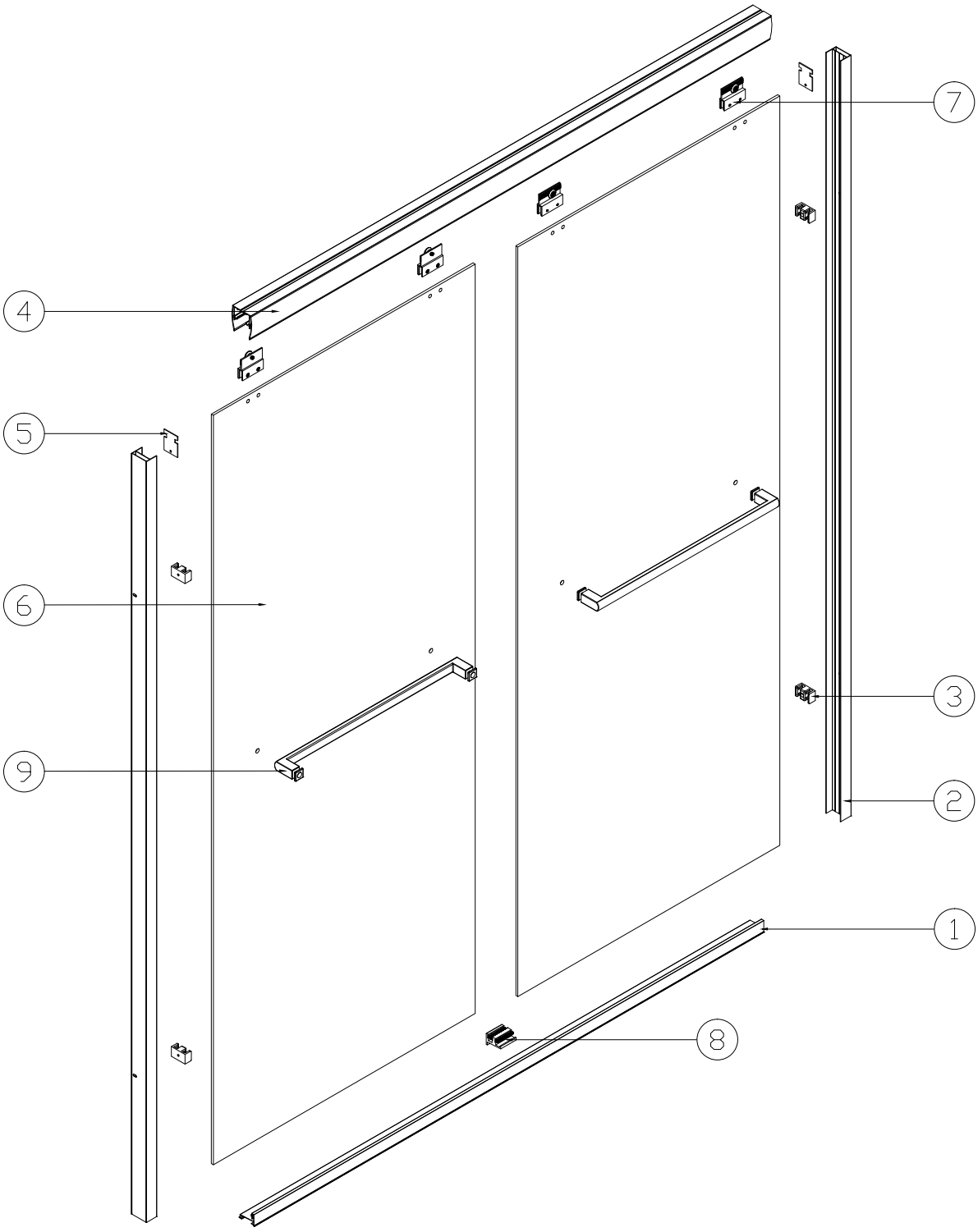

1	×1	5	×2	9	×2	13	×4
2	×2	6	×2	10	×4	14	×4
3	×4	7	×4	11	×4	15	
4	×1	8	×1	12	×4	16	

1

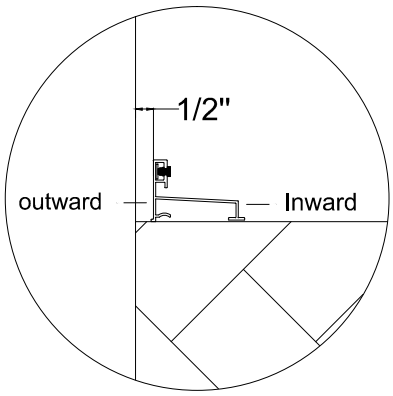

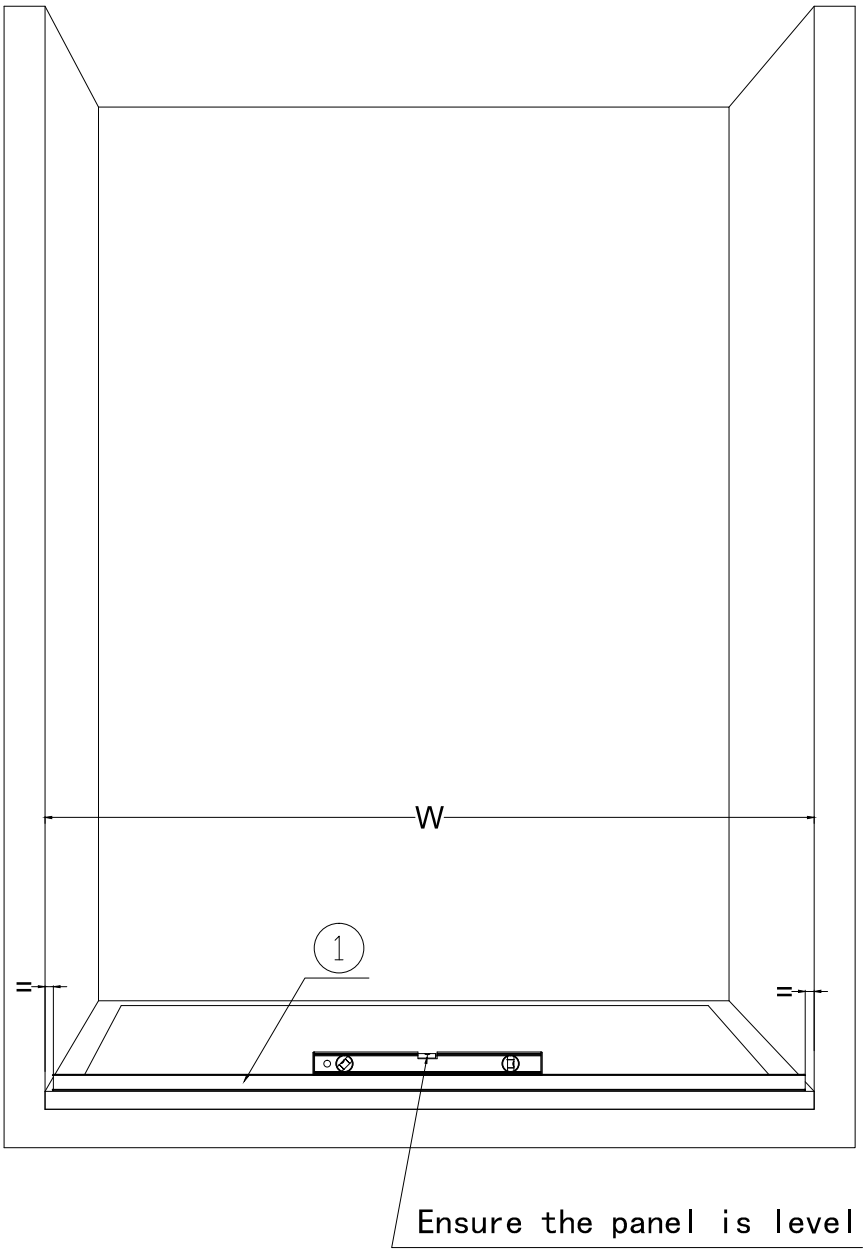

Apply silicone sealant to the bottom track

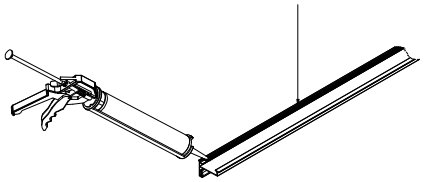

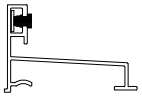

1

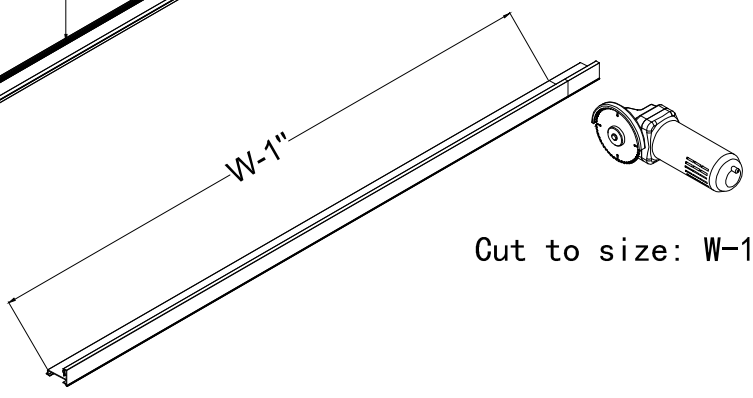

Cut to size: W-1"

2

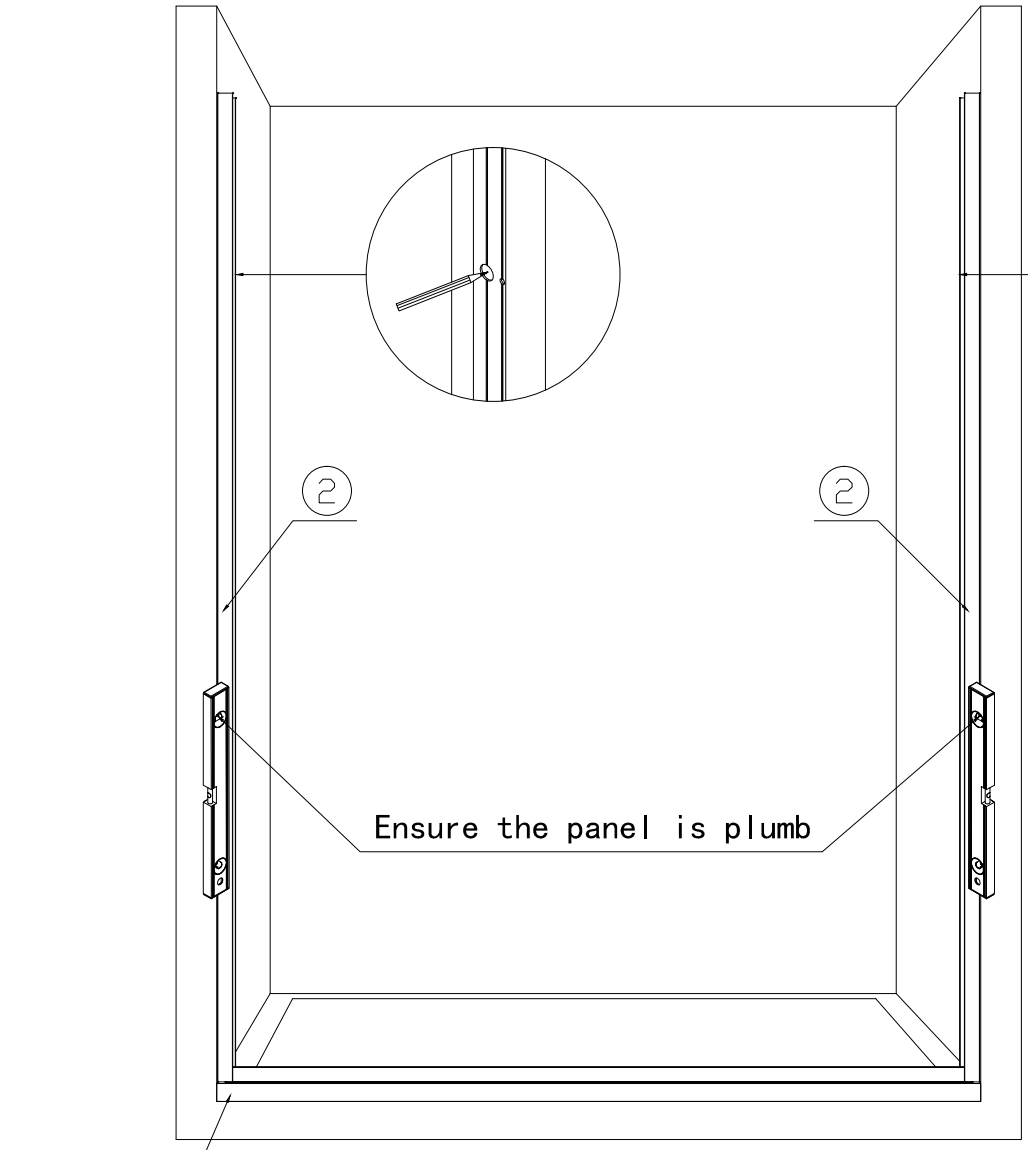

Drill ϕ1/4" holes



1

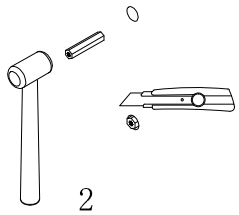

2

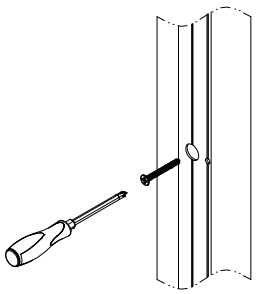

3

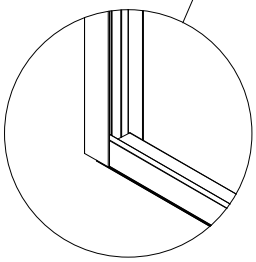



Insert wall anchors

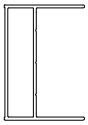

②



Please use M4x30mm self-tapping screws

3

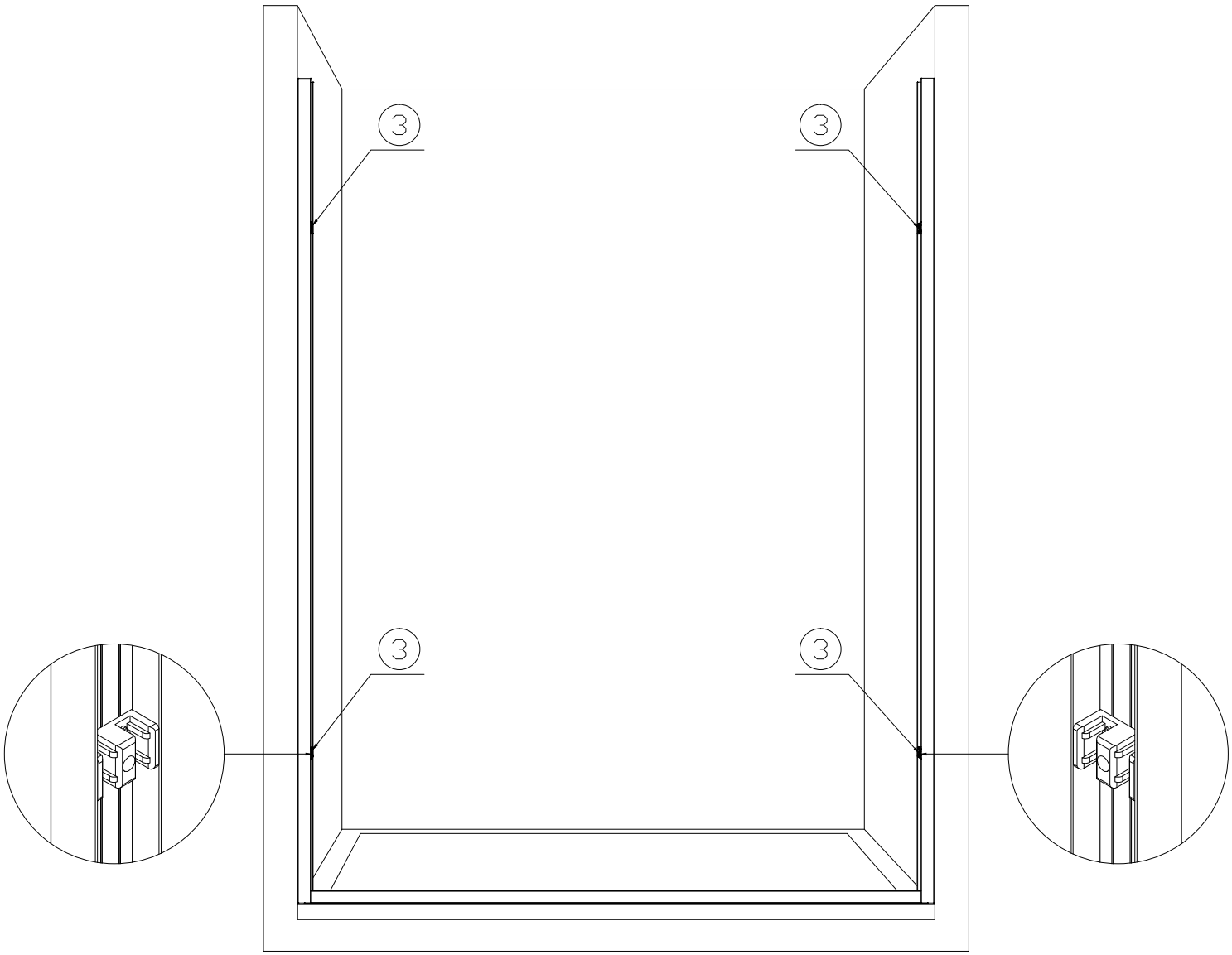

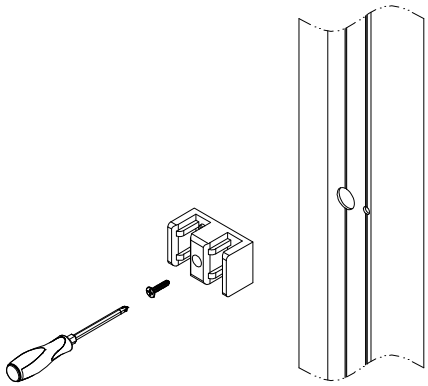

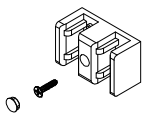

③

Please use M4x18mm self-tapping screws

4

Insert from the side

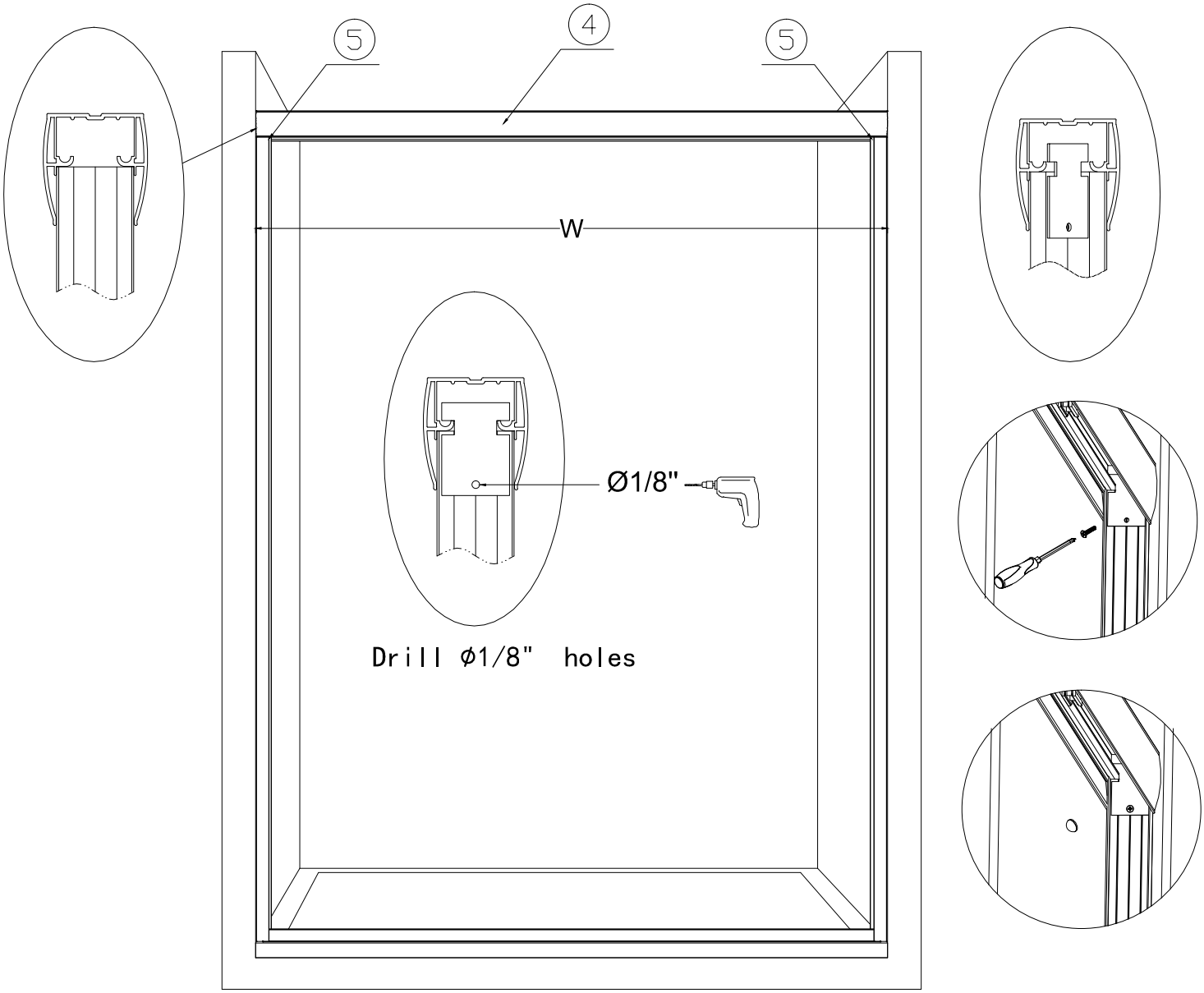

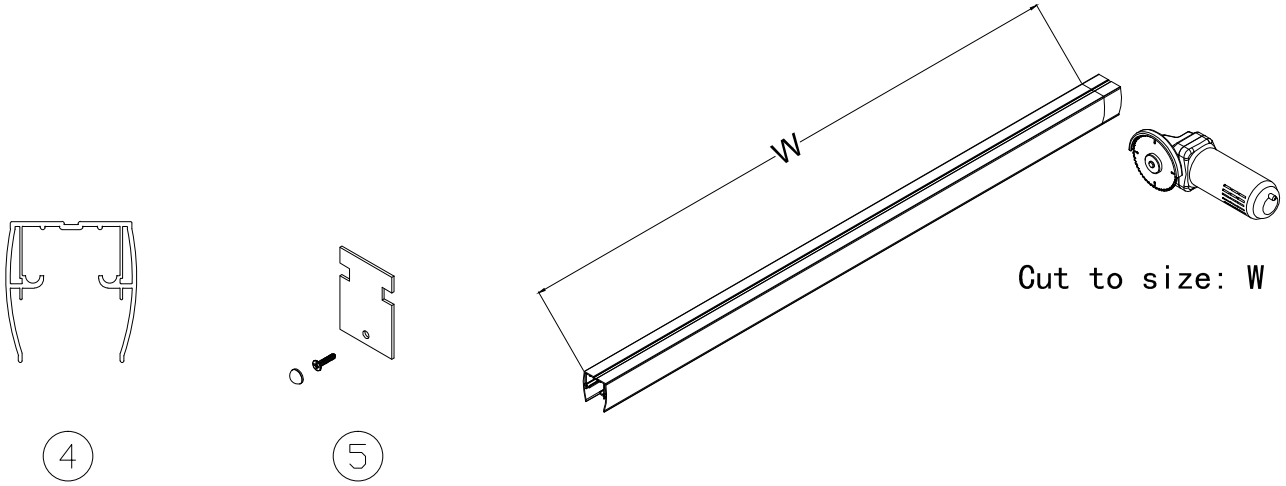

Please use M4x12mm self-tapping screws

5

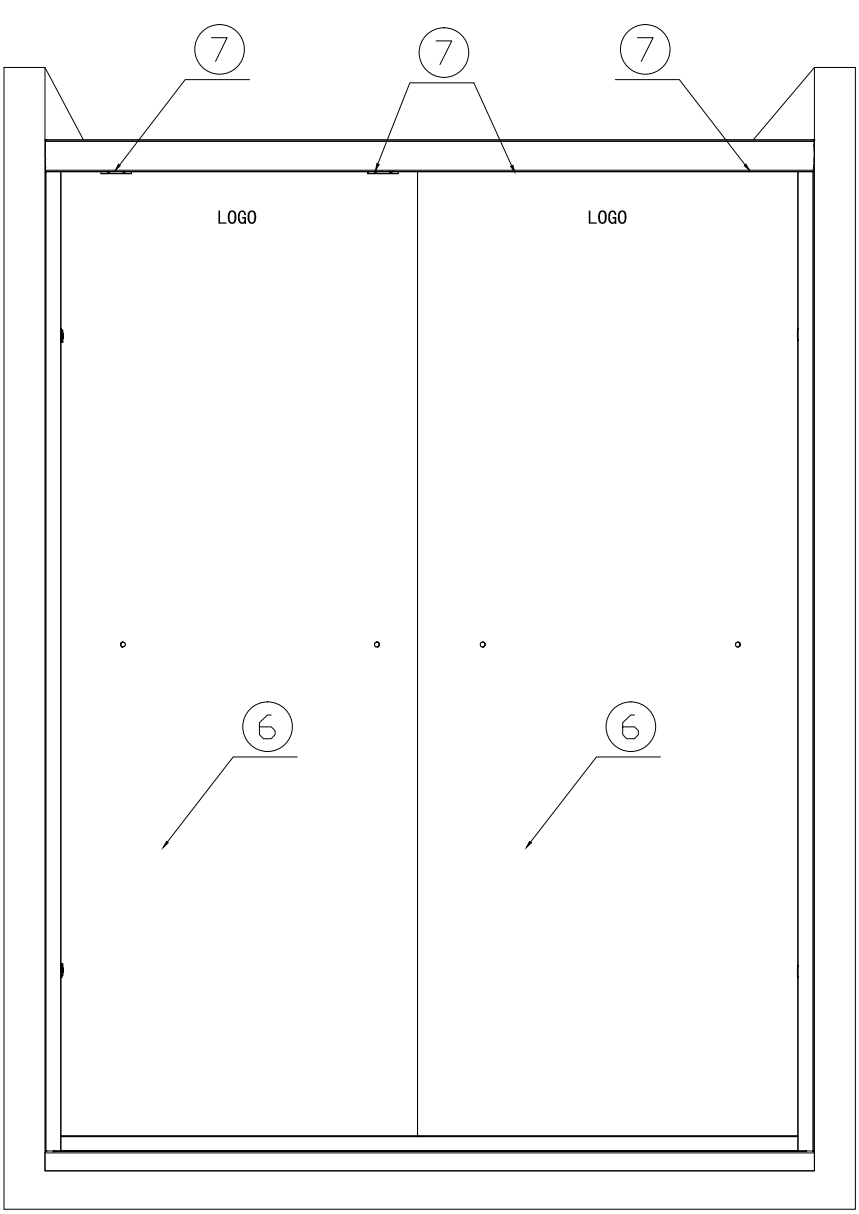

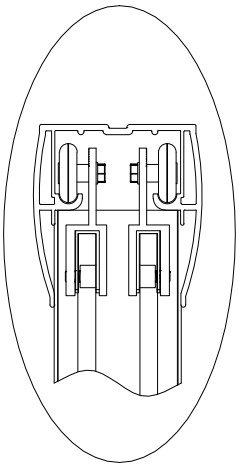

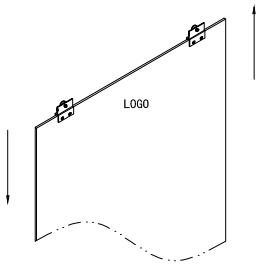

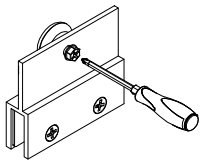

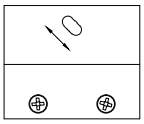

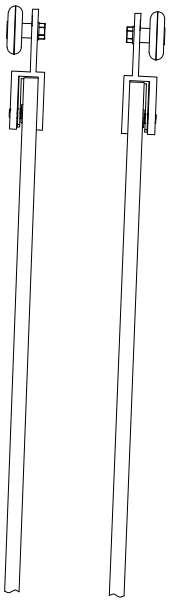

Tilt insertion

Adjust the height

Install the rollers onto the glass panel

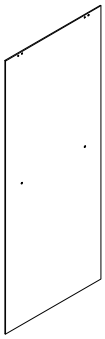

6

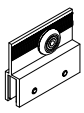

7

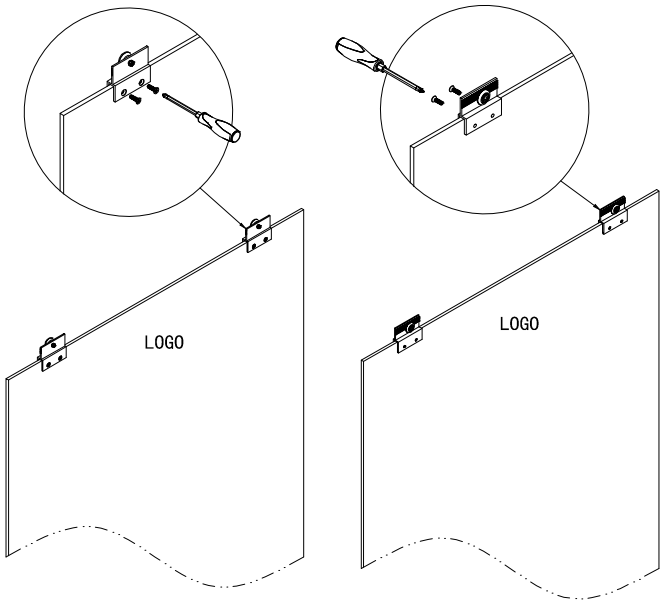

6

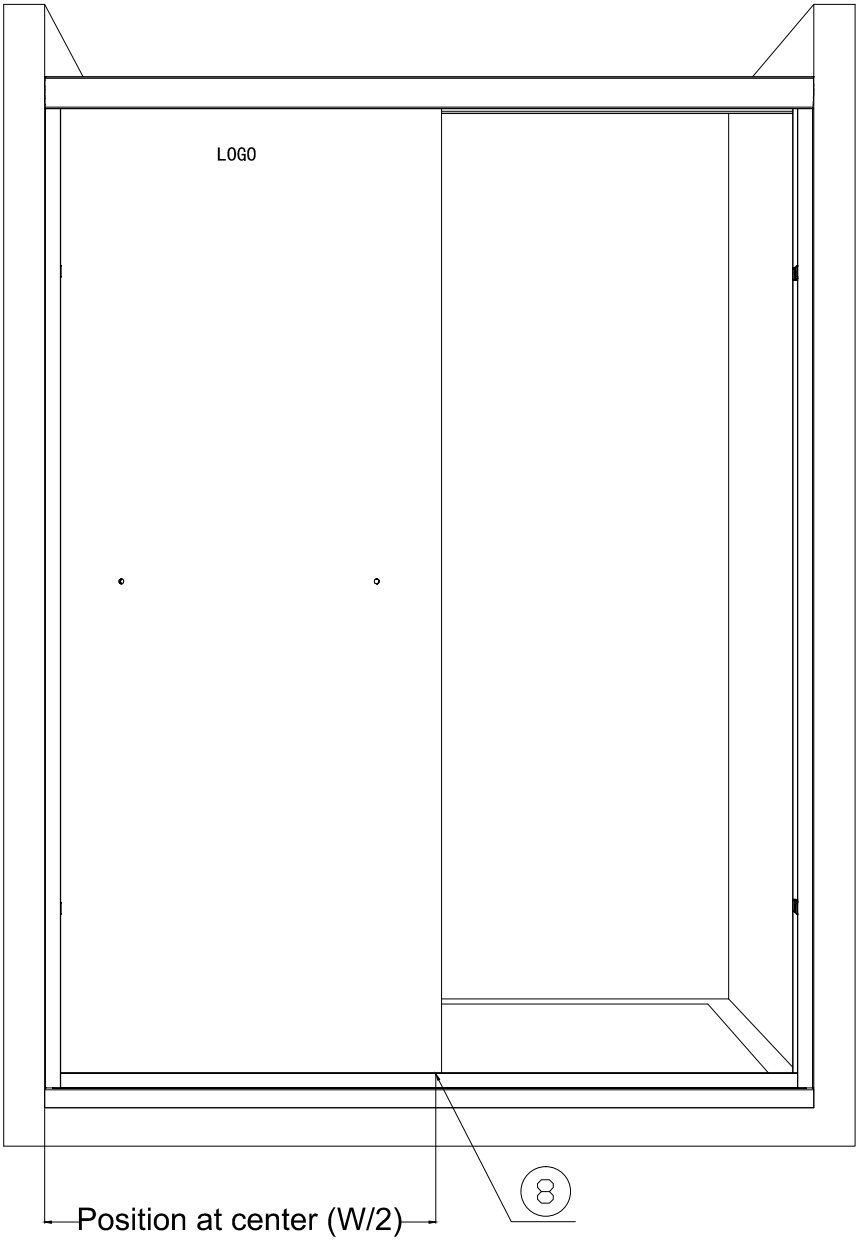

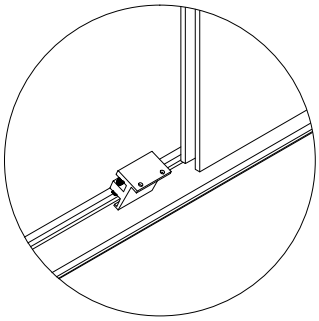

Tilt insertion

1

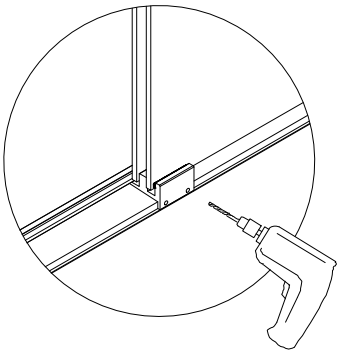

Drill ϕ1/8" holes

2

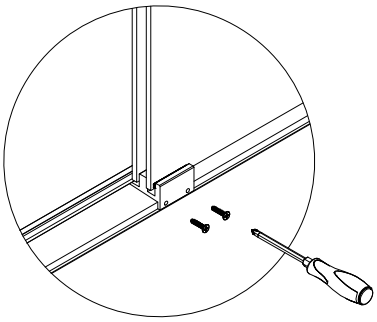

3

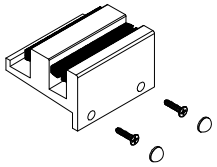

Please use M4x12mm self-tapping screws

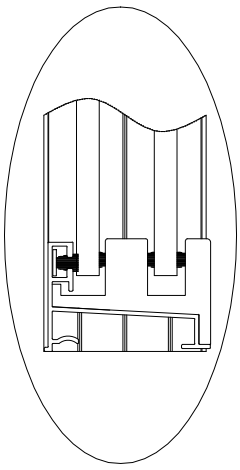

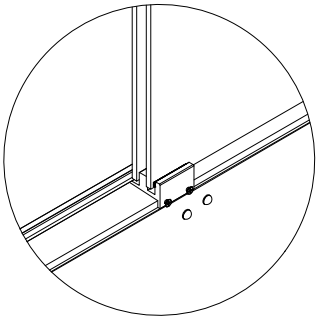

4

7

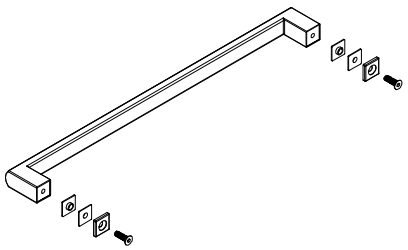

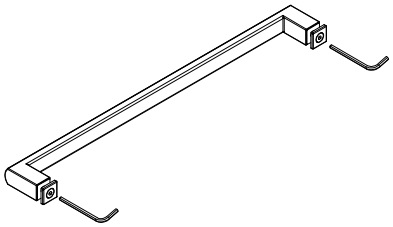

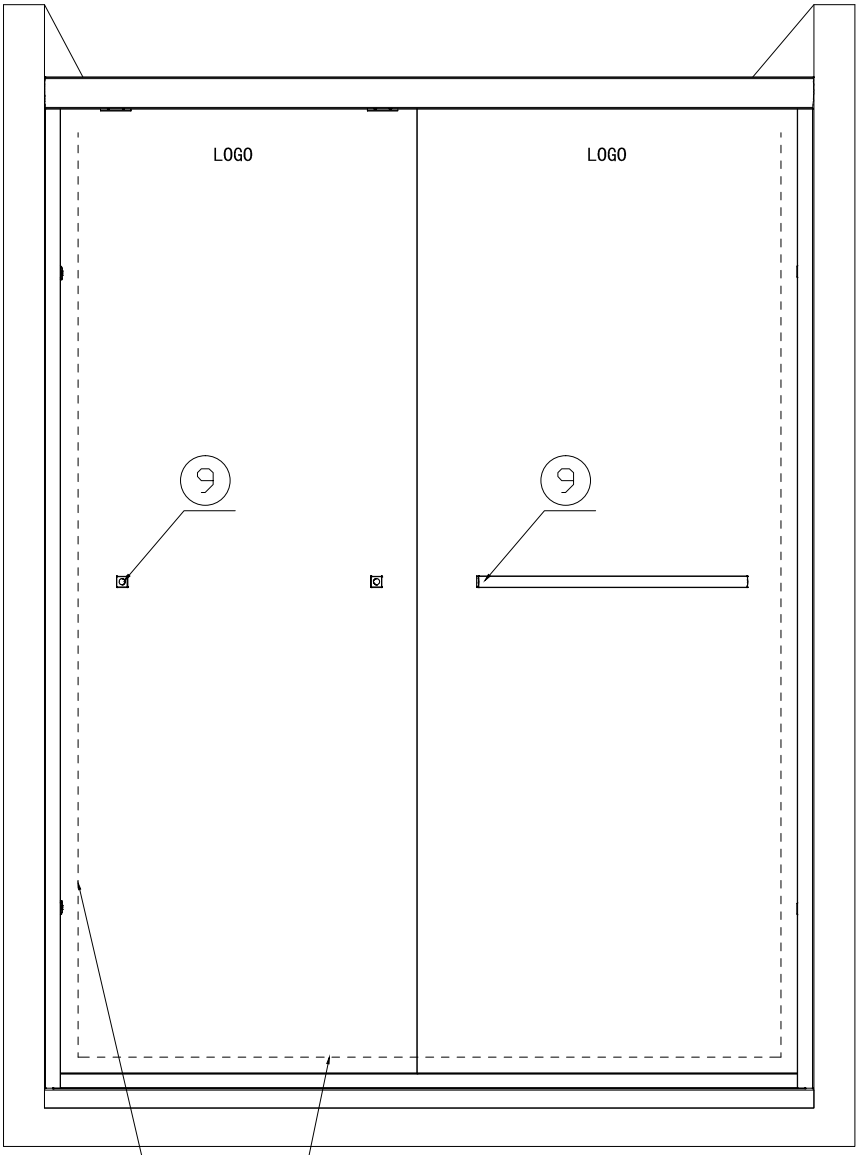

Apply silicone sealant to the gaps between the wall and the metal frame, and between the metal frame and the floor.

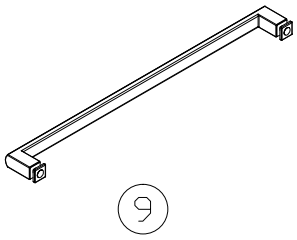

Allow 24 hours for silicone to fully cure before use

