Hardware Package(included)：

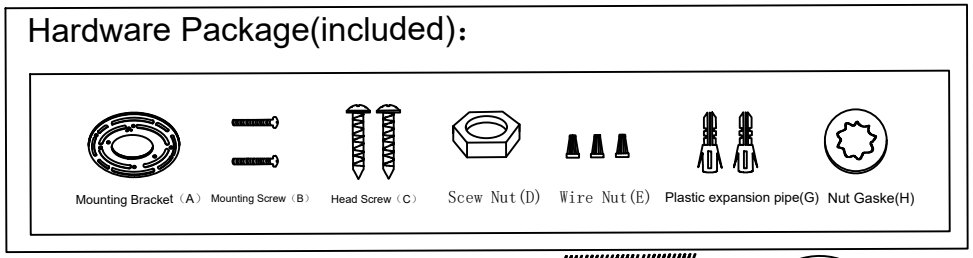

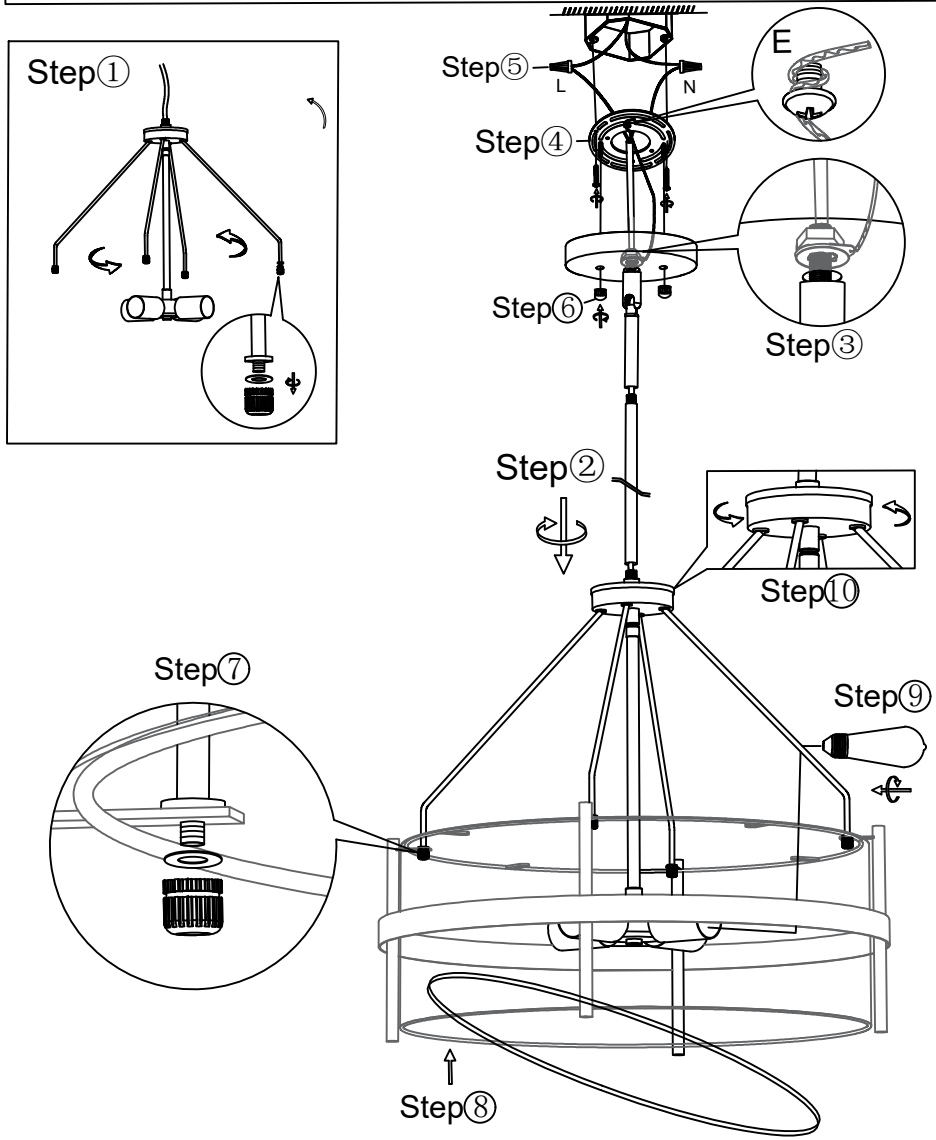

Installation Instructions

WARNING:TO AVOID THE RISK OF ELECTRICAL SHOCK, BE SURE TO SHUT OFF THE POWER BEFORE INSTALLING OR SERVICING THIS FIXTURE.

Before installation, consult your local electrical codes for wiring and grounding requirements.

READ AND SAVE THESE INSTRUCTIONS.

Installation Steps

Turn off the power at the fuse box or circuit breaker before starting installation.

Fixture Body Assembly

Check that all accessories are included.

Please follow the steps below and refer to the schematic diagram and hardware package diagram for installation.

Installation Steps

Step 1: Unfold all support rods, then take off the decorative nut and silicone gasket from each rod’s bottom and set them aside.

Step 2: Mount the suspension boom. Measure your desired hanging height beforehand to confirm the proper assembled length of suspension arms.

Step 3: Attach ceiling canopy to the universal joint. Remove nuts and washers from the joint, feed fixture wires through the canopy, fit ground wire and washer, then fasten loosely with a nut.

Step 4: Secure the mounting bracket to ceiling junction box using plastic expansion pipes and head screws.

Step 5: Complete US standard wiring: Connect black Live(L) and white Neutral(N) wires with wire nuts for full insulation. Wrap bare copper ground wire(E) around the bracket’s green ground screw and tighten firmly with a screwdriver.

Step 6: Fasten the ceiling canopy flush against ceiling with textured decorative lock nut.

Step 7: Attach support rods to the lamp frame. Refit the reserved silicone gaskets and decorative nuts to lock each rod in place.

Step 8: Tilt the round acrylic diffuser panel and slide it into the inner groove of fabric lampshade. Lightly press the panel down from above to flatten and center it; adjust position as required.

Step 9: Install light bulbs. Bulbs are not included. This fixture uses standard E26 sockets with a 60W maximum wattage per socket. Never use bulbs exceeding the rated wattage.

Step 10: Check fixture balance after full assembly. If uneven, hold one support rod steady while rotating its bottom sleeve slightly to level the lamp.

Important Notes

1.Installation must be performed by a licensed electrician.

2.**Color Variation:** Due to differences in display settings, the actual color may vary slightly from the product image.

3. **Size Tolerance:** Manual measurements may vary by up to ±1/2 inch.

4. **Quality Assurance:** If you experience any quality issues, missing parts, or other problems with the product, please contact our customer service team. We will gladly assist you.