DREAMS IDEA

Instruction Manual



DREAMS IDEA

NO.CS0002M

NOTICE

THE PILLOWS ARE FILLED WITH CUT SPONGE,
WHICH IS A PRODUCING TECHNIQUE.

WE PROMISE THAT ALL RAW MATERIALS

USED ARE BRAND NEW, SAFE TO USE,

AND IN ACCORDANCE WITH LAWS AND REGULATION,

WILL NOT EFFECT THE QUALITY AND SAFETY.

WE RECOMMEND ASK FOR PROFESSIONAL HELP IF NEEDED,

AND WE ALSO PROVIDE INSTALLATION VIDEO WITH THIS INSTRUCTION,

PLEASE CHECK THE STEPS CAREFULLY BEFORE YOU START.

IF YOU HAVE ANY QUESTIONS,

PLEASE FEEL FREE TO CONTACT US ANYTIME.

HAVE A GREAT DAY!

ITEM NO.CS0002M

WARRANTY

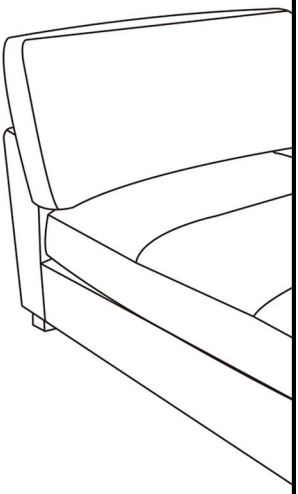

We strive to offer high quality product and we also try our best to satisfy each customer that order from us, no matter on products or services as needed. Each customer receives a record of their order, such as the order number or item receipt. For any items that are out of warranty period, you may still be able to purchase the replacement parts from our company if they are available.

Are you having difficulty
with assembly? Missing parts?
Please contact us : info@firstopintl.com
Tel:(562)-781-3327
send an email with your order No. to us
For return, please check the return policy with the retailer or platforms you bought from.
Appreciate your purchasing from us.
Pop up your life by our furniture !

MAINTAINANCE AND WARNING

Please read the manual thoroughly before you start installing.

Please keep the product away from sharp object.

Packaging and small parts may have chocking hazard, please keep them away from children and pets.

Please clean the product according to each clean code, check the product description for more information.

Please keep the product away from fire.

If you have any other questions, please contact us, we will be glad to help you out.

If the product is placed under direct sunlight, the pattern or color might fade away overtime.

Check the product periodically to make sure everything is secured and tightened.

Always use proper tools for installation.

Do not jump on the product.




Two people




Around 35 min

PRDOUCT DESCRIPTION

Apperance: Corduroy fabric and sense of line design, a master work of Mid-Century Modern design.

Comfort: High elastic and density foam, with great resilent coil springs, plus extra softness feeling, such a great time on relaxing on it.

Easy to Take Care: Removable zipper design on sofa covers, take them off and throw in your washing machine, in a moment will be great as new.

Easy Install: All the tools included, instructions and video are also provided, 30 minutes and its good to go.

Even Better: Rollable neck rest feature, we got your neck covered too!

EXPLODED VIEW

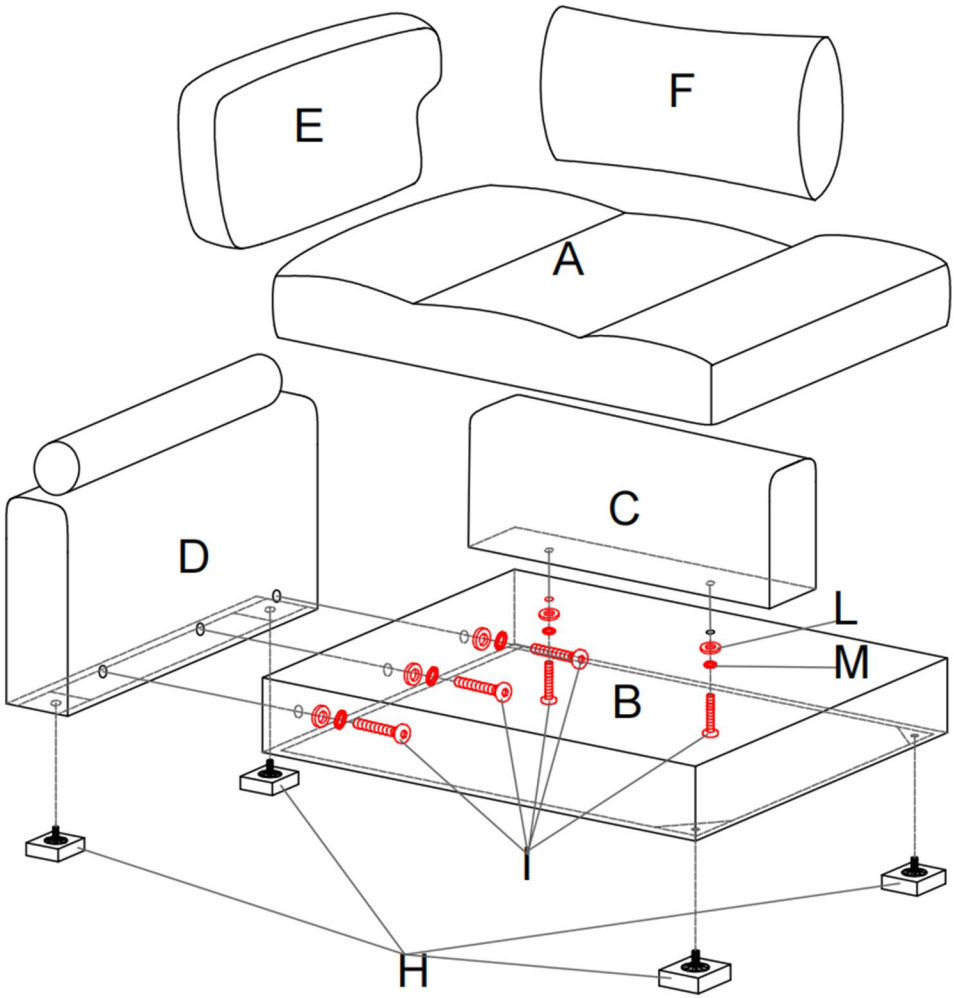

PARTS

A*1

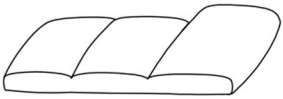

Seat cushion

B*1

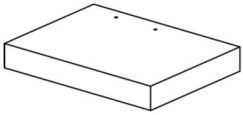

Seat frame

C*1

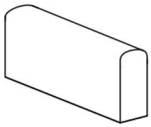

Armrest frame

D*1

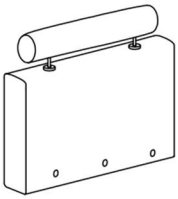

Backrest frame

E*1

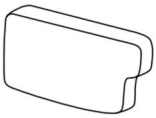

Back cushion

F*1

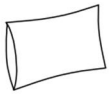

Throw pillow

HARDWARE

TOOL LIST

NOTE: Designated with (★) We provide additional spare parts in the hardware package

H*4

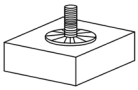

Leg

I*6



★ Screw

J*1



Allen key

O*1

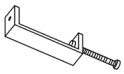

Hook

L*6



★ Flat washer

M*6



★ Spring washer

Please make sure all hardware&packing material fitting the list. Especially some small accessories may be missing during transportation. Please contact us if you have any question.

step 1

Cut the plastic air compression bags, and take out cushions (A) and (E). Place them on the side for recover to their original shape, the whole process might take up to 48 hours, you may gently slap on them to speed up the process.

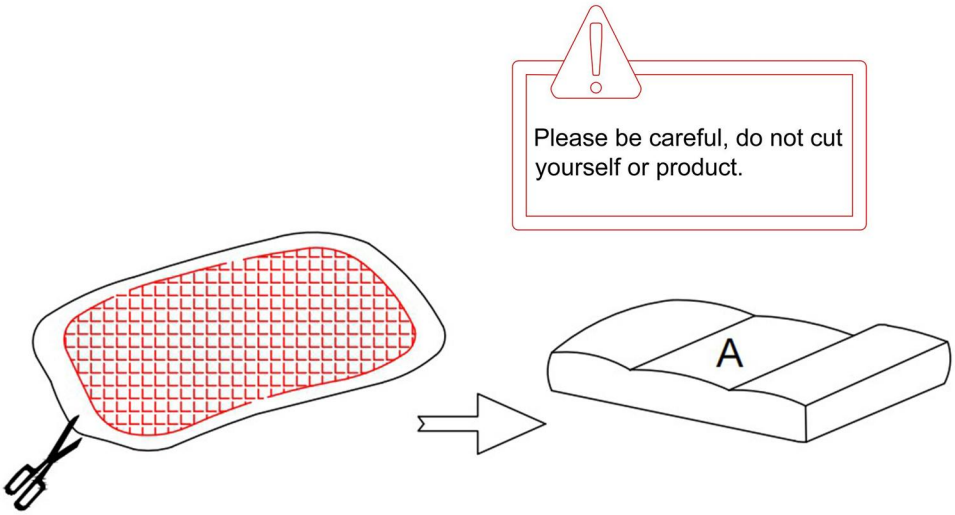

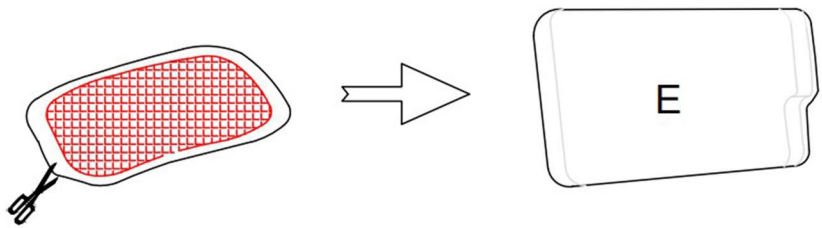

step2

Place the sofa frame (B) on its side as shown, then align the screw holes on the backrest (D) with the holes on the sofa frame. Use the allen wrench (J) provided to tighten each screw with one spring washer (M) and one flat washer (L), make sure they are all correctly aligned before fully tighten the screws.

Notice:
We suggest tightening the bolts for 30-50% first, make sure the process is correct and bolt holes are aligned, then fully tightening them all.

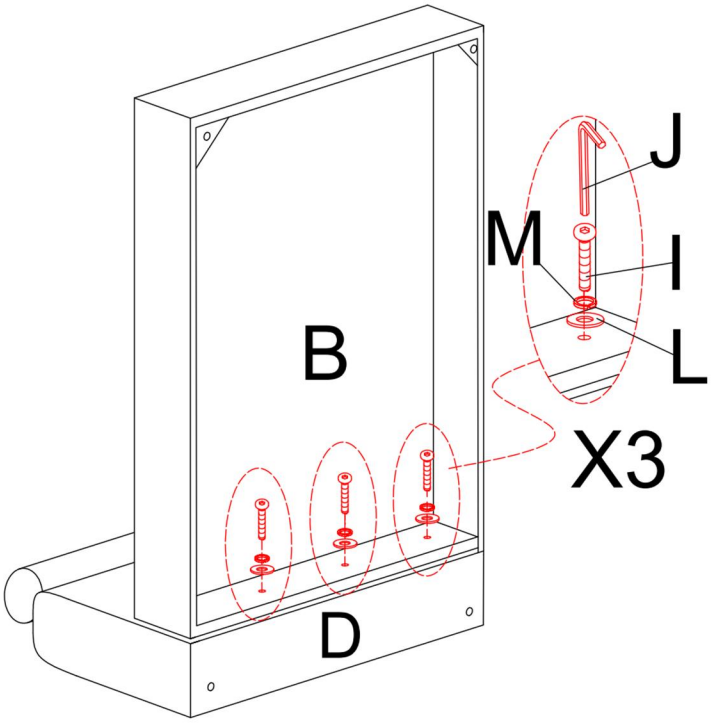

step 3

Align the armrest frame (C) with the holes on the sofa frame (B) as shown, then use the allen wrench (J) provided to tighten each screw with one spring washer (M) and one flat washer (L) from the bottom. Make sure all the screws and holes are correctly aligned before fully tighten.

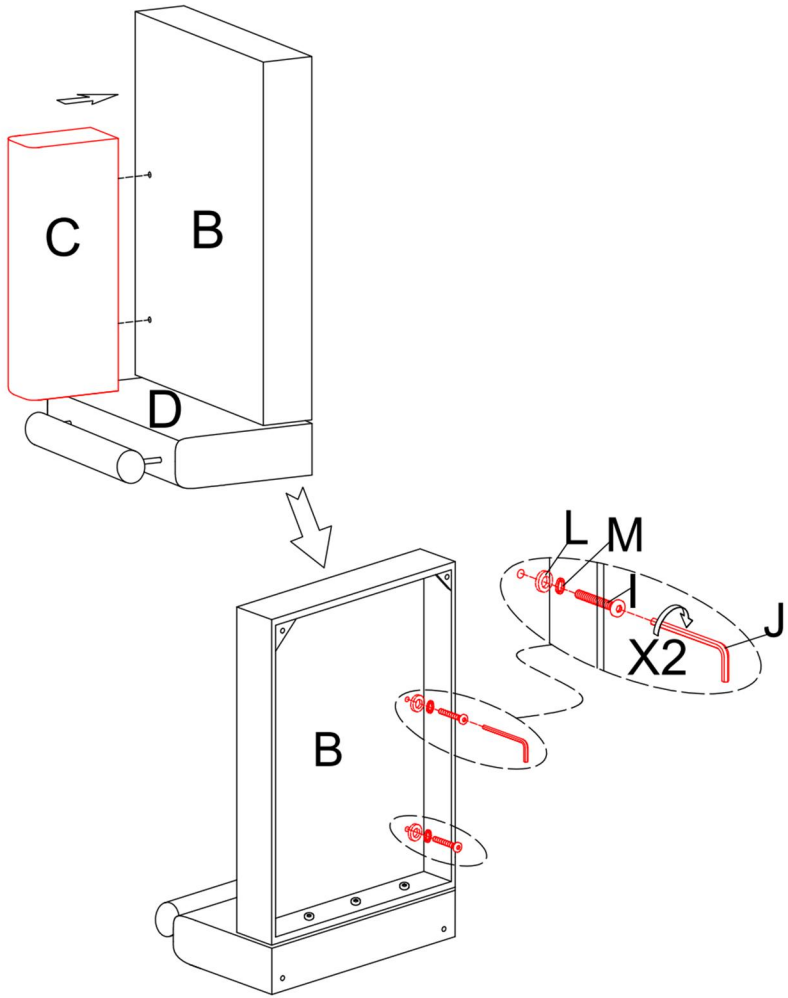

step 4

Remove the plastic caps off the sofa leg screws as shown, then twist in all the legs (H) into each corner of the sofa frame (B), make sure they are all tightened.

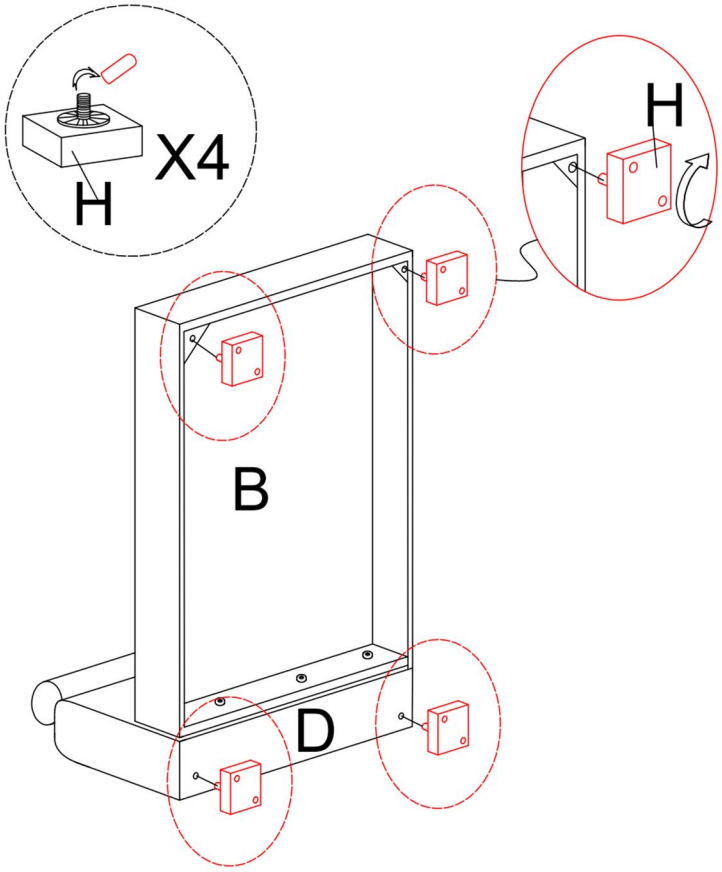

You may place the sofa frame on a carpet or rug in order to protect your floor and the product.

step 5

Place the seat cushion (A) onto the sofa as shown.

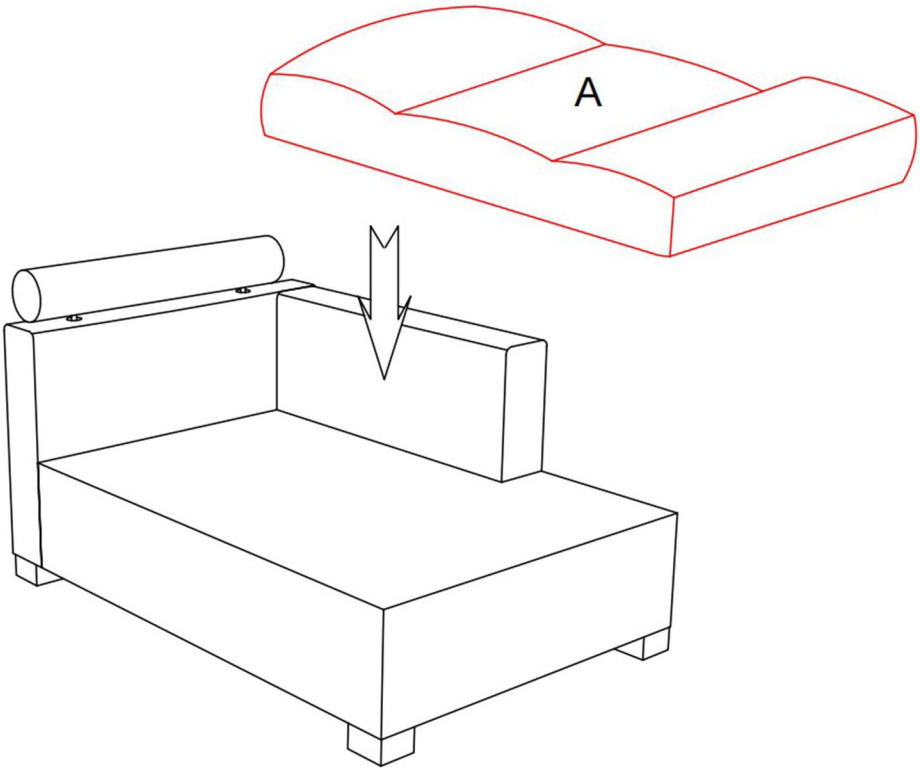

step 6

Place the back cushion (E) and the armrest (F) onto the sofa as shown.

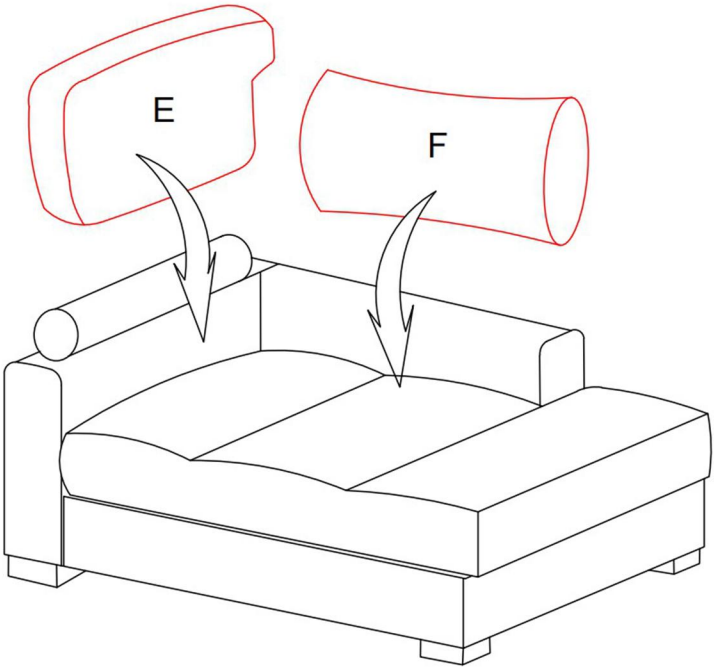

step 7

There is one metal connector inside each package the metal connector is used to connect sectional sofas together, if you are only using one piece of the sectionals, the connectors will not be used during the assembly. if you want to connect sectionals together, please use the connectors before the headrest is inserted.place the sectionals upside down on a clean surface, and bring both of the parts as close as possible, make sure both of the parts are aligned, then fix the connector at 40 cm (about 16 inches) away from the front and back edges, then tighten the connector. after both parts are connected, flip them over and insert the headrest.

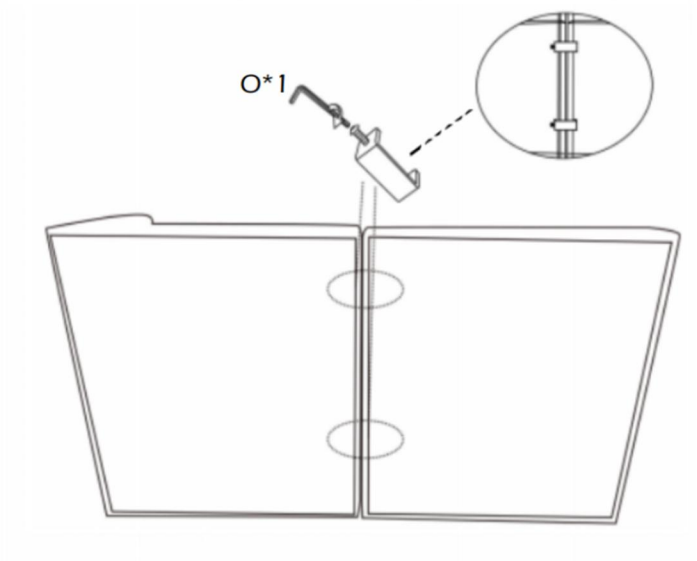

Congradualtions! The assembly has complete! Thank you again for choosing our product, please enjoy!



DREAMSIDEA, IDEAL HOME DECOR

ASSEMBLY INSTRUCTIONS

Tel. (562)-781-3327

Contact us at: info@firstopintl.com

Check out: https://www.dreamsidea.com