ASSEMBLY INSTRUCTIONS

1340040

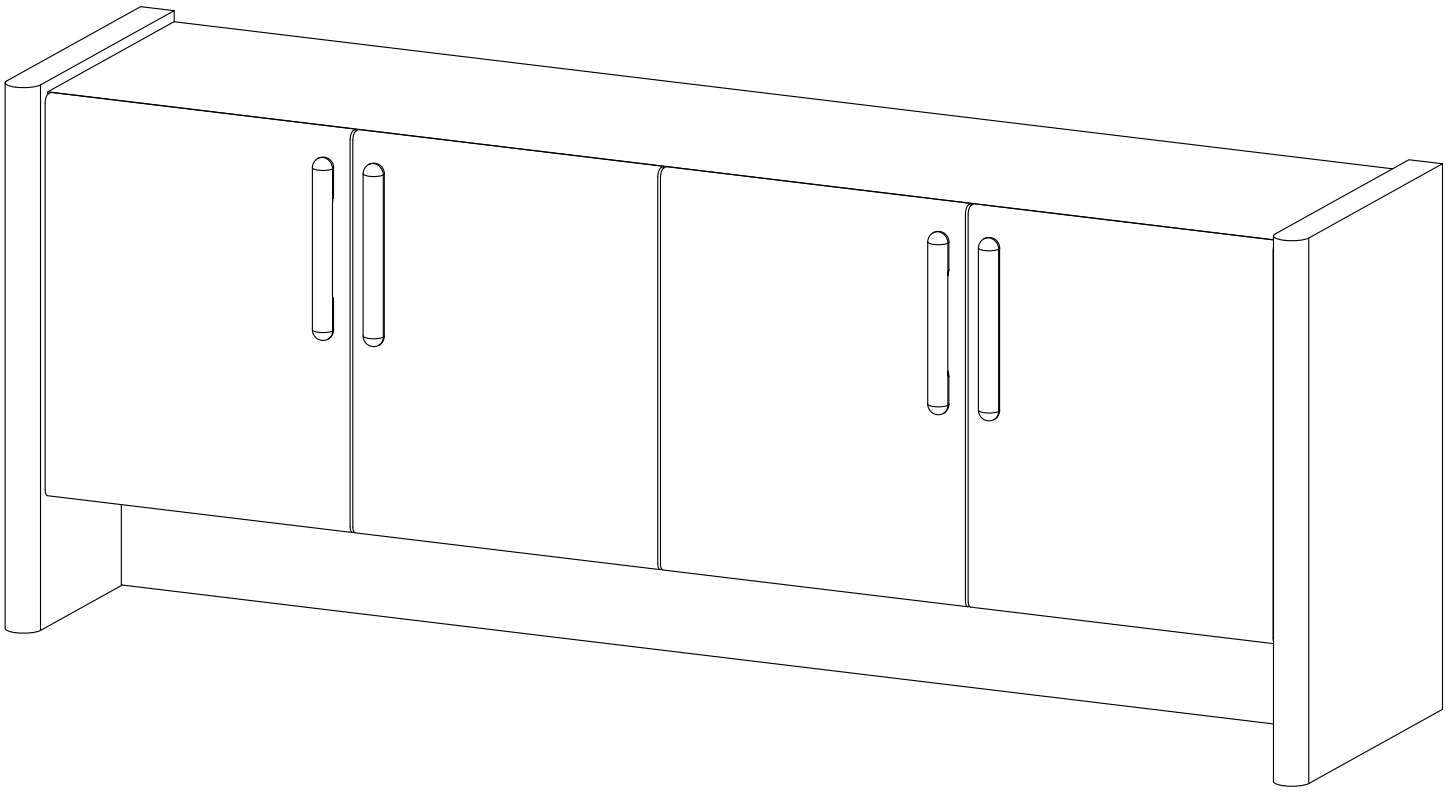

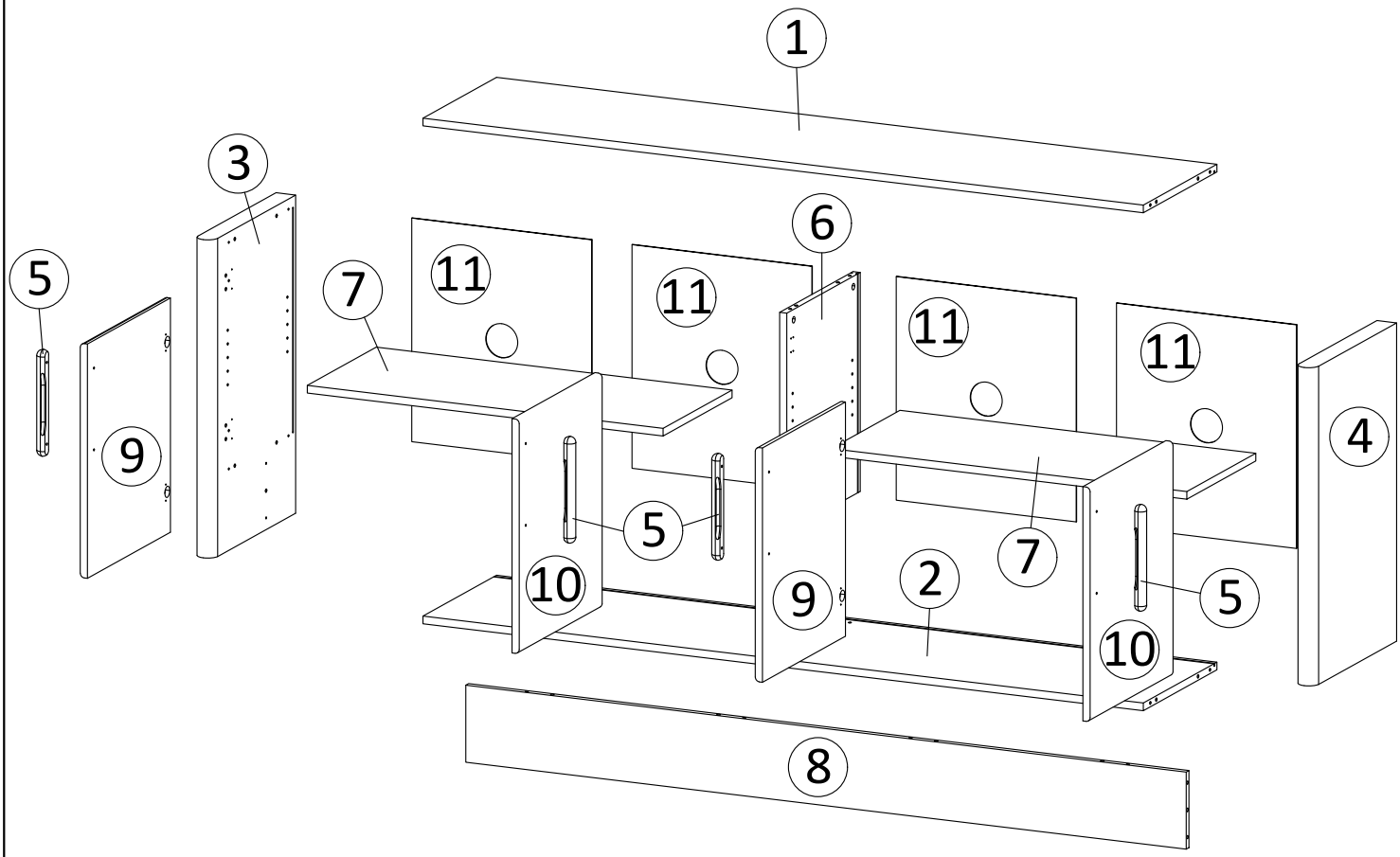
1
3
6
5
7
11
11
11
11
9
4
5
7
10
9
2
5
10
8

Hardware

A x 18	B x 18	C x 18	D x 2
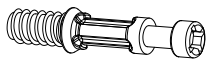 Ø6 x 35 mm	Ø15 mm	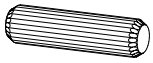 Ø8 x 30 mm	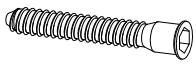 M 7 x 50 mm
E x 2	F x 3	G x 4	H x 56
		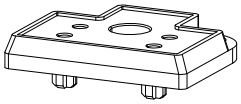	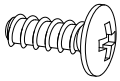 M 4.5 x 12.5 mm
I x 4	J x 8	K x 20	L x 20
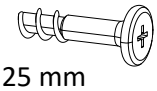 M 6.4 x 25 mm	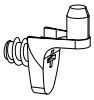		M 3.5 x 15.5 mm
M x 2	N x 8	O x 2	P x 4
L 4	M 4 x 25 mm	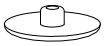 Ø15 mm	
Q x 1	HS26B x 8		
	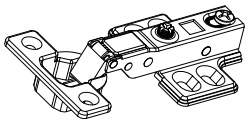		

SET-UP TIME : 60 MINUTES	**NUMBER OF PERSONS :** 02	**TOOLS :** 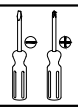

1

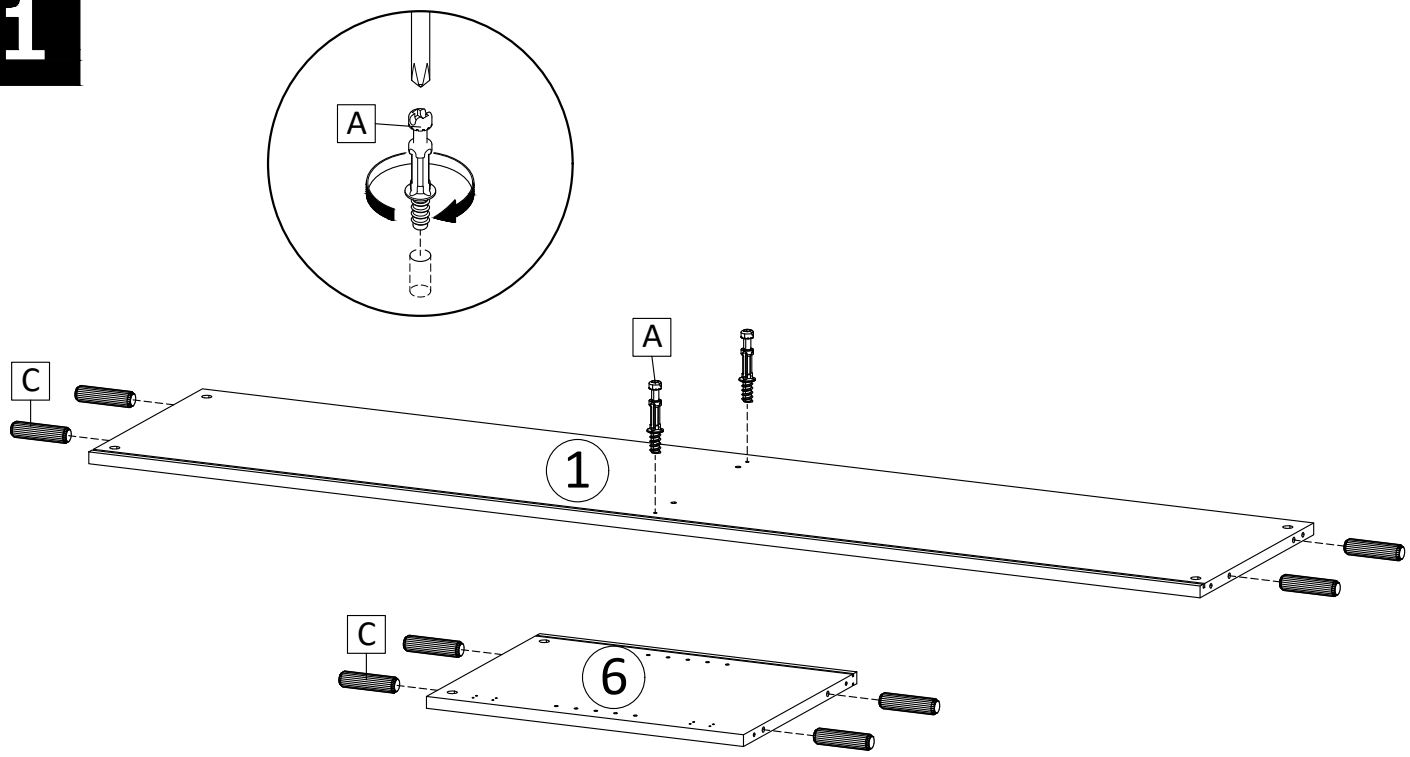

A	x 2
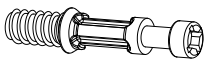 Ø6 x 35 mm	

C	x 8
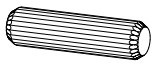 Ø8 x 30 mm	

2

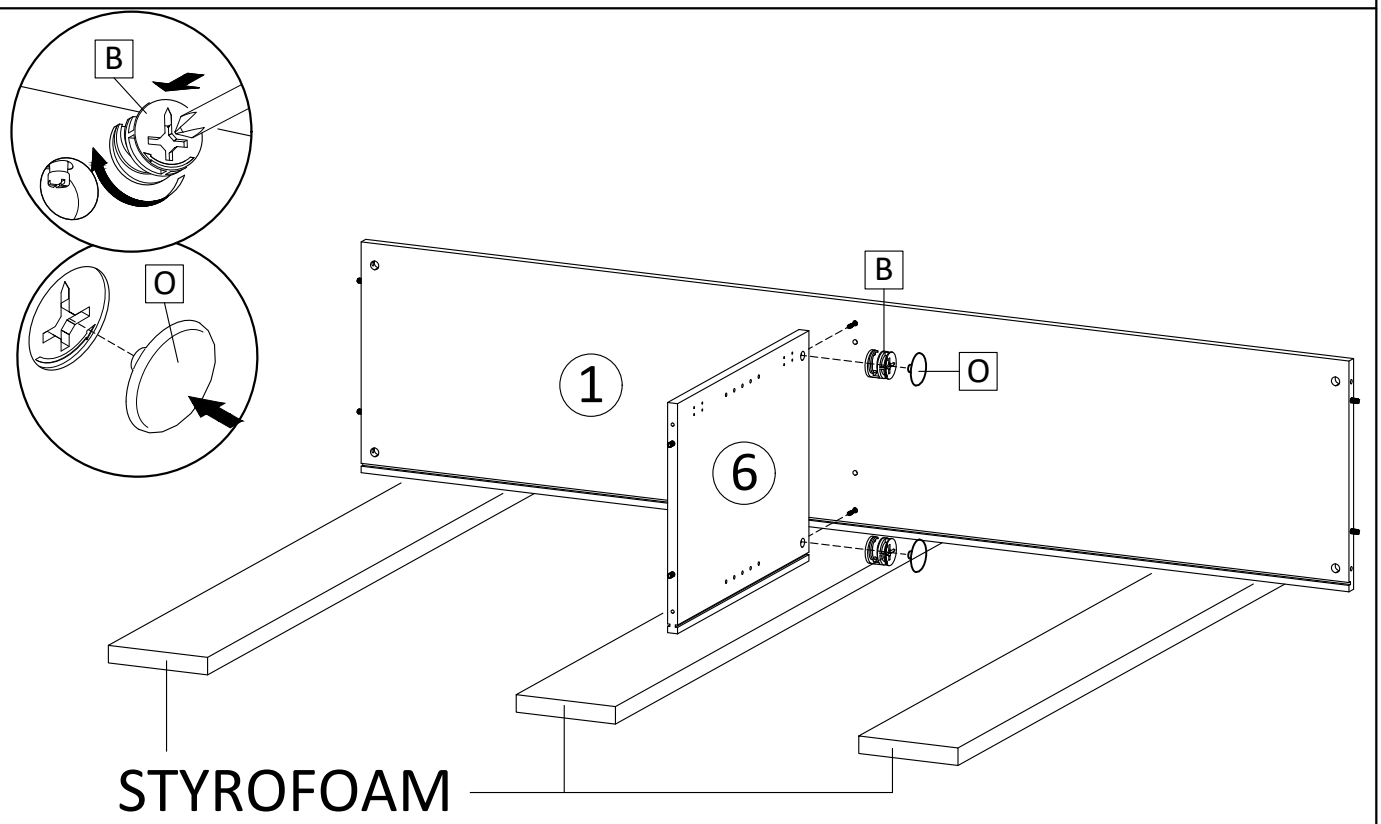

B	x 2
Ø15 mm	

O	x 2
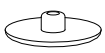 Ø15 mm	

3

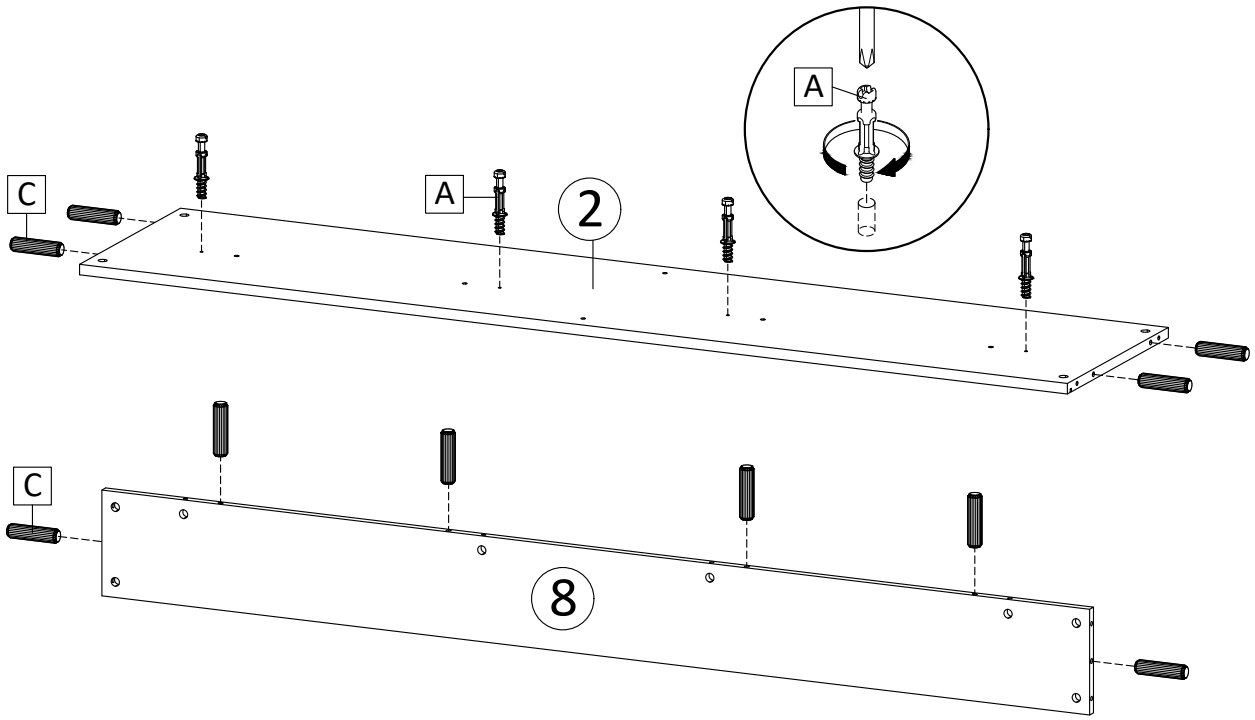

A	x 4
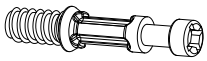 Ø6 x 35 mm	

C	x 10
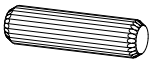 Ø8 x 30 mm	

4

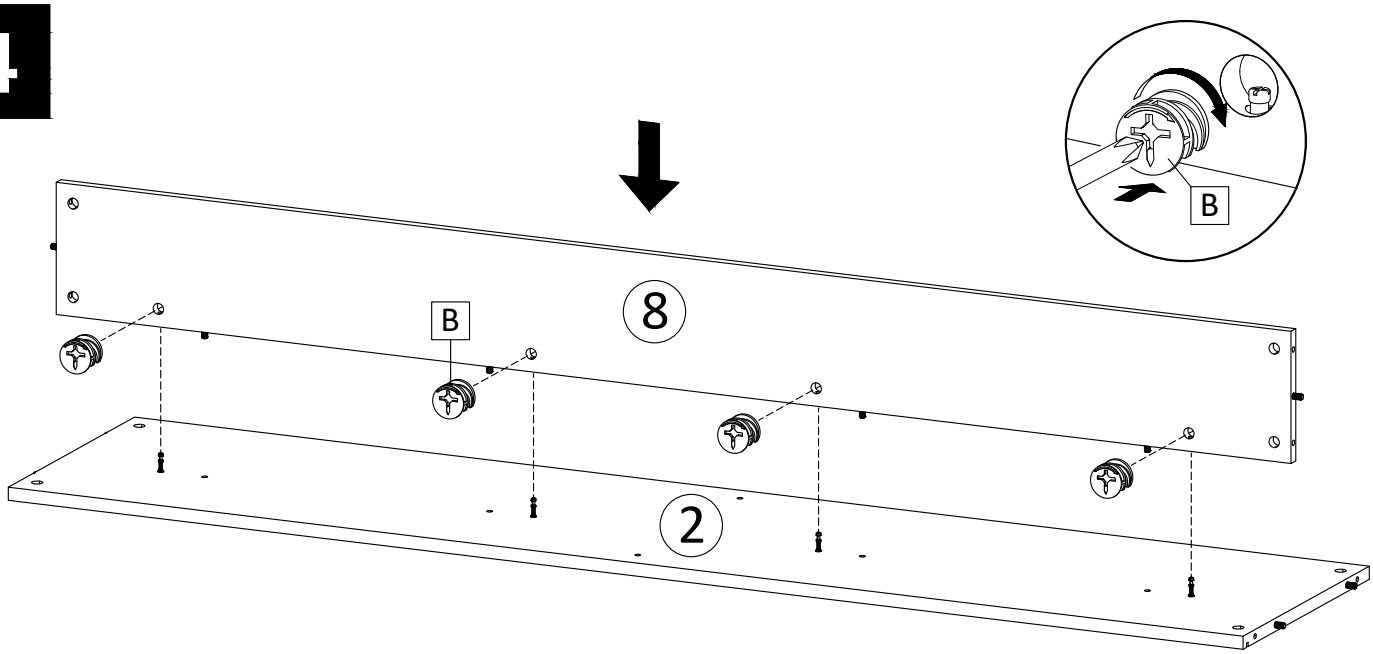

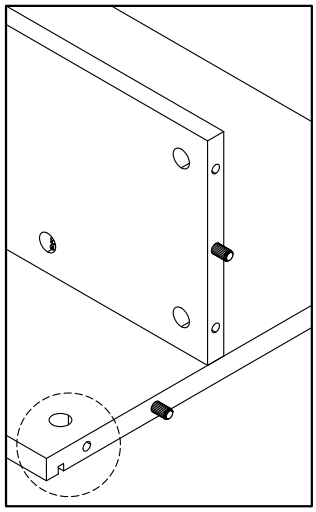

B	x 4
Ø15 mm	

5

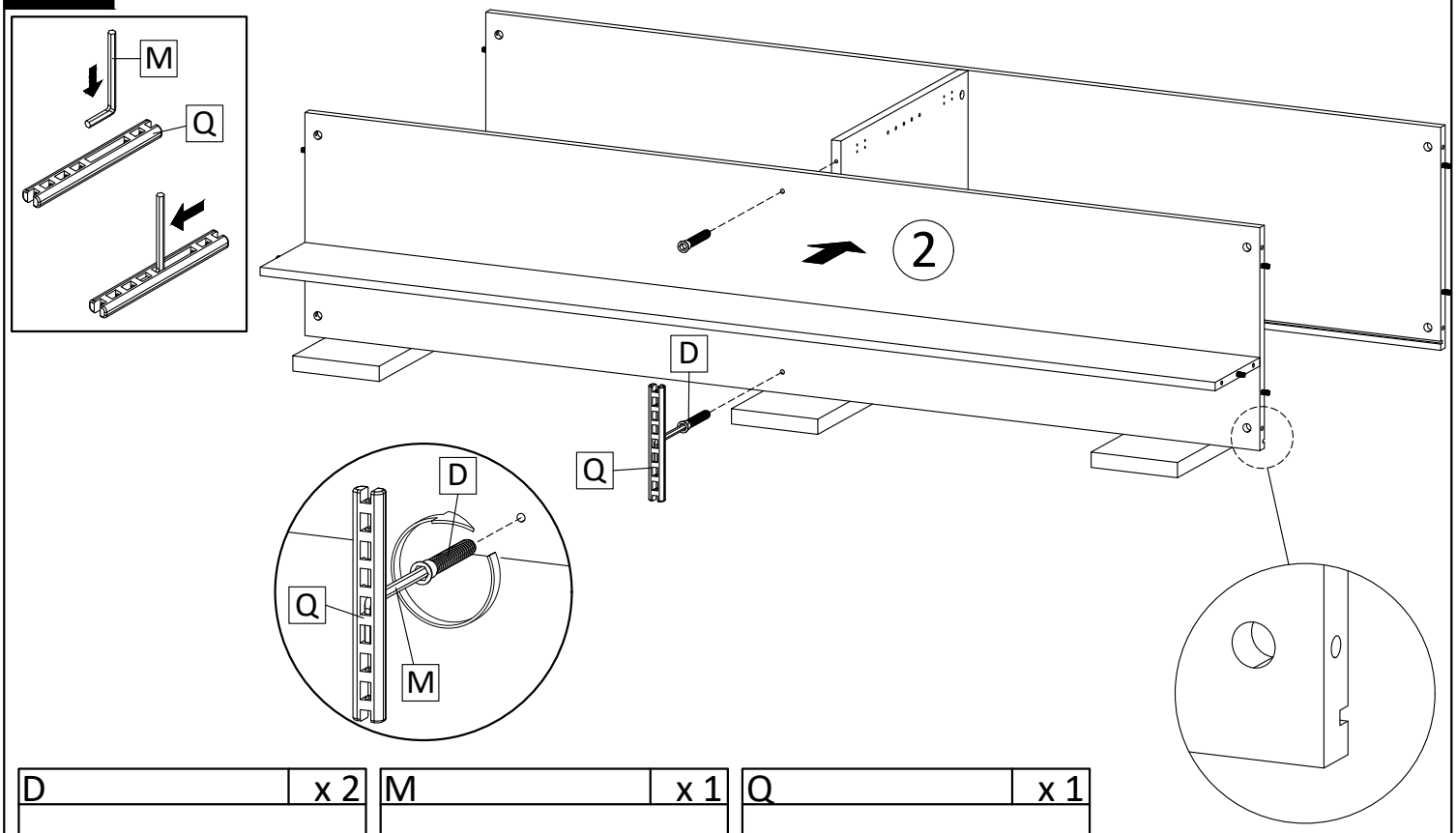

D	x 2
M 7 x 50 mm	

M	x 1
L 4	

Q	x 1

6

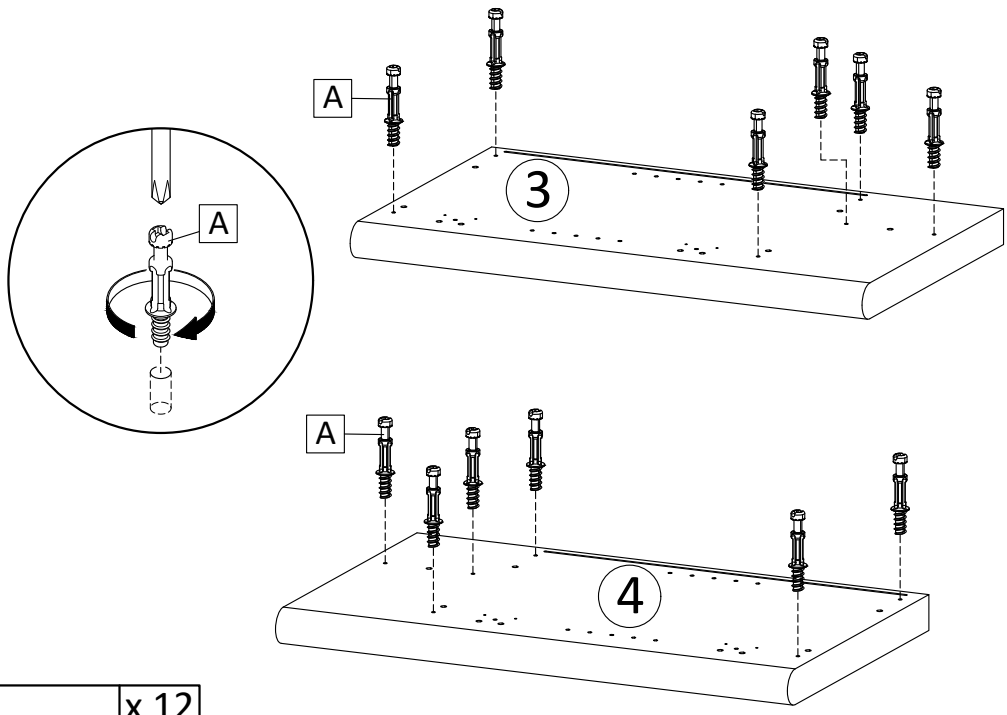

A	x 12
Ø6 x 35 mm	

7

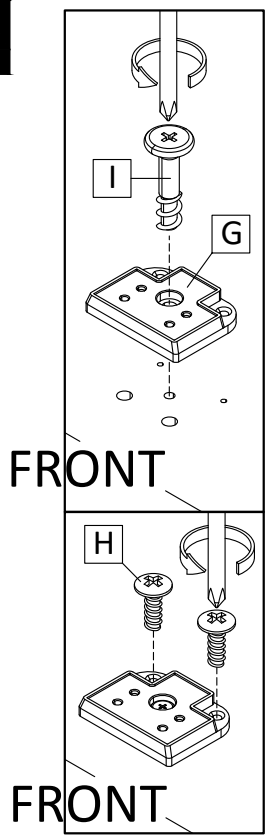

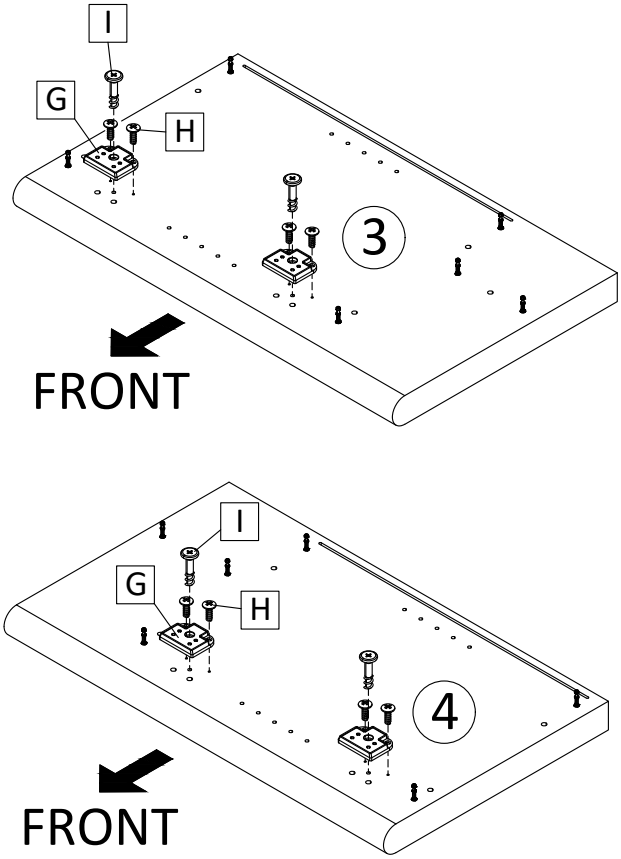

G	x 4
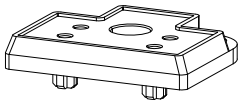	

H	x 8
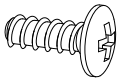 M 4.5 x 12.5 mm	

I	x 4
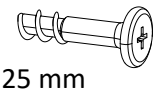 M 6.4 x 25 mm	

8

1

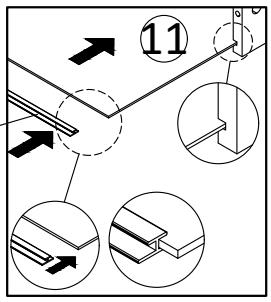

2

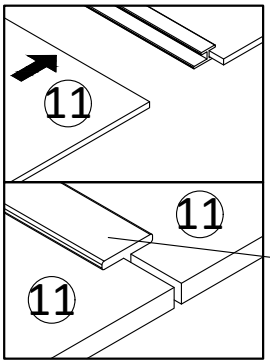

Laminated

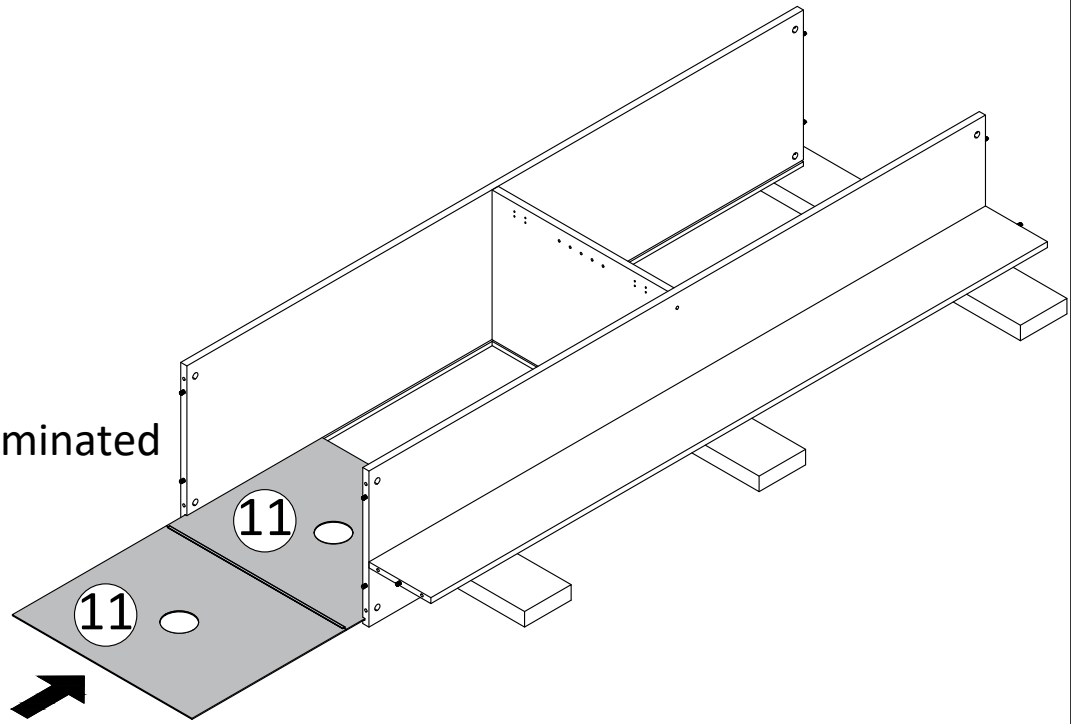

E	x 1

9

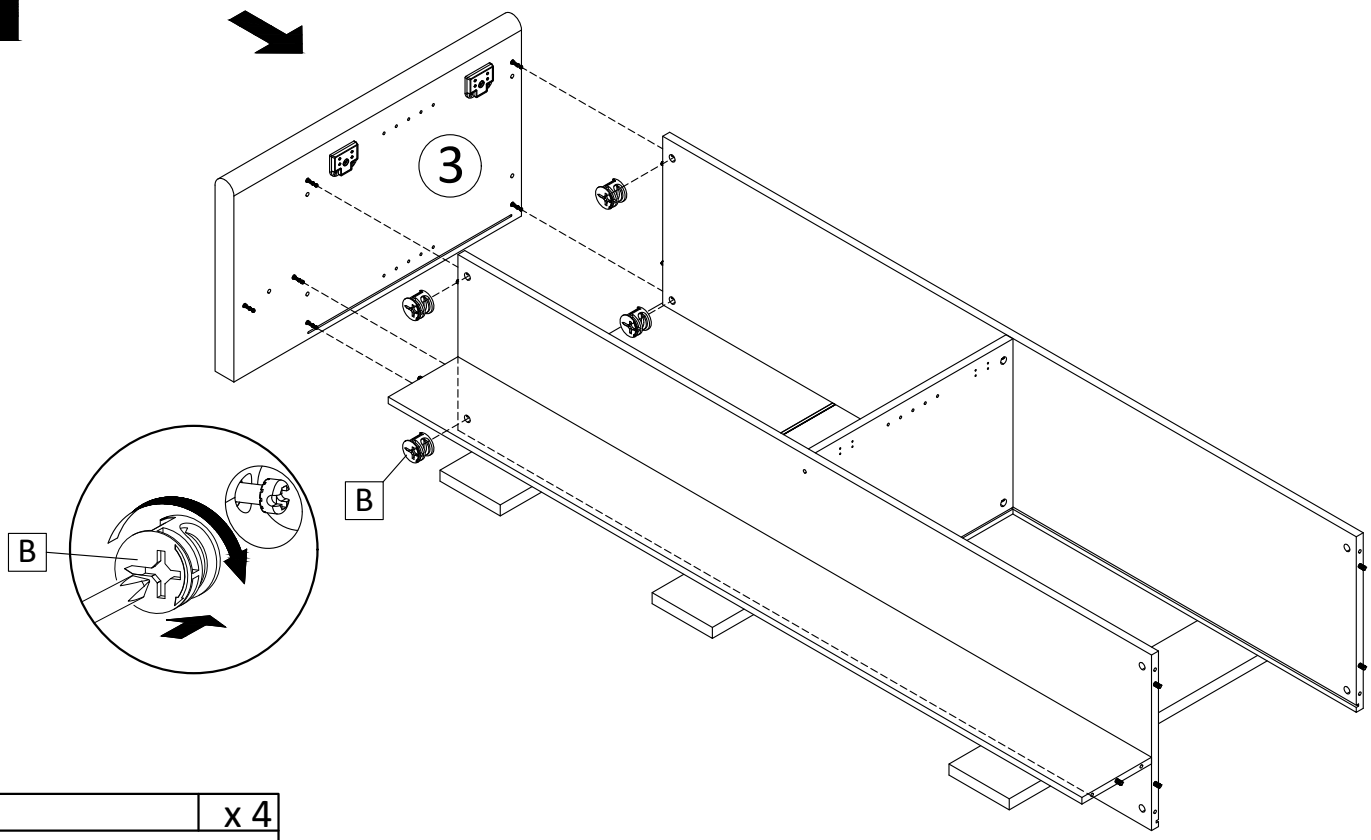

B	x 4
Ø15 mm	

10

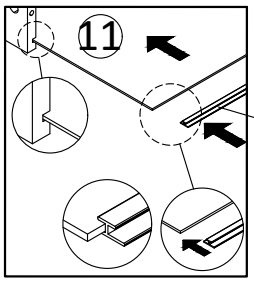

1

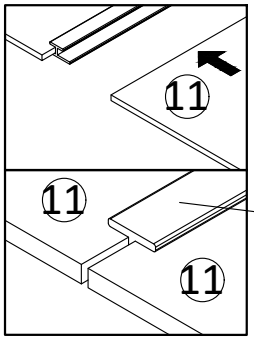

2

Laminated

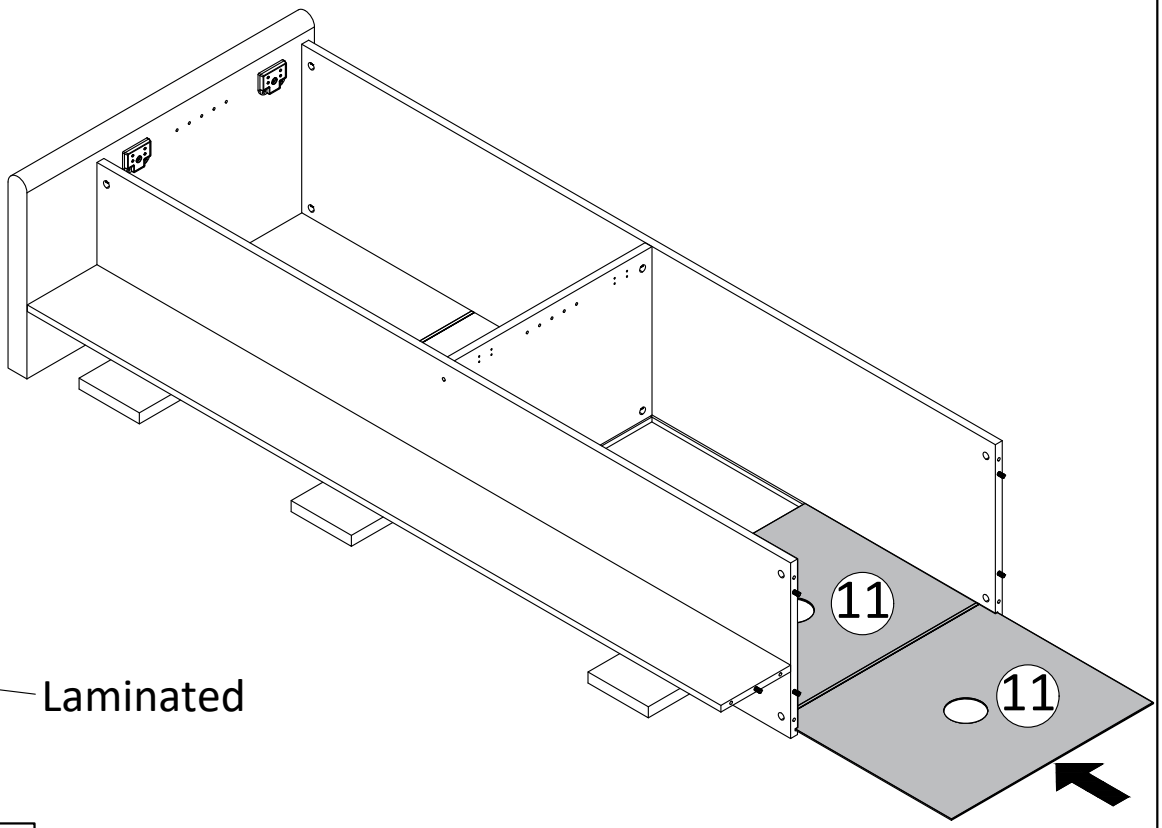

E	x 1

11

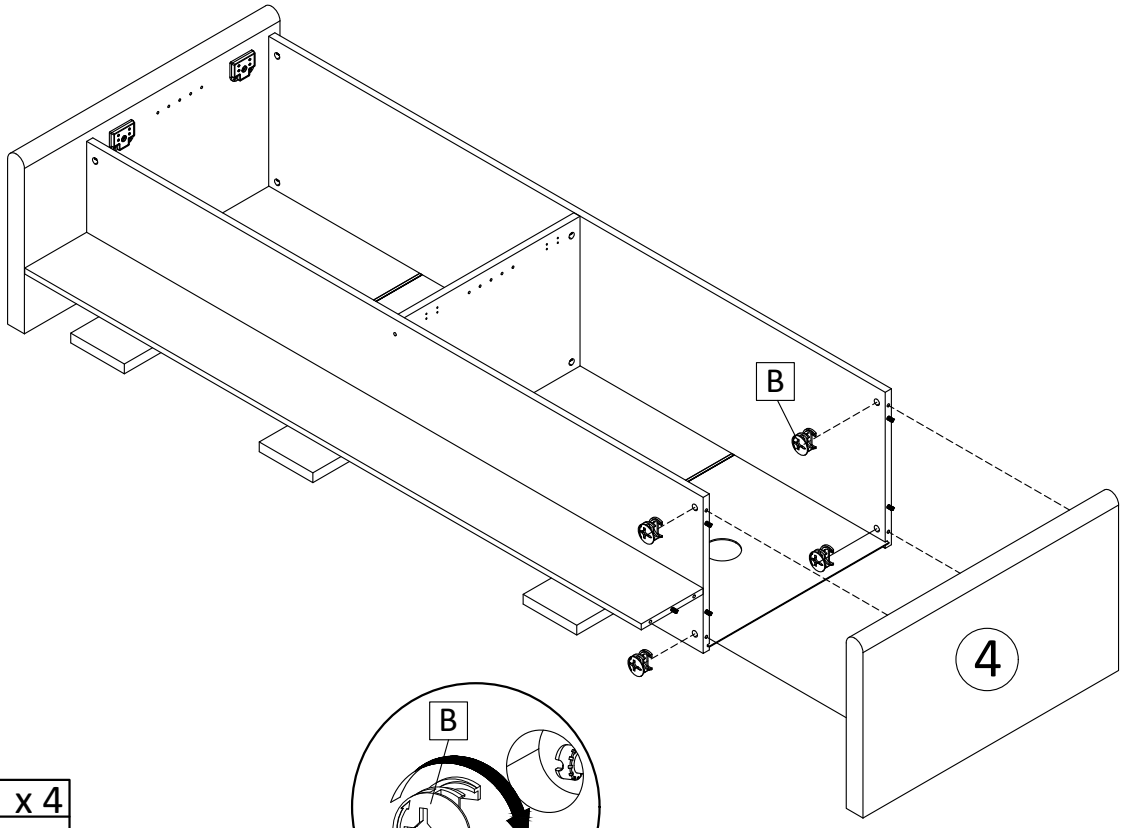

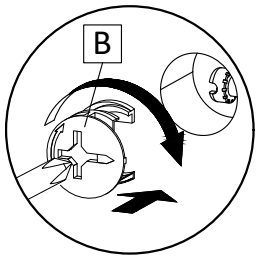

B	x 4
Ø15 mm	

12

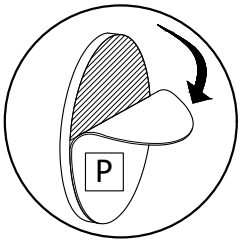

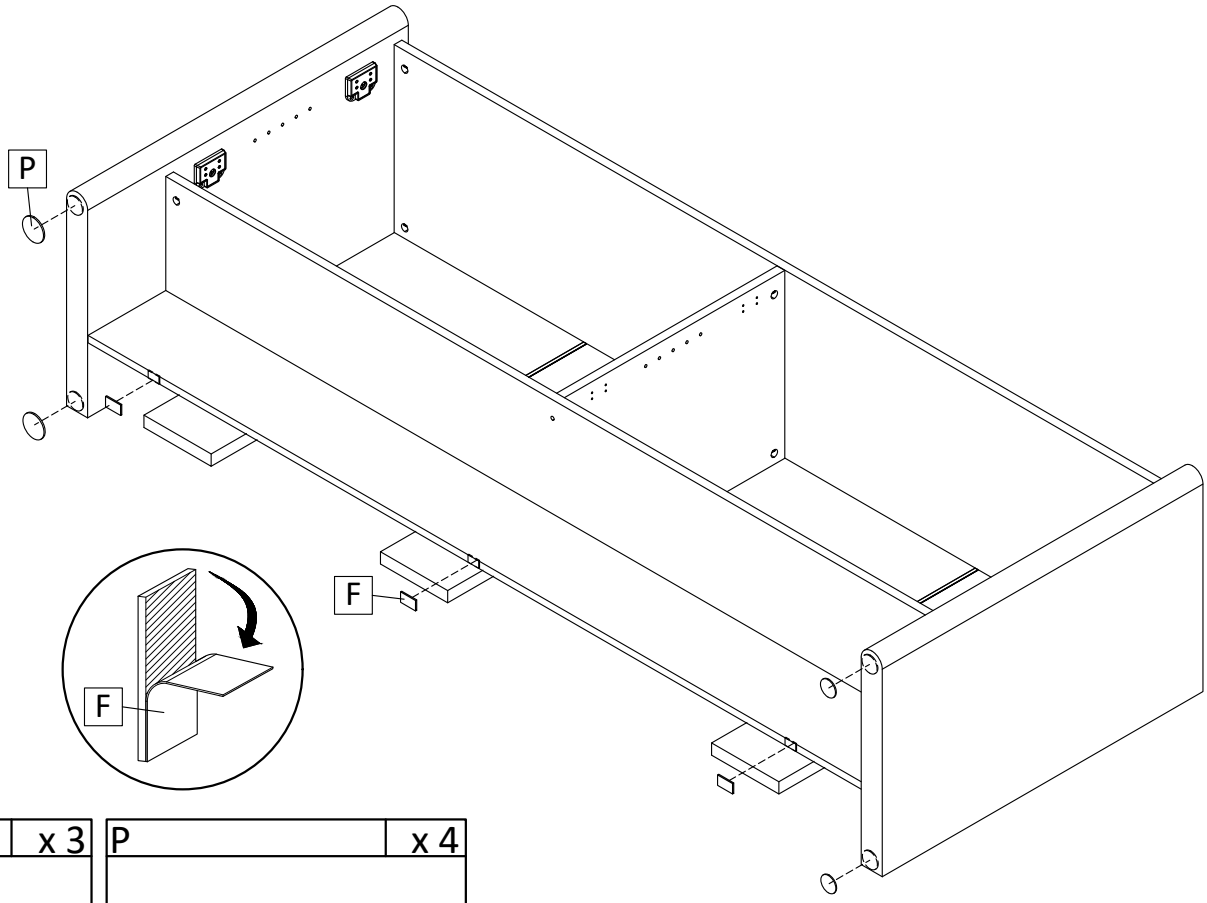

F	x 3

P	x 4

13

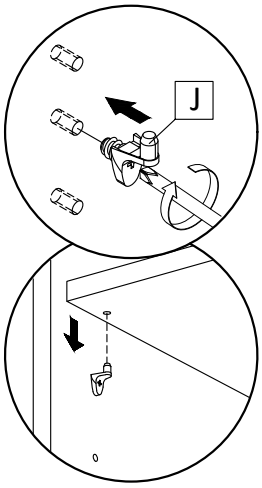

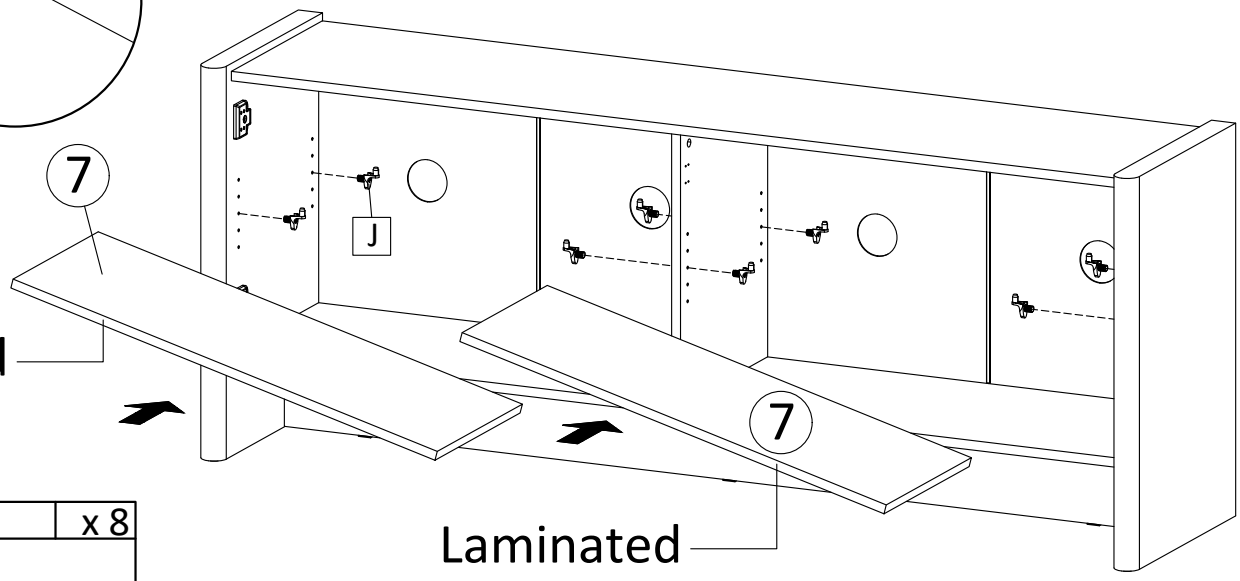

J	x 8
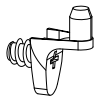	

14

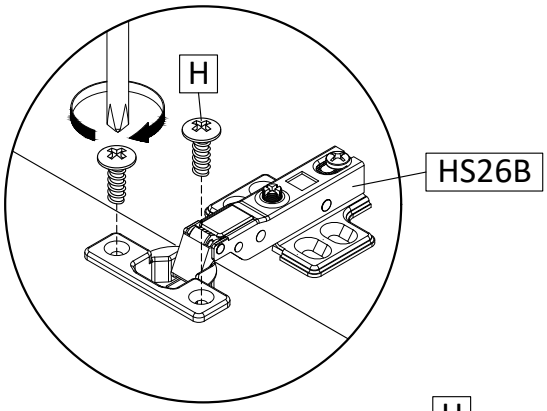

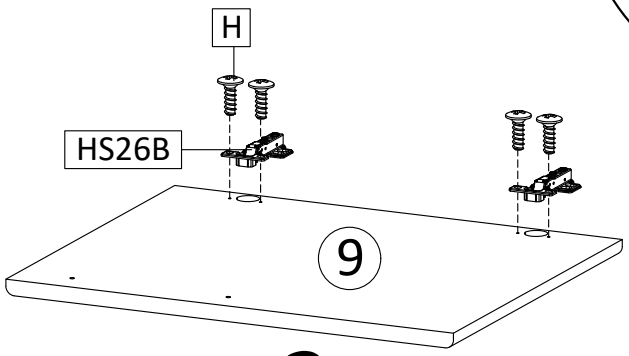

x 2

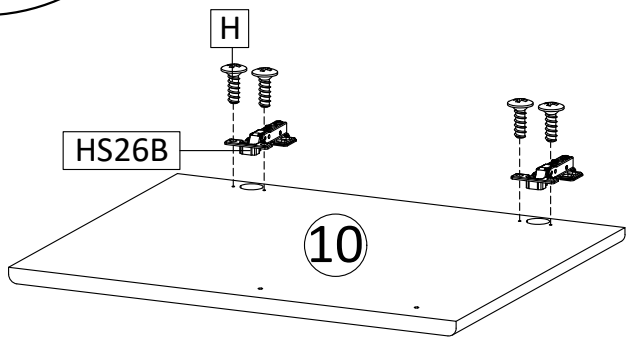

x 2

H	x 16
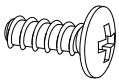 M 4.5 x 12.5 mm	

HS26B	x 8
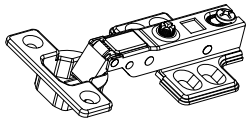	

15

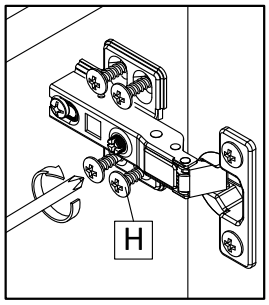

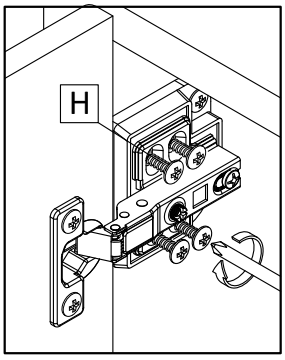

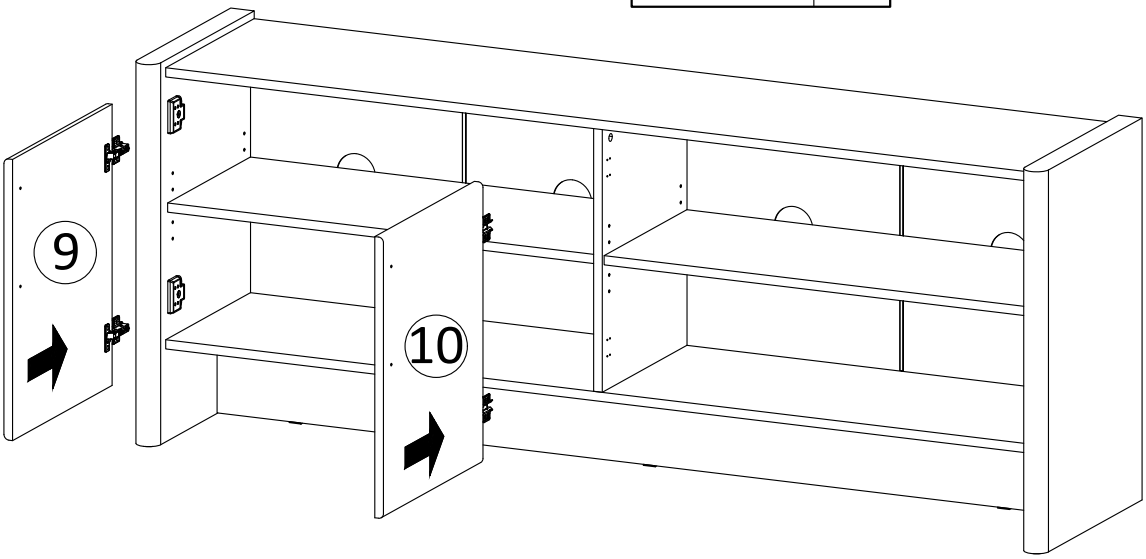

H	x 16
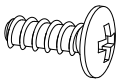 M 4.5 x 12.5 mm	

16

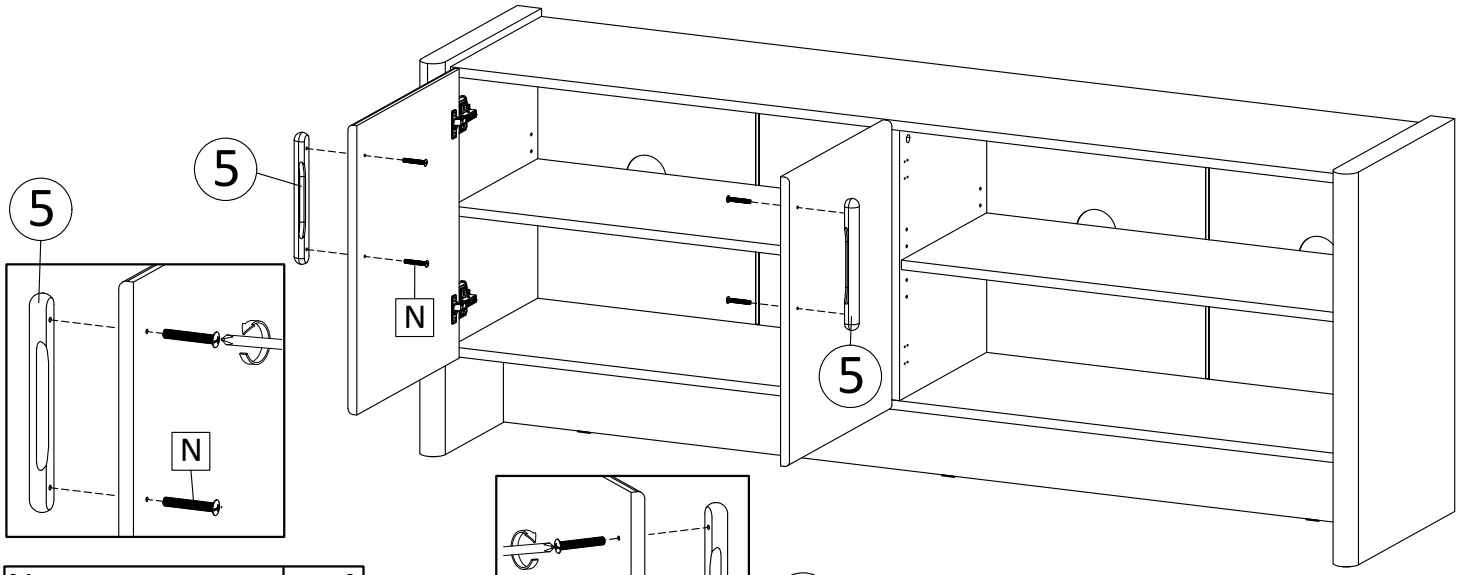

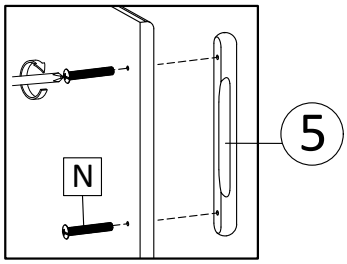

N	x 4
M 4 x 25 mm	

17

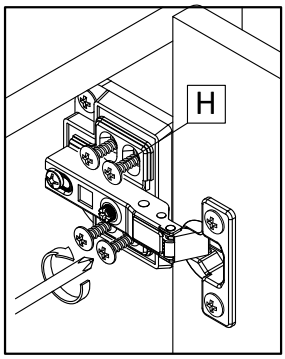

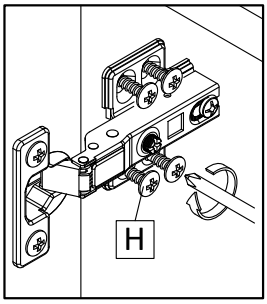

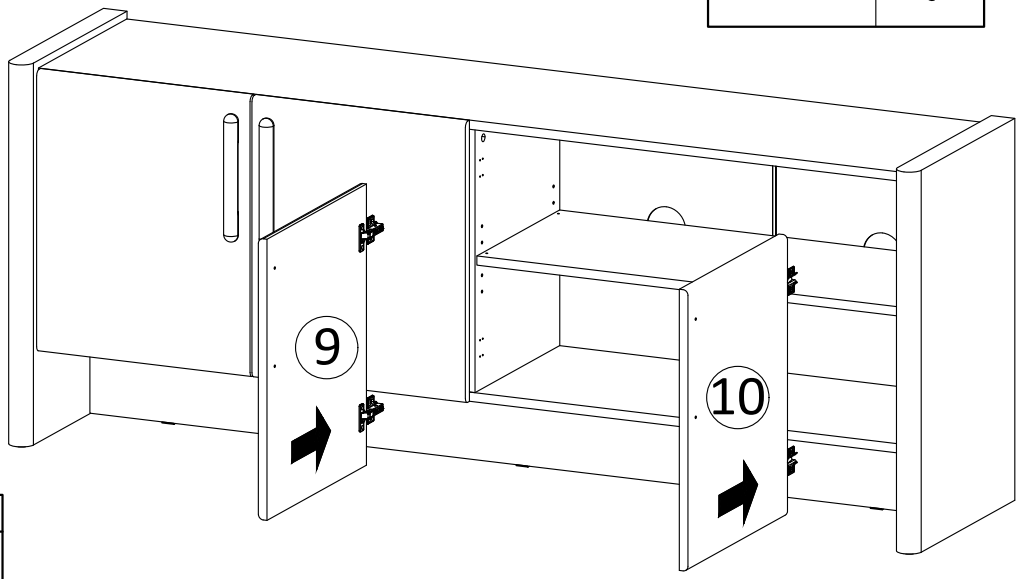

H	x 16
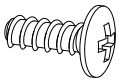 M 4.5 x 12.5 mm	

18

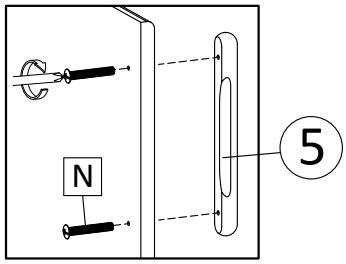

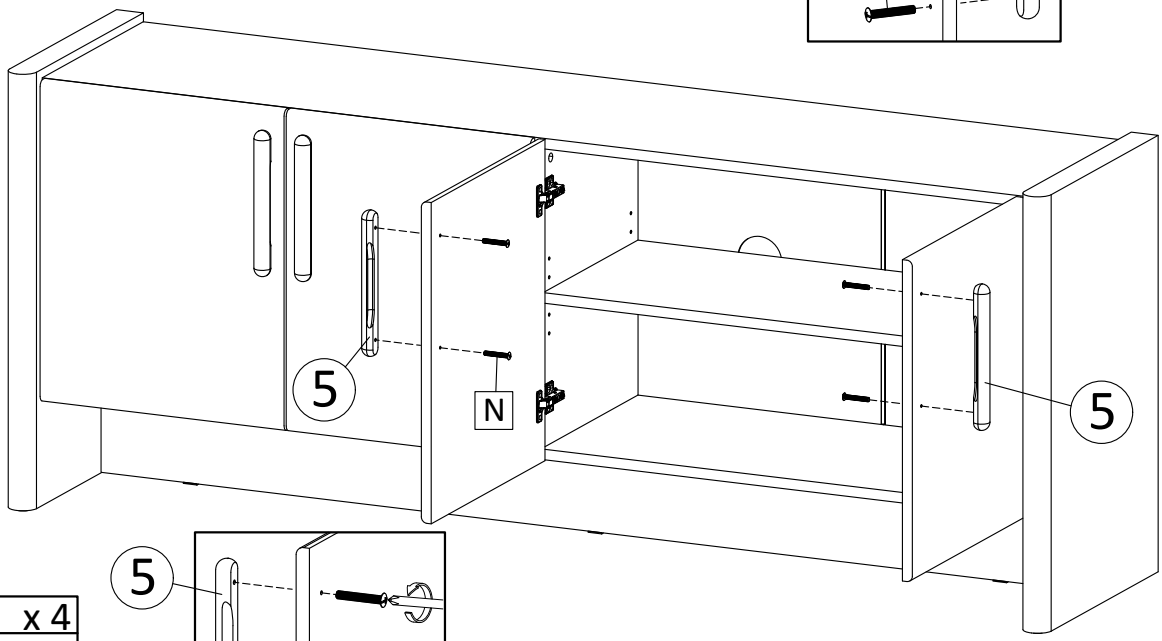

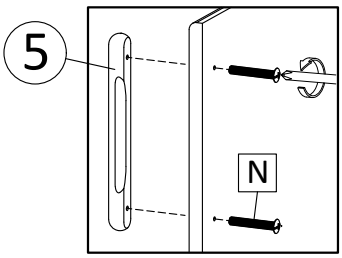

N	x 4
M 4 x 25 mm	

19

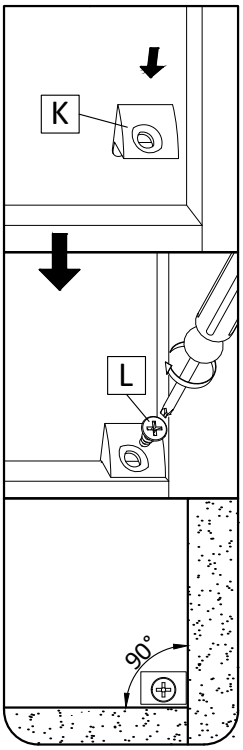

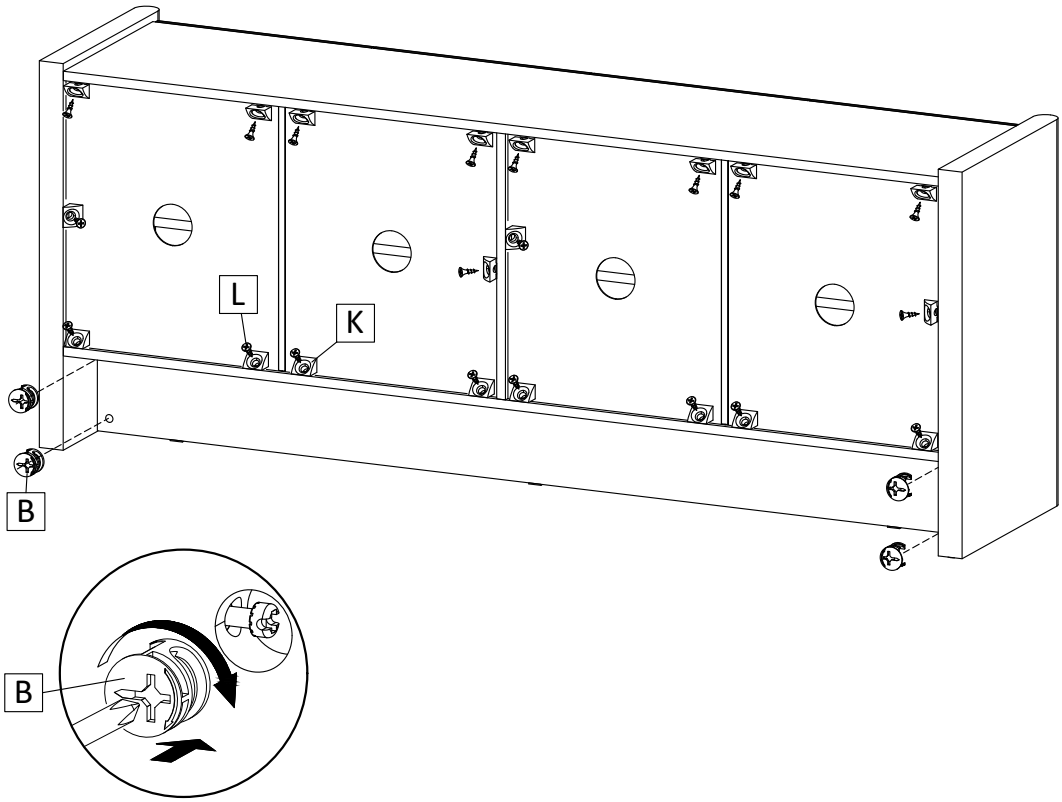

B	x 4
Ø15 mm	

K	x 20

L	x 20
M 3.5 x 15.5 mm	

20

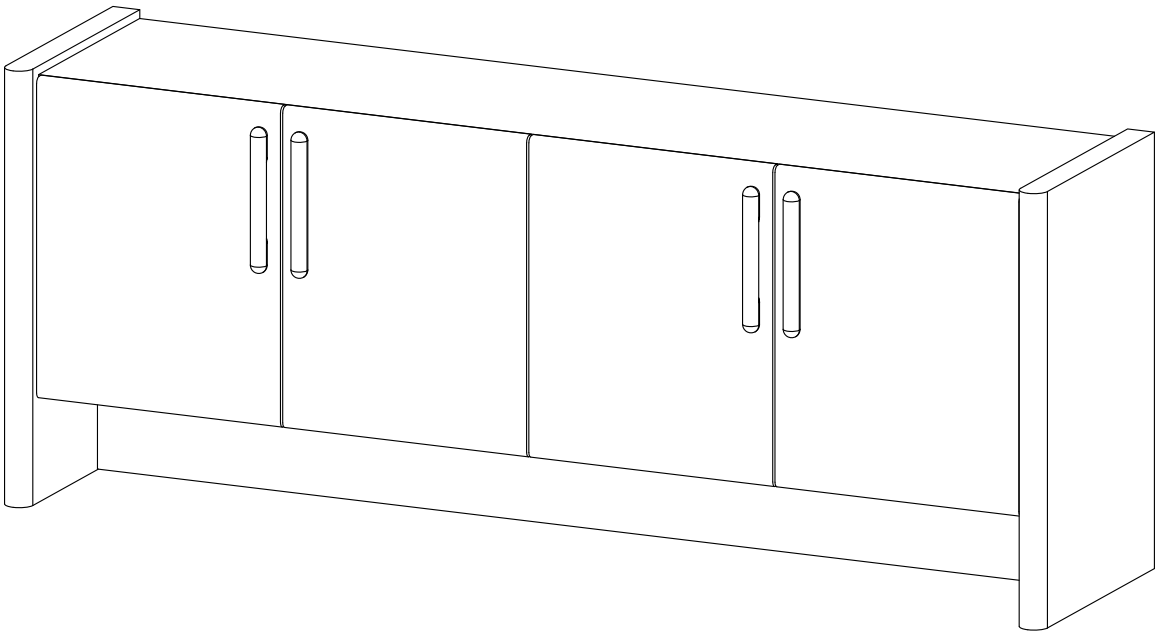

Cabinet Door Alignment

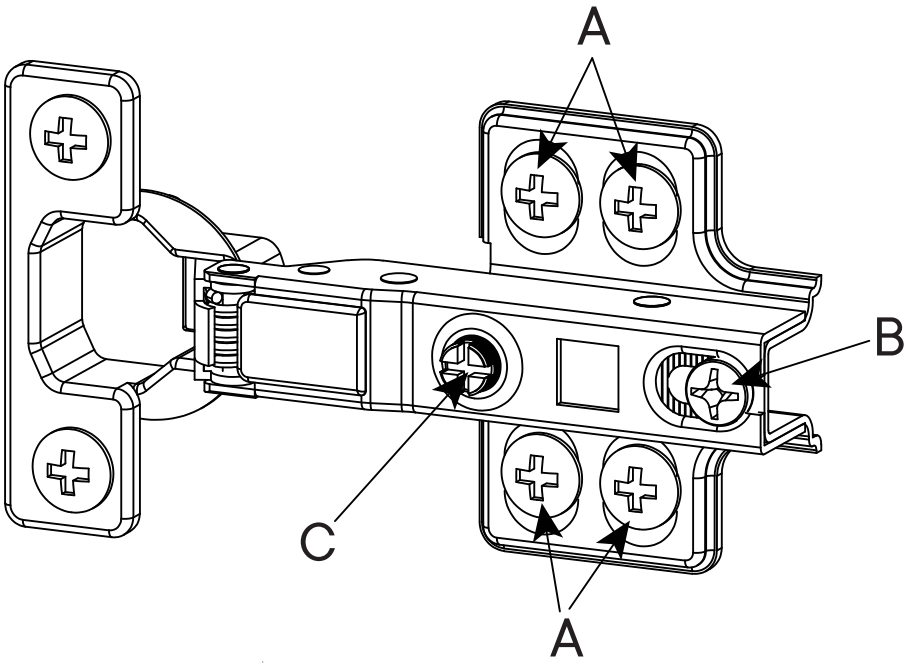

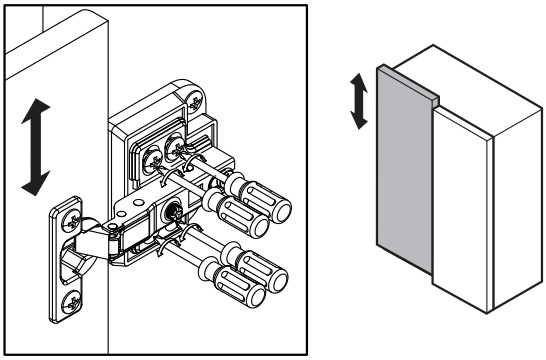

To adjust the vertical height.

Loosen the four screws “A” on both hinges. Two of them are usually in slotted holes which allows you to adjust up or down by few mm. Then tighten back up.

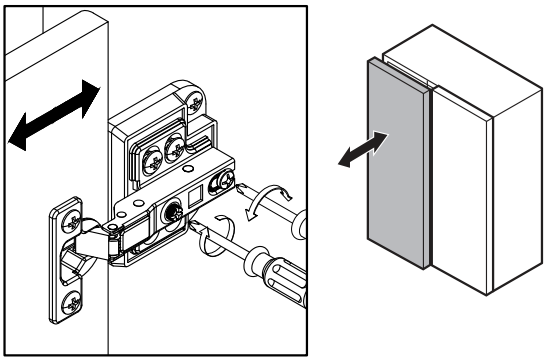

To adjust depth.

Loosen screw “B” and adjust door, if the door can not be adjusted, please loosen screw “C”, then try again. Tighten screw “B” and “C”.

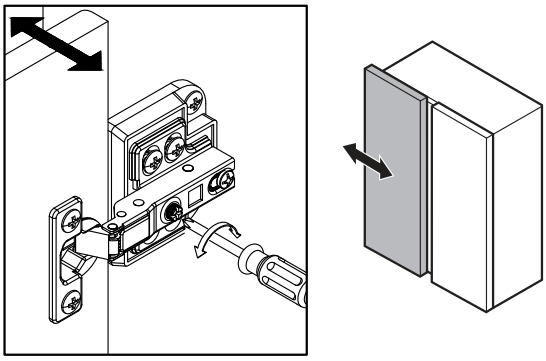

To adjust side ways.

Turn screw “C” on BOTH hinges on each door.

TIPPING RESTRAINTS KIT INSTALLATION GUIDANCE

Different wall materials require unique wall fasteners.
The wall plugs (AA2) and screws (AA3) are designed for fixing to concrete walls only.
Please consult your local hardware store to ensure you are using the correct hardware for you wall type.

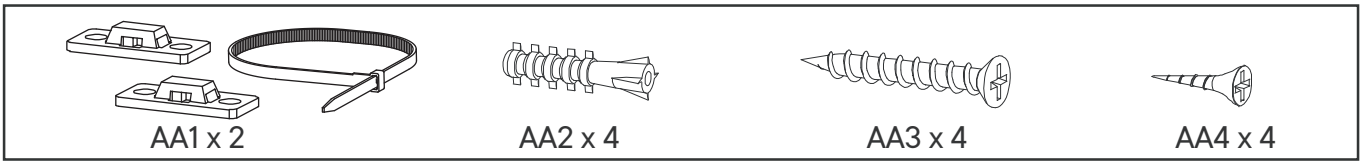

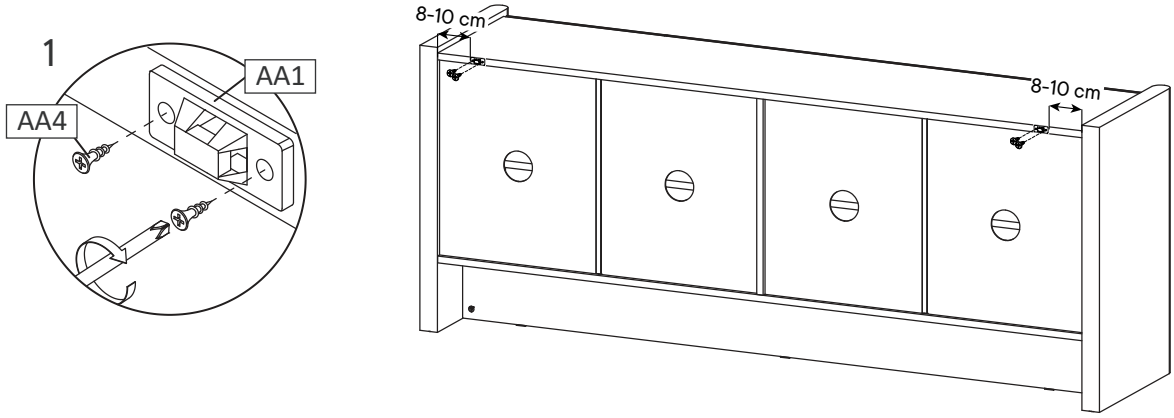

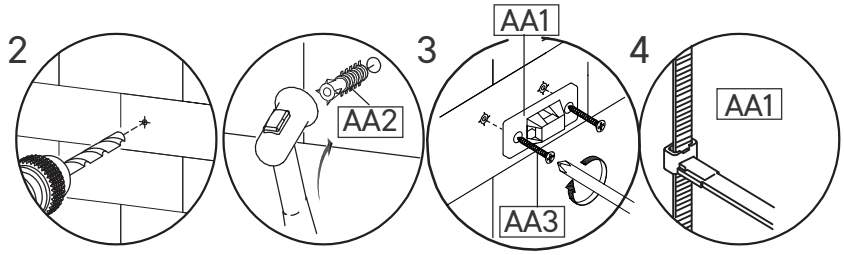

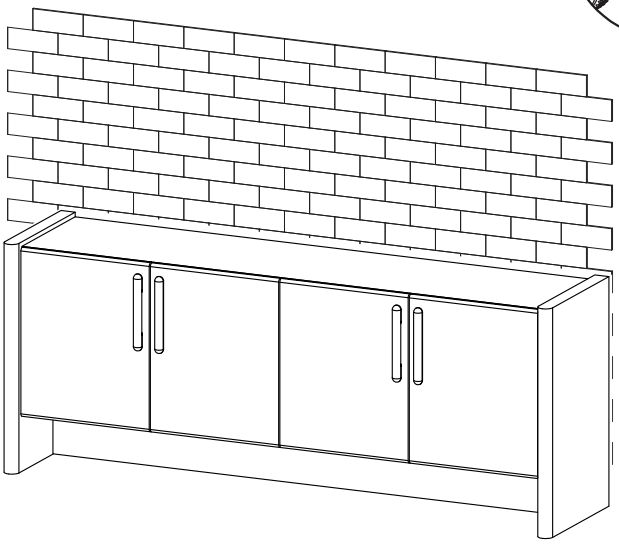

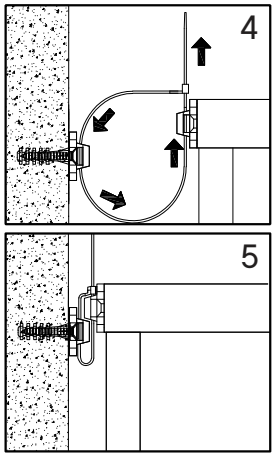

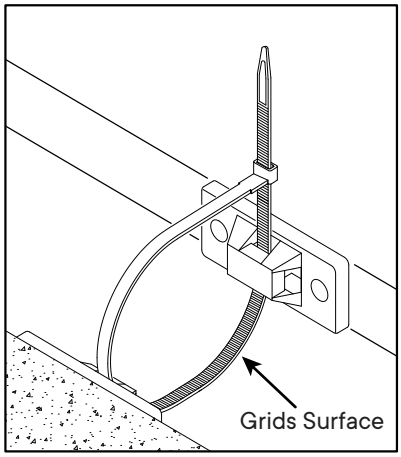

Installation Instructions :

1. Attach bracket (AA1) securely to the back top of the furniture using screw (AA4) provided. Allow 8 - 10 cm from each side.
2. Please make a hole for wall plugs position on the wall and minimum 15 mm below bracket secured to the back of unit attach the wall plugs (AA2).
3. Locate the other bracket (AA1) on the wall over wall plugs (AA2). Place furniture into position so both brackets (AA1) are vertically in the line.
4. Lace the end of the restrains strap through the larger hole in each bracket. Ensure the restrains strap with grids surface facing the inner loops. Bring both ends together and slide the flat end through the locking end and draw it through until all slack is removed.
5. Make sure that the strap is securely laced & locked.