DeerValley®

DV-1SD0220G	Ally	Shower Screen
PRODUCT MODEL	SERIES NAME	PRODUCT CATEGORY



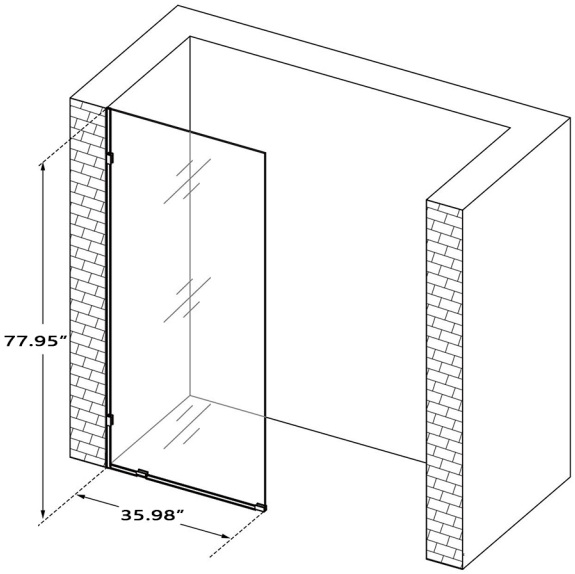

FEATURES

- 3/8" Tempered Glass Safe Shatterproof
- Waterproof Design Leak Proof
- Stainless Steel Hardware Durable Support
- Glass Clamps Secure Installation
- Frameless Design Clear Bright
- Reversible Installation Left Right
- Dry-Wet Separation Clean Dry
- Shower Space Free Comfort
- Three Colors Available

INSTALLATION

- Wall Mounted

SPECIFICATIONS

- Product Size: 36"W x 78"H
- Weight: 100 lbs
- Product Type: Fixed Screen
- Glass Thickness: 3/8"
- Glass Certification: ANSI/SGCC
- Door Installation Type: Wall Mounted
- Installation Method: Drilling holes against the wall and ground
- Color: Gold

ACCESSORIES LIST

- DV-SD0220LY140G: Long Waterproof Seal Strip
- DV-SD0220LY141G: Short Waterproof Seal Strip
- DV-SD0220GLY142G: Fixing Clip

COLOR

Gold

service@deervalleybath.com
(312) 626-9466

1-Year Limited Warranty