Catalena

S88601



DESCRIPTION

Graceful simplicity defines Catalena, a design that feels both elegant and substantial. Gently curved arms sweep upward, unified by a circular bottom band and crowned with a hand-cut crystal bobeche. Crisp white shades softly diffuse the light from concealed candelabra bulbs. Catalena harmonizes sculptural balance with quiet sophistication.

AVAILABLE TRIM



Radiance® Crystal (R)

AVAILABLE FINISHES



Heirloom Gold (-22)



Heirloom Silver (-44)



Antique Silver (-48)



Ferro Black (-59)



Textured Bronze (-73)



Heirloom Bronze (-76)



White Gold (-711)

LINE DRAWING

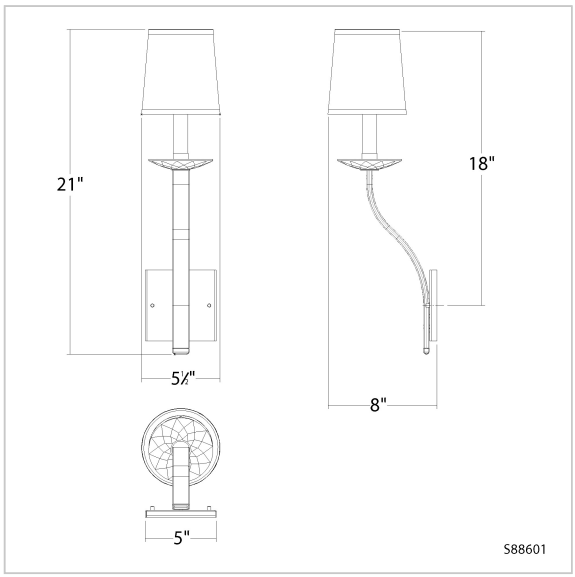

SPECIFICATIONS

Light Source	Incandescent
Standards	UL/cUL

Model	Finish	Crystal	# of Lights	Voltage	Height	Width	Length	Weight
S88601	- 22 - 44 - 48 - 59 - 73 - 76 - 711	R	1 Light	120V	21"	6"	8"	3lbs

Example: S88601-22R

schonbek.com
Phone (800) 836.1892 | Fax: (518) 563.4228

Headquarters/Eastern Distribution Center
61 Industrial Blvd, Plattsburgh, NY 12901