ASSEMBLY INSTRUCTION
This installation manual is the correct version

Note: Distinguishing between the numbers 6 and 9 is different, with the number 9 underlined; Please tighten all screws by 60% first, and then tighten them by 100% after installation is complete.

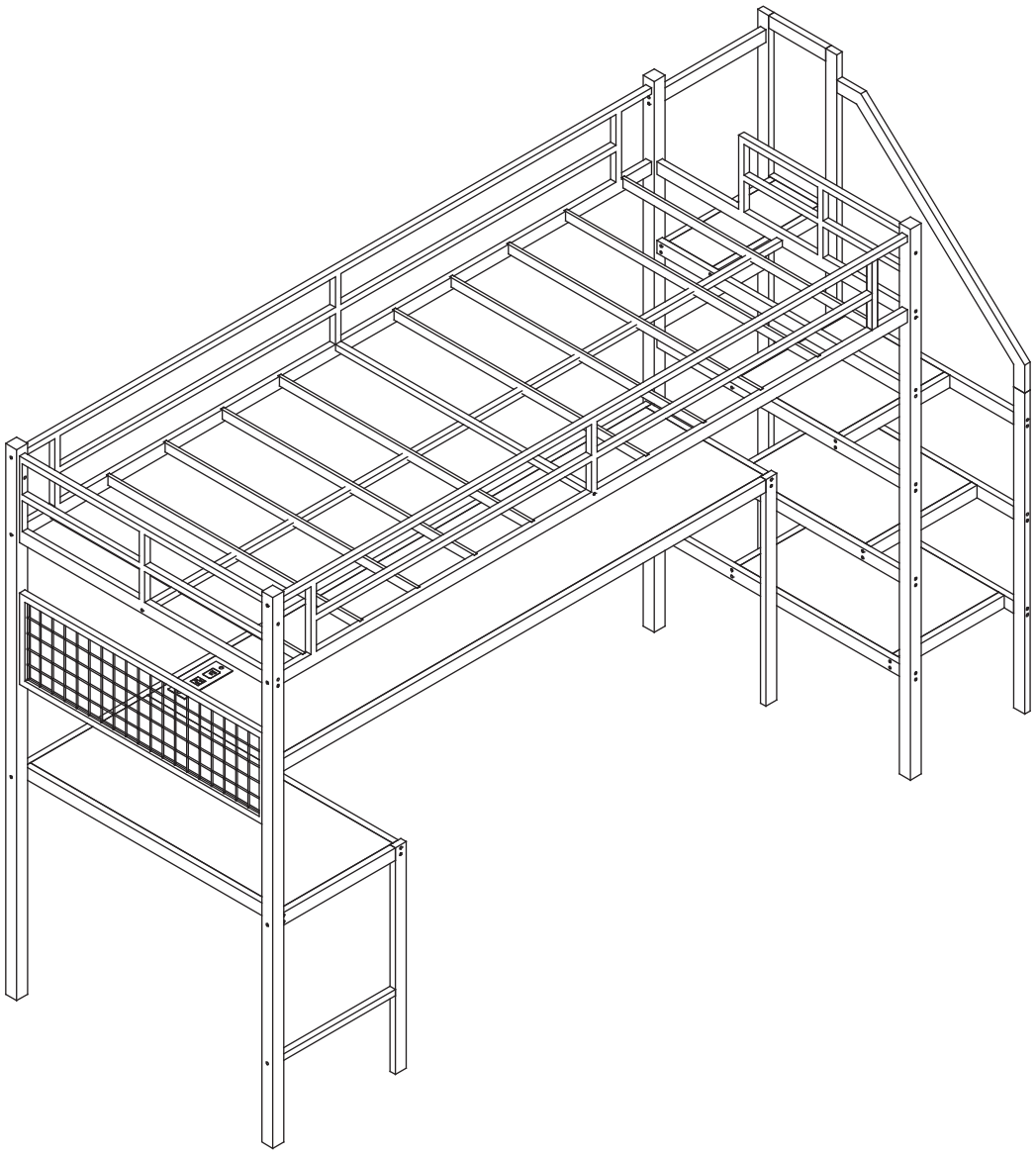

1.x1 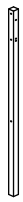	2.x1 	3.x1 	4.x1 	5.x1 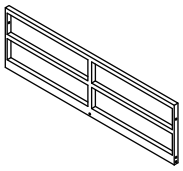
6.x1 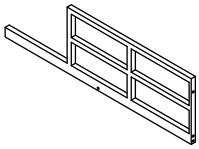	7.x2 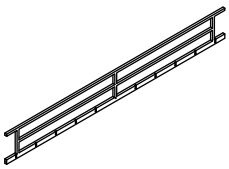	8.x1 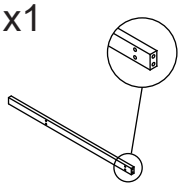	9.x1 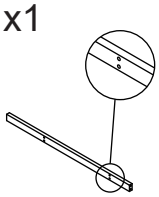	10.x1 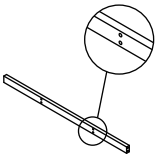
11.x1 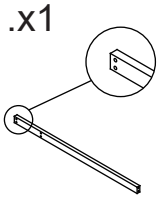	12.x1 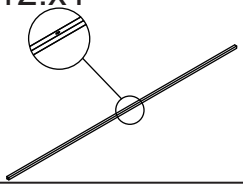	13.x1 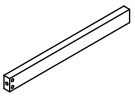	14.x1 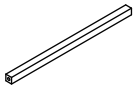	15.x2 
16.x1 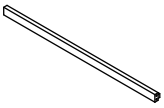	17.x1 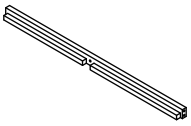	18.x1 	19.x1 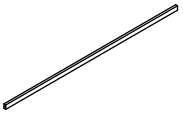	20.x1 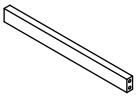
21.x1 	22.x1 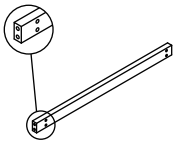	23.x1 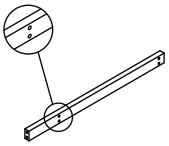	24.x1 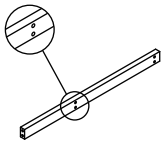	25.x1 
26.x1 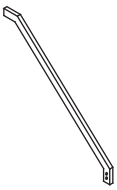	27.x3 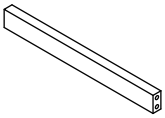	28.x8 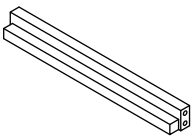	29.x1 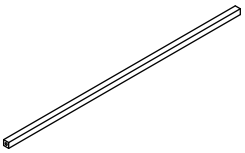	30.x10 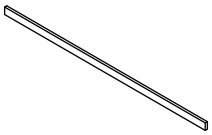
31.x1 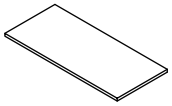	32.x1 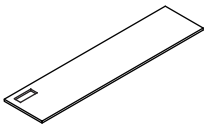	33.x1 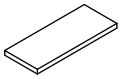	34.x1 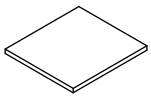	35.x1 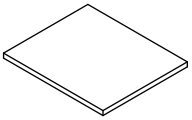
36.x1 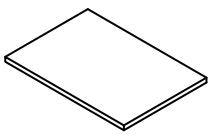	37.x1 	38.x1 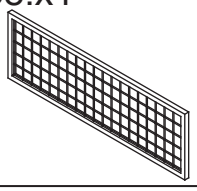	39.x1 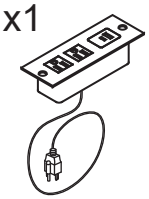	40.x1 
41.x1	42.x1	43.x1		

A.x8pcs 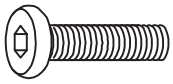 M8x55mm	B.x54pcs  M6x55mm	C.x56pcs 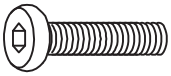 M6x35mm	D.x9pcs  M6x60mm	E.x1pcs 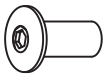 M6
Fx4pcs 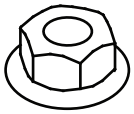 M8	G.x3pcs 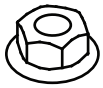 M6	H.x122pcs 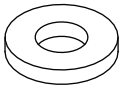 M6x16mm	I.x10pcs 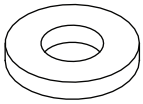 M8x16mm	J.x1pcs  M6
K.x1pcs  M8	L.x1pcs  5#	M.x8pcs 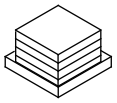 40x40mm	N.x9pcs 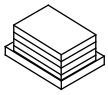 20x40mm	O.x20pcs 
P.x2pcs 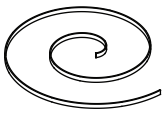	Q.x2pcs 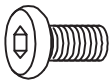 M8x16mm	R.x2pcs 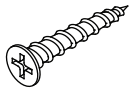 M4x10mm	S.x1pcs 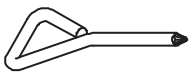	T.x3pcs 
U.x1pcs  4#				

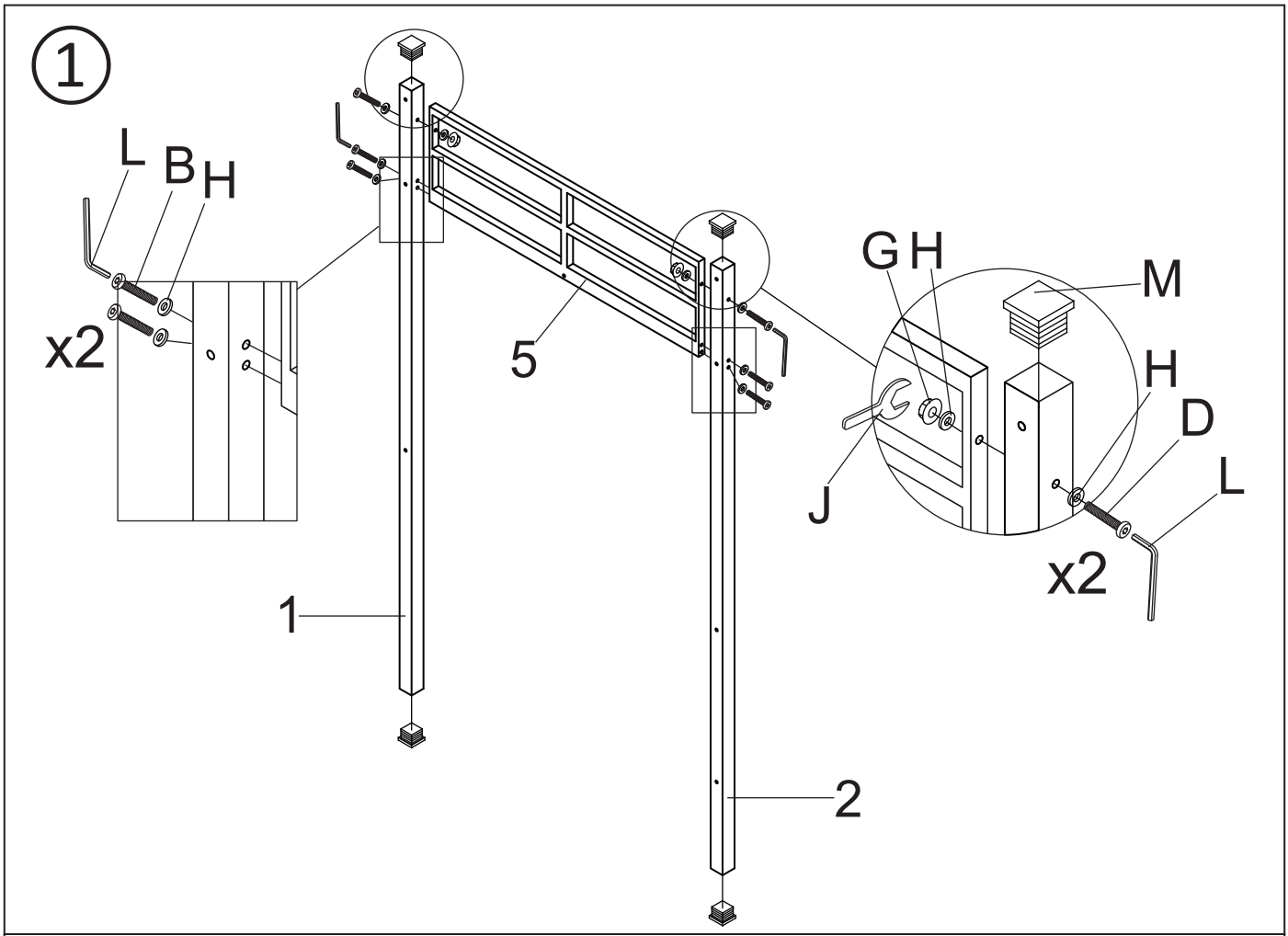
1
L
B
H
x2
5
G
H
M
H
D
L
J
x2
1
2

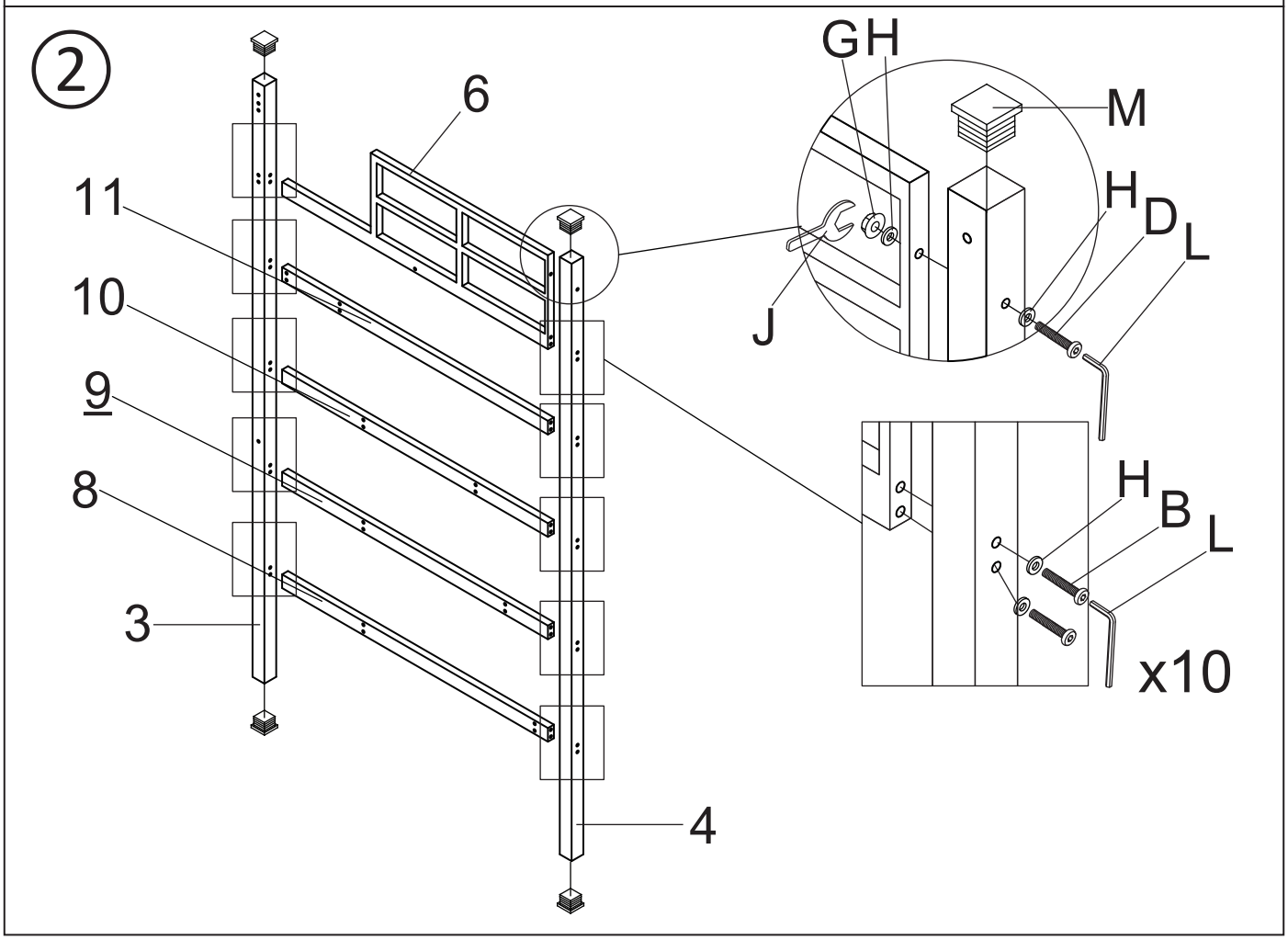
2
6
11
10
9
8
3
G
H
M
H
D
L
J
H
B
L
x10
4

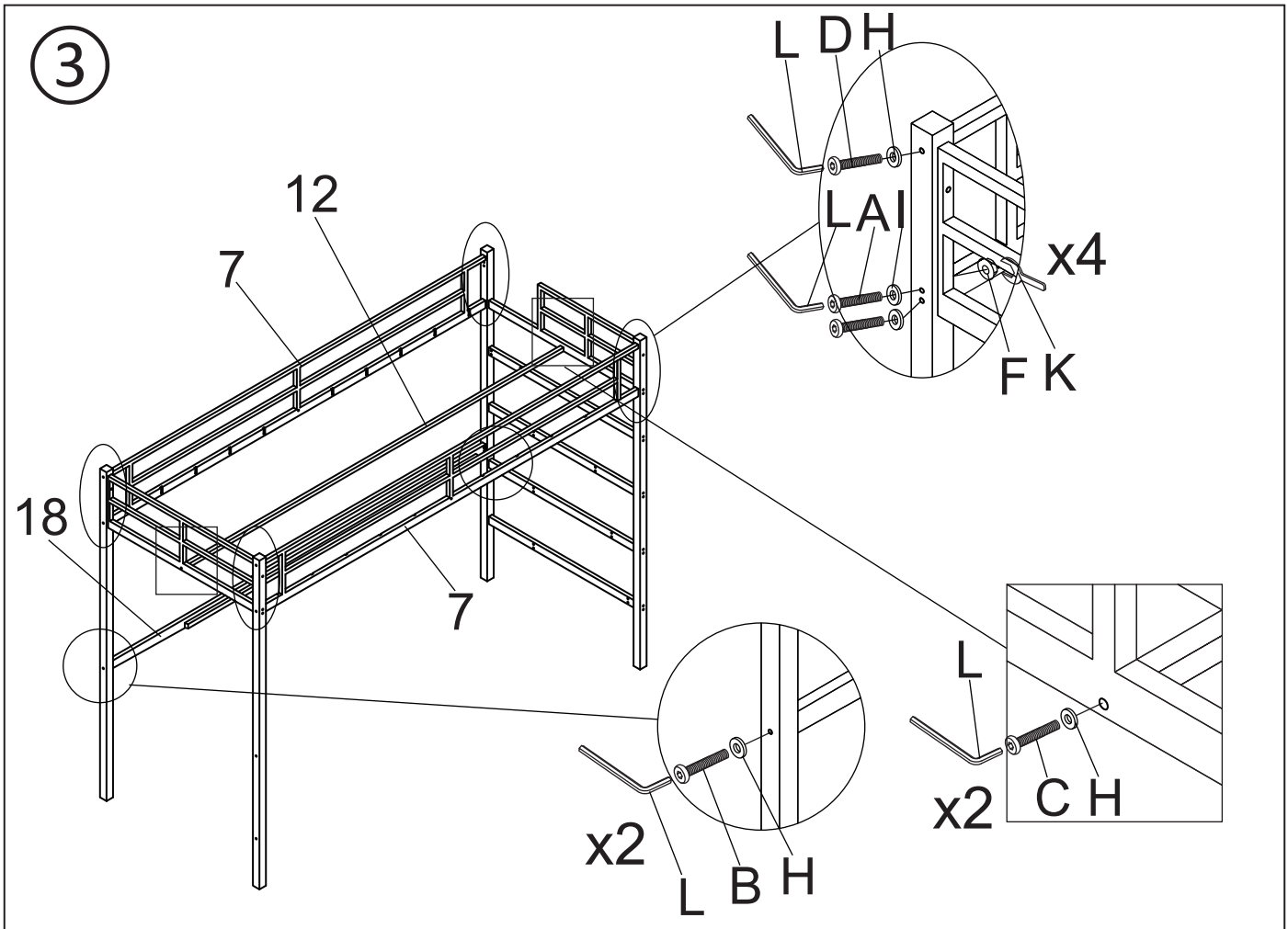
3
L D H
L A I
x4
F K
12
7
18
7
L
x2
C H
x2
L B H

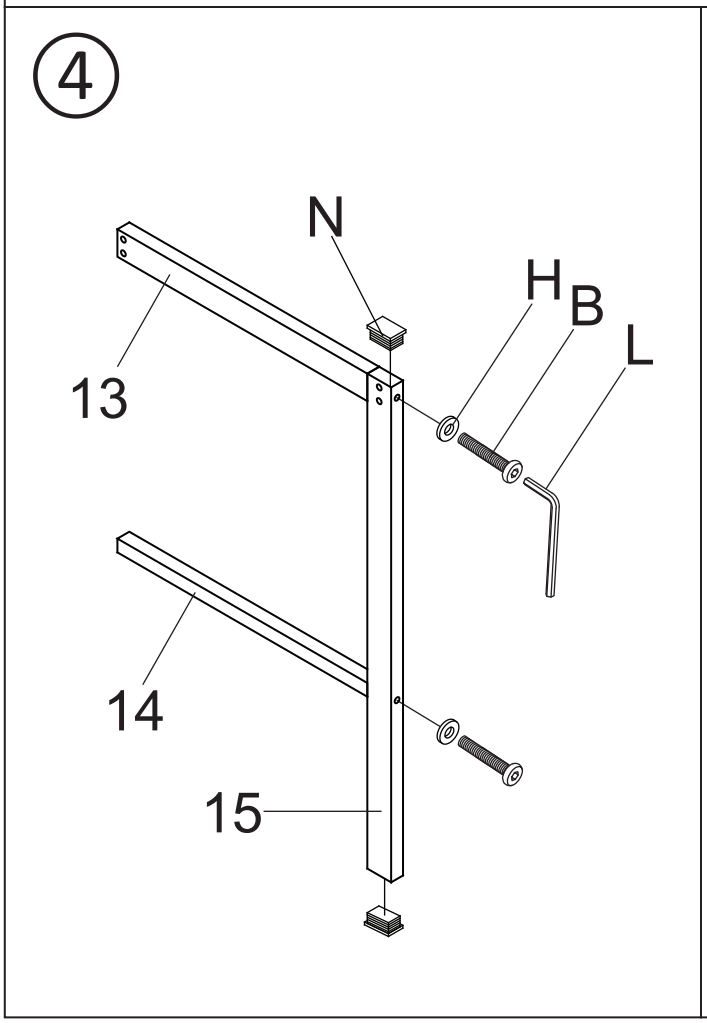
4
N
H B
L
13
14
15

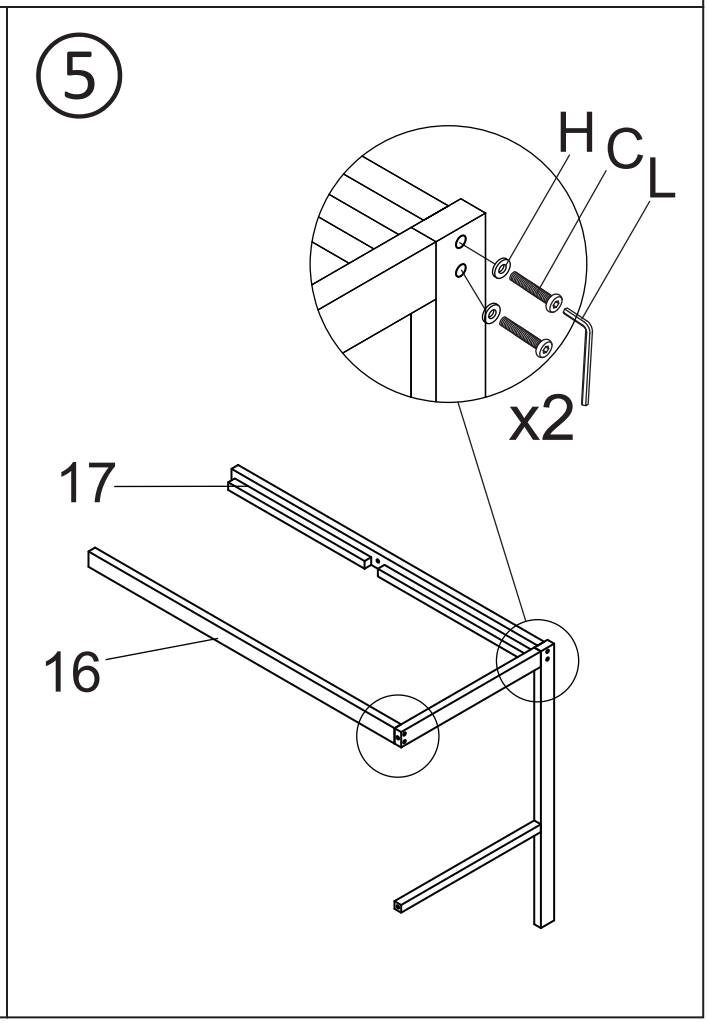
5
H C L
x2
17
16

6

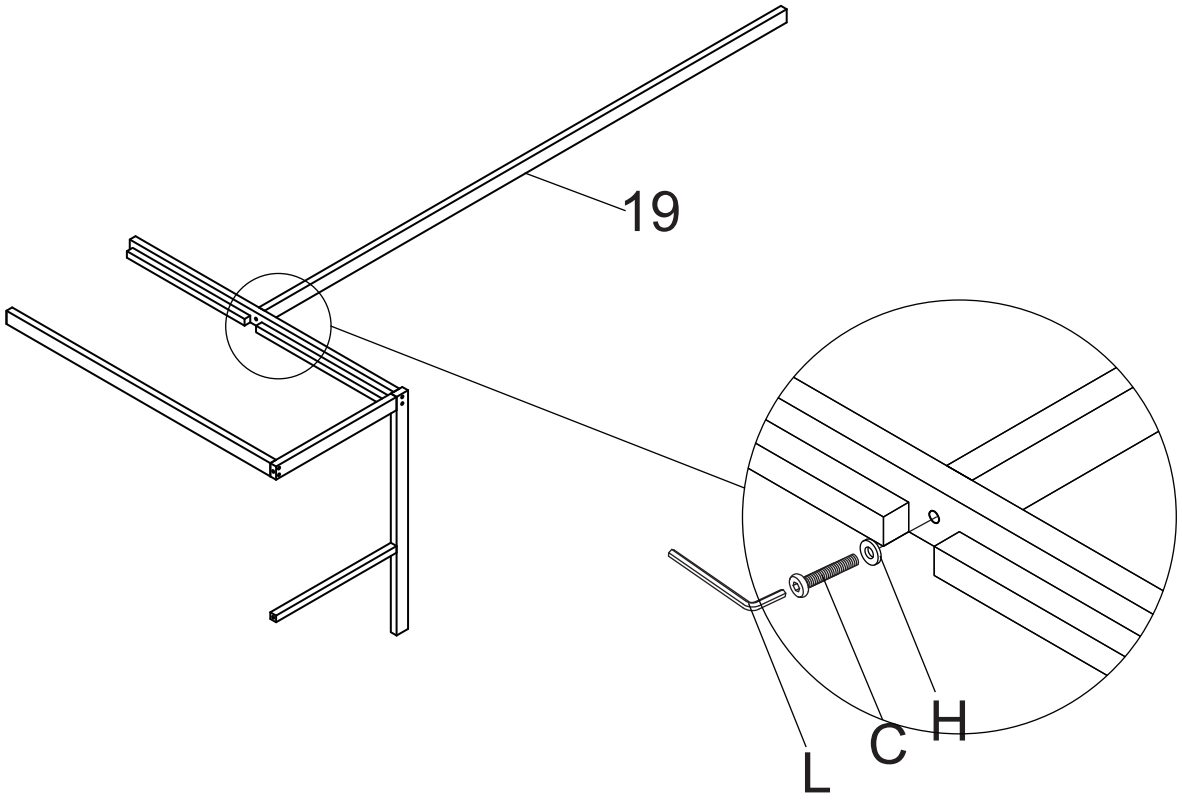

7

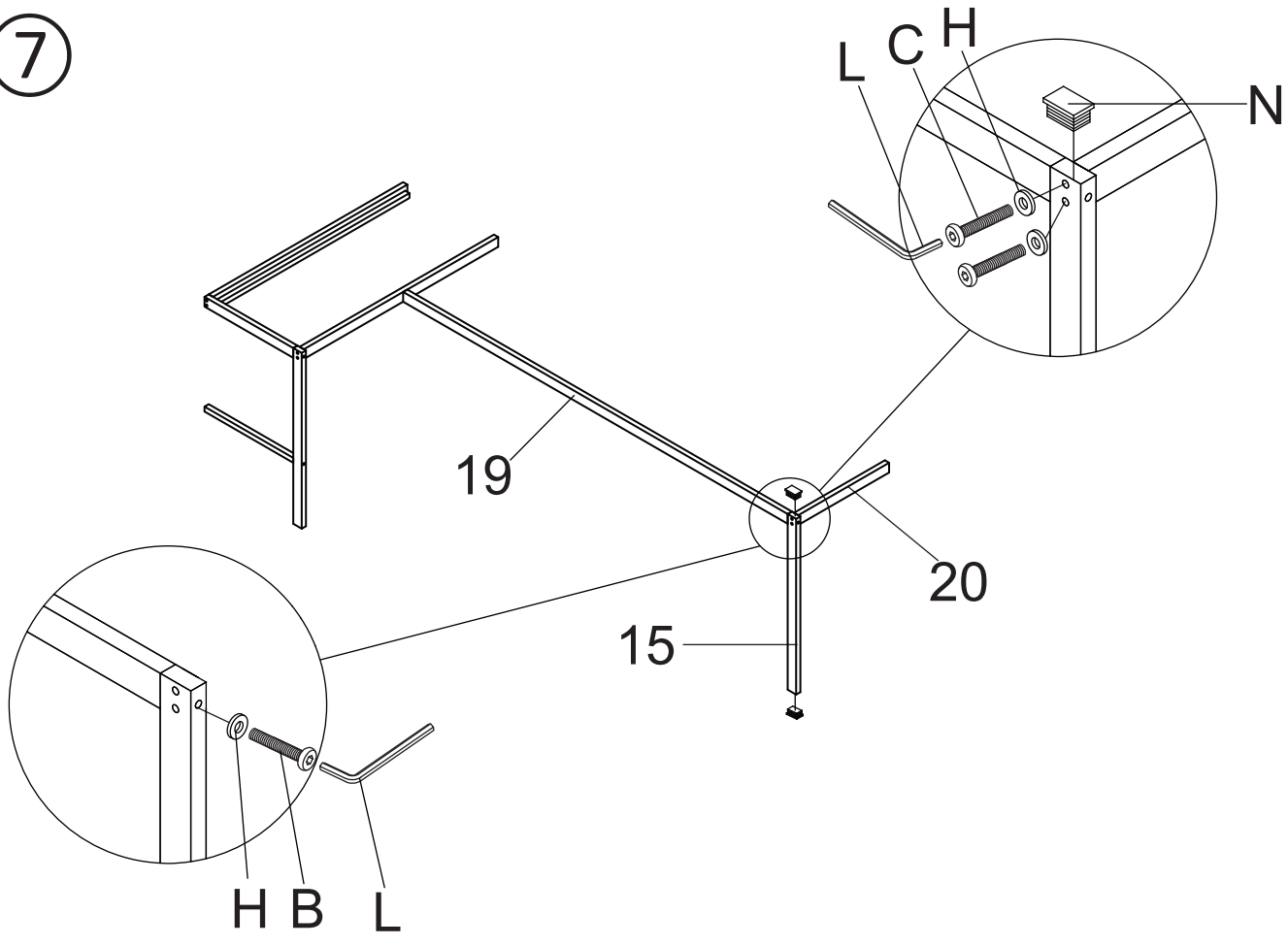

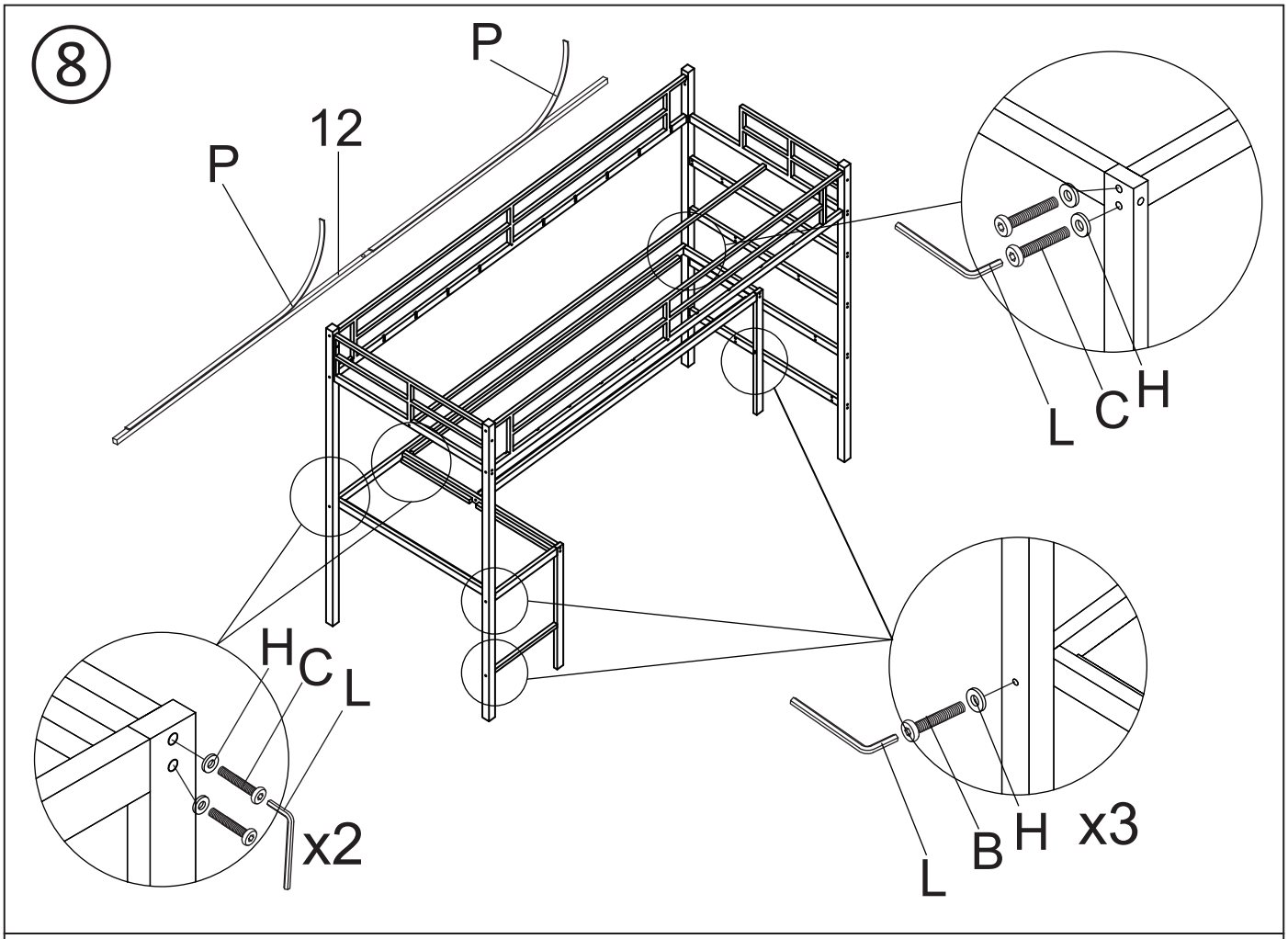
8
P
12
P
L
C
H
H
C
L
x2
L
B
H
x3

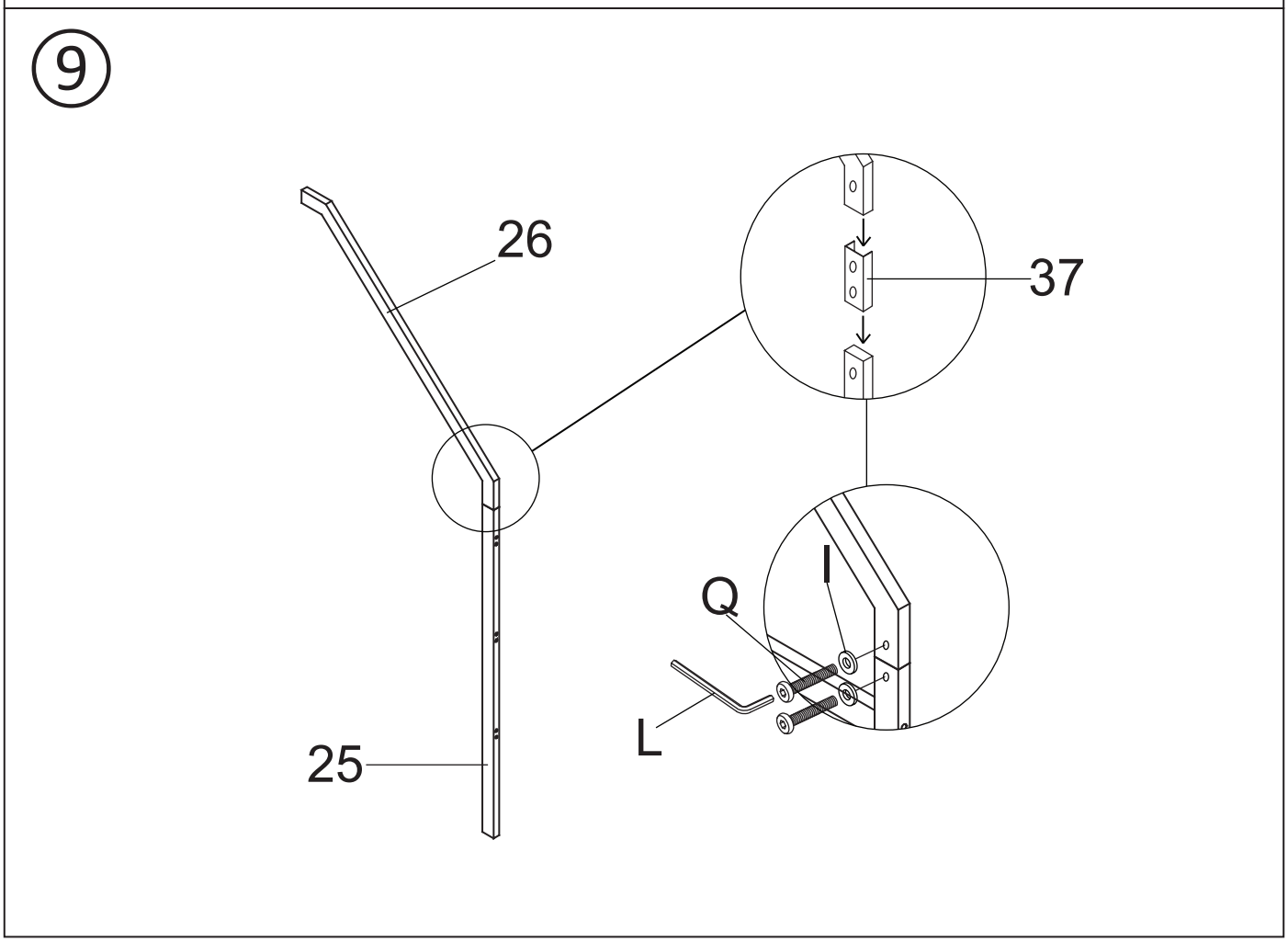
9
26
37
I
Q
L
25

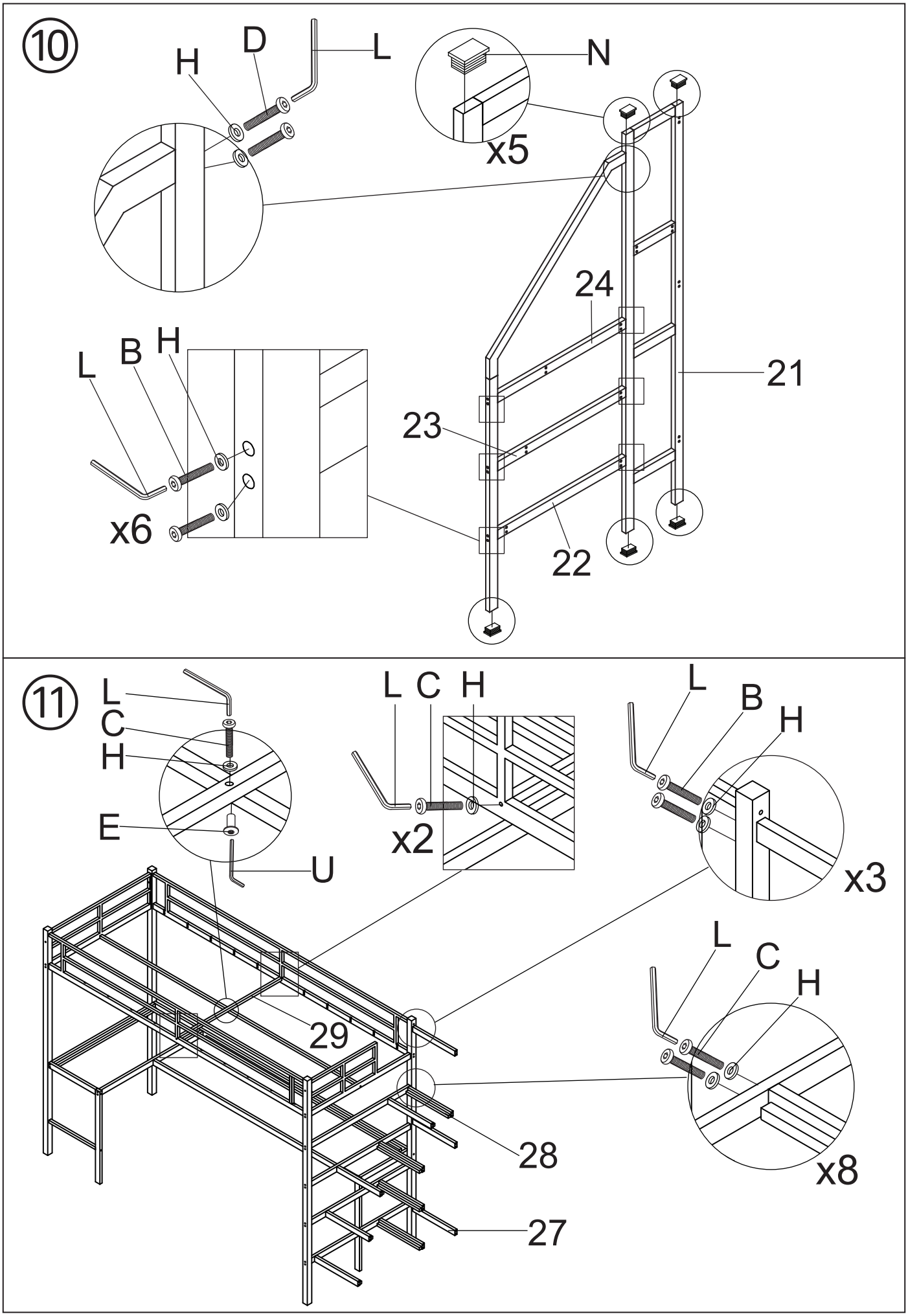
10
H
D
L
N
x5
24
21
L
B
H
x6
23
22
11
L
C
H
E
U
L C H
x2
L
B
H
x3
L
C
H
x8
29
28
27

⑫

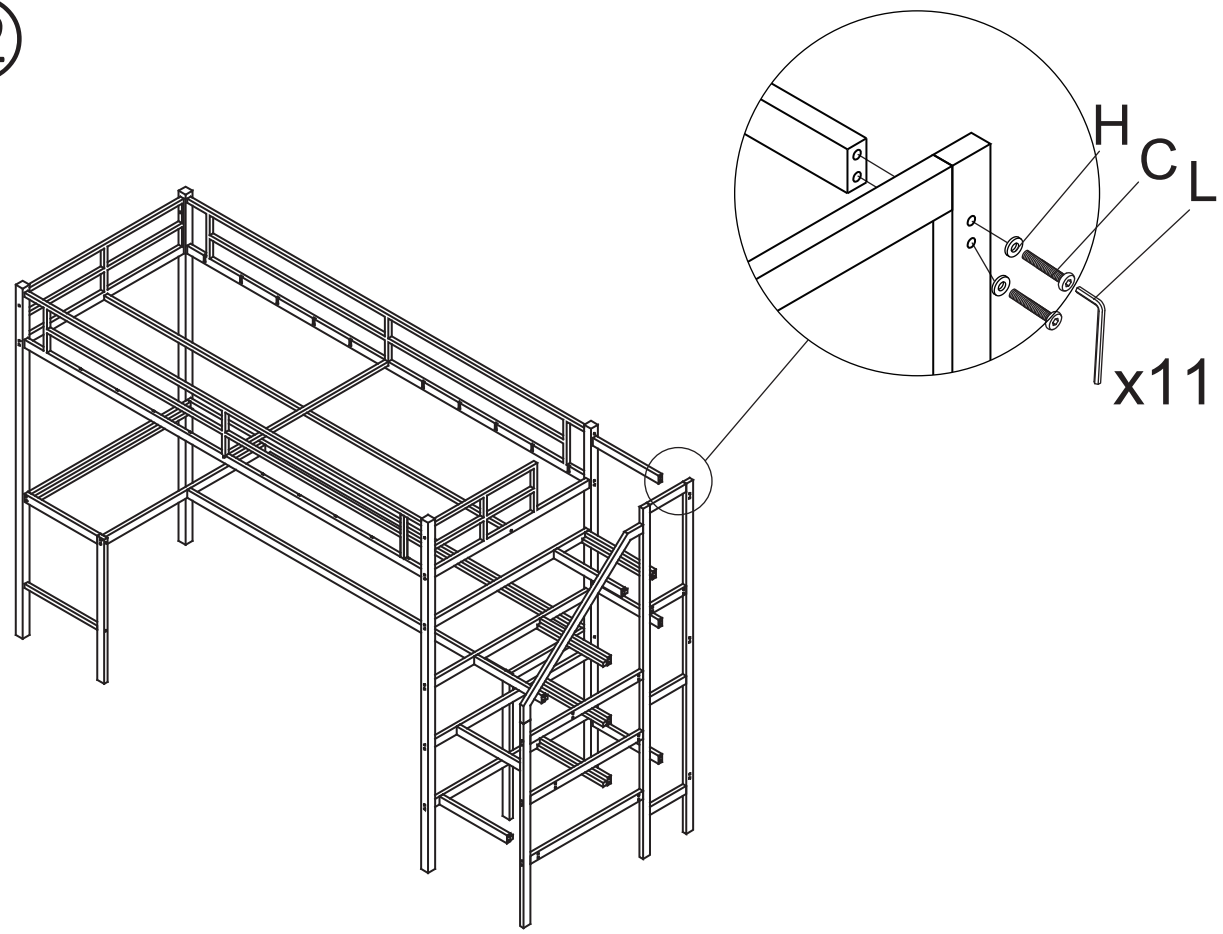

⑬

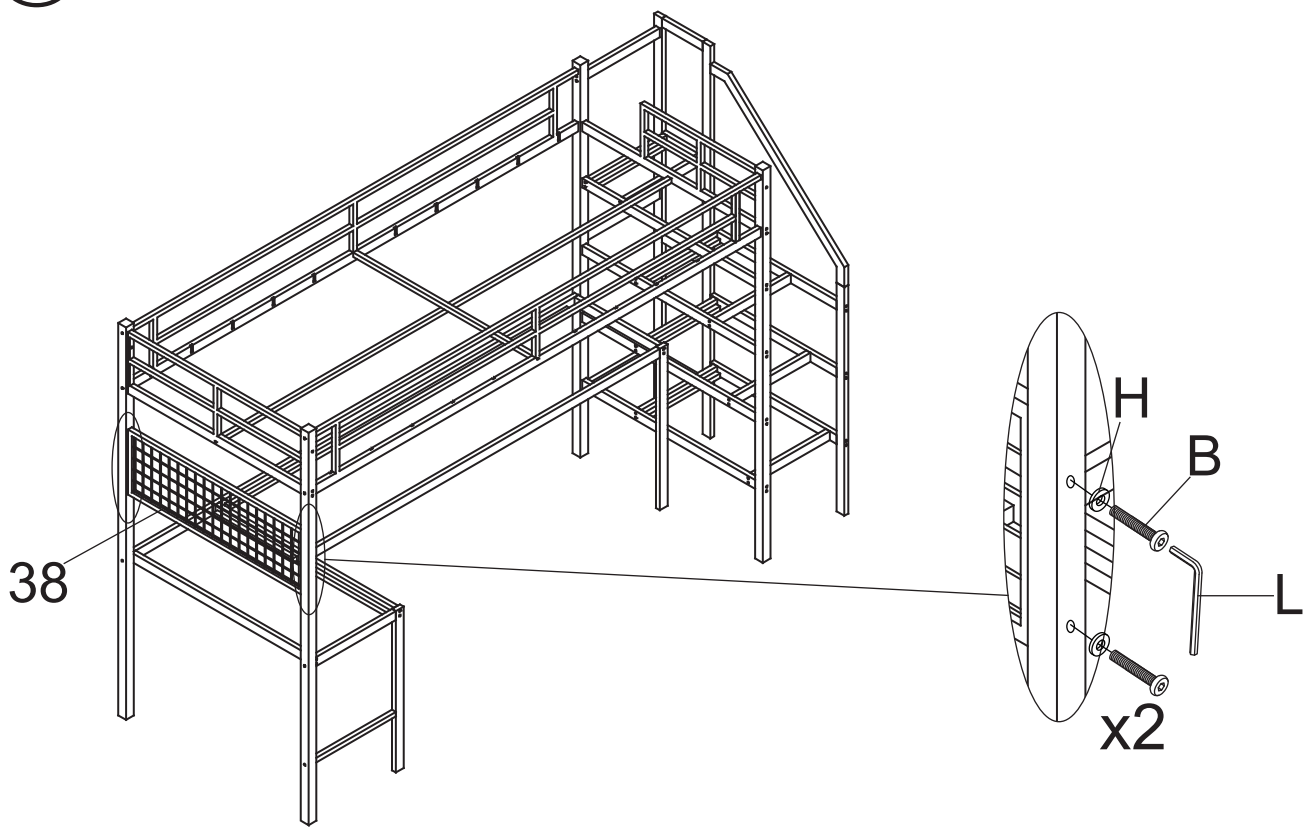

⑭

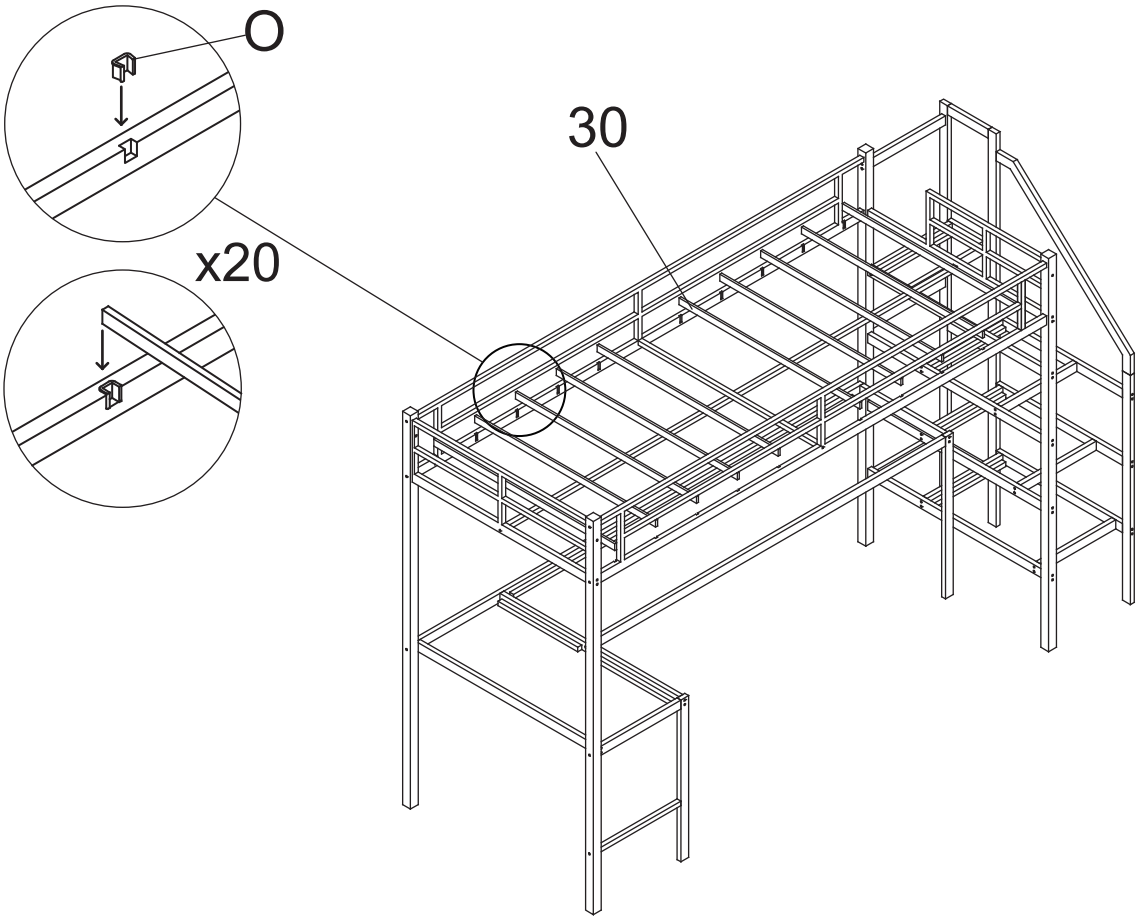

⑮

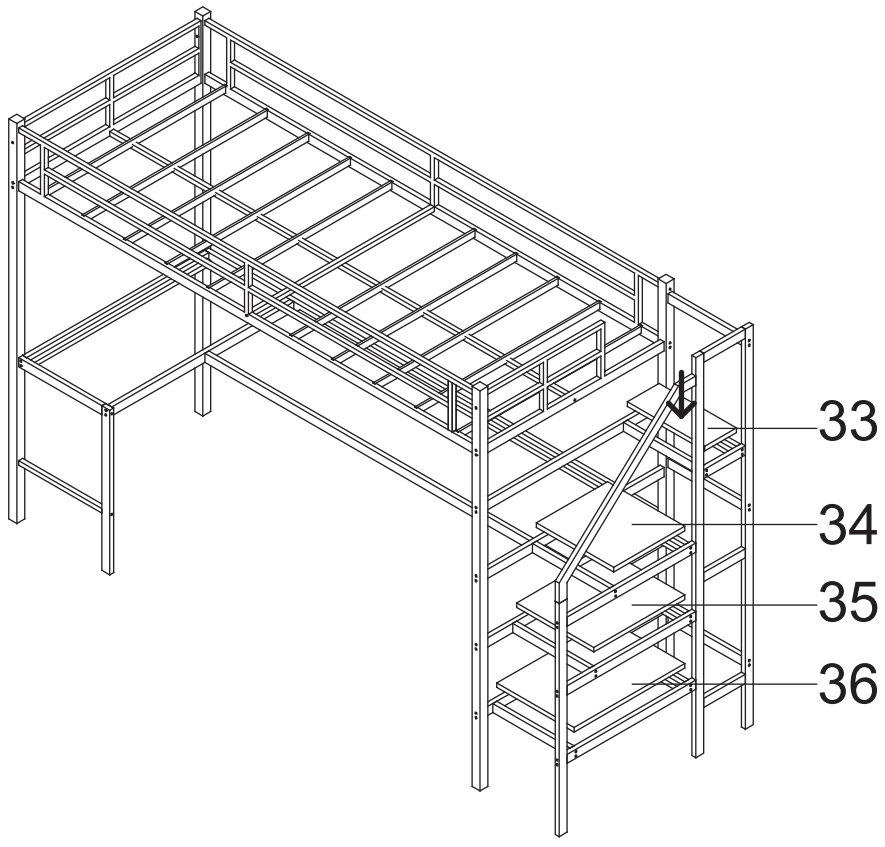

⑯

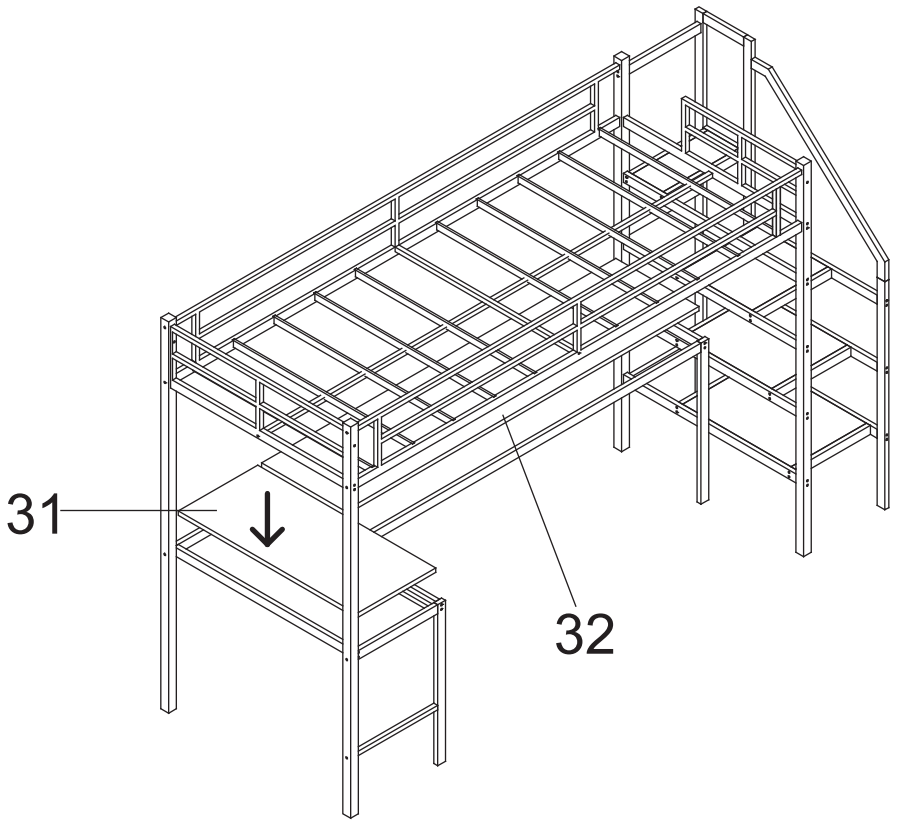

⑰

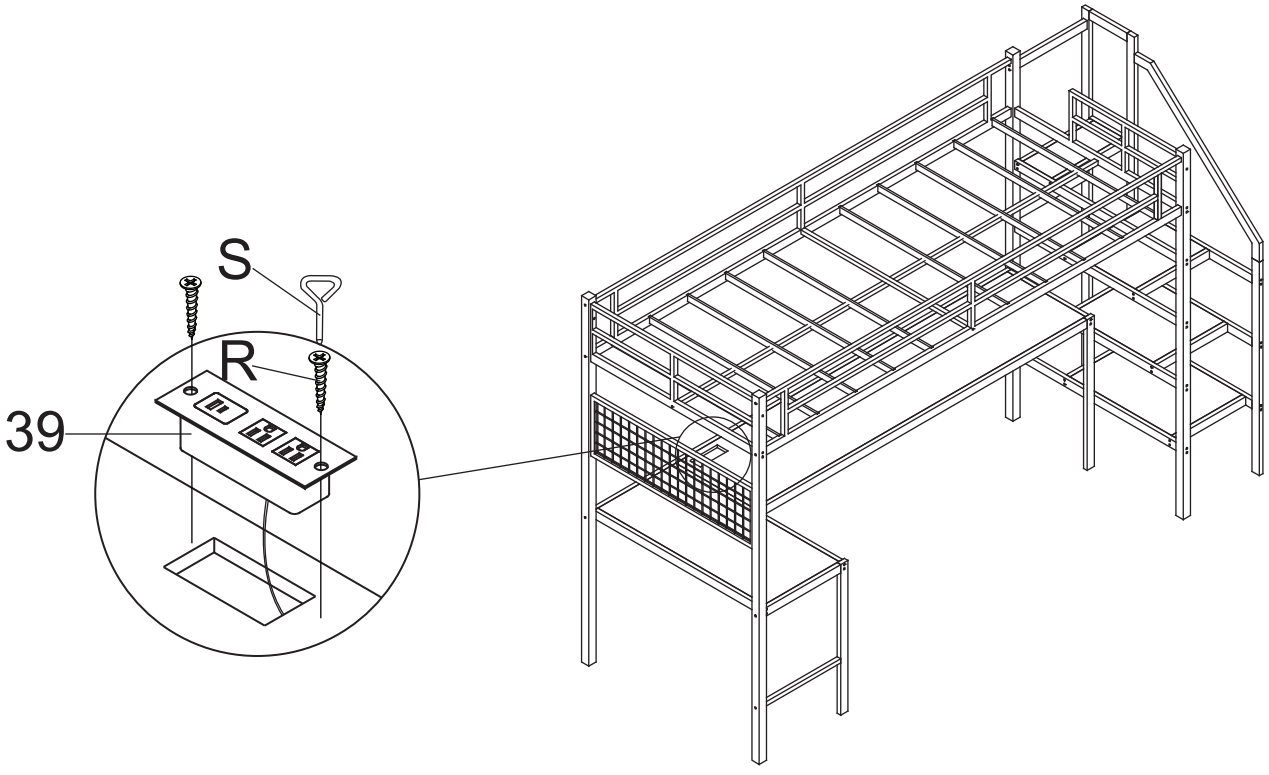

⑱

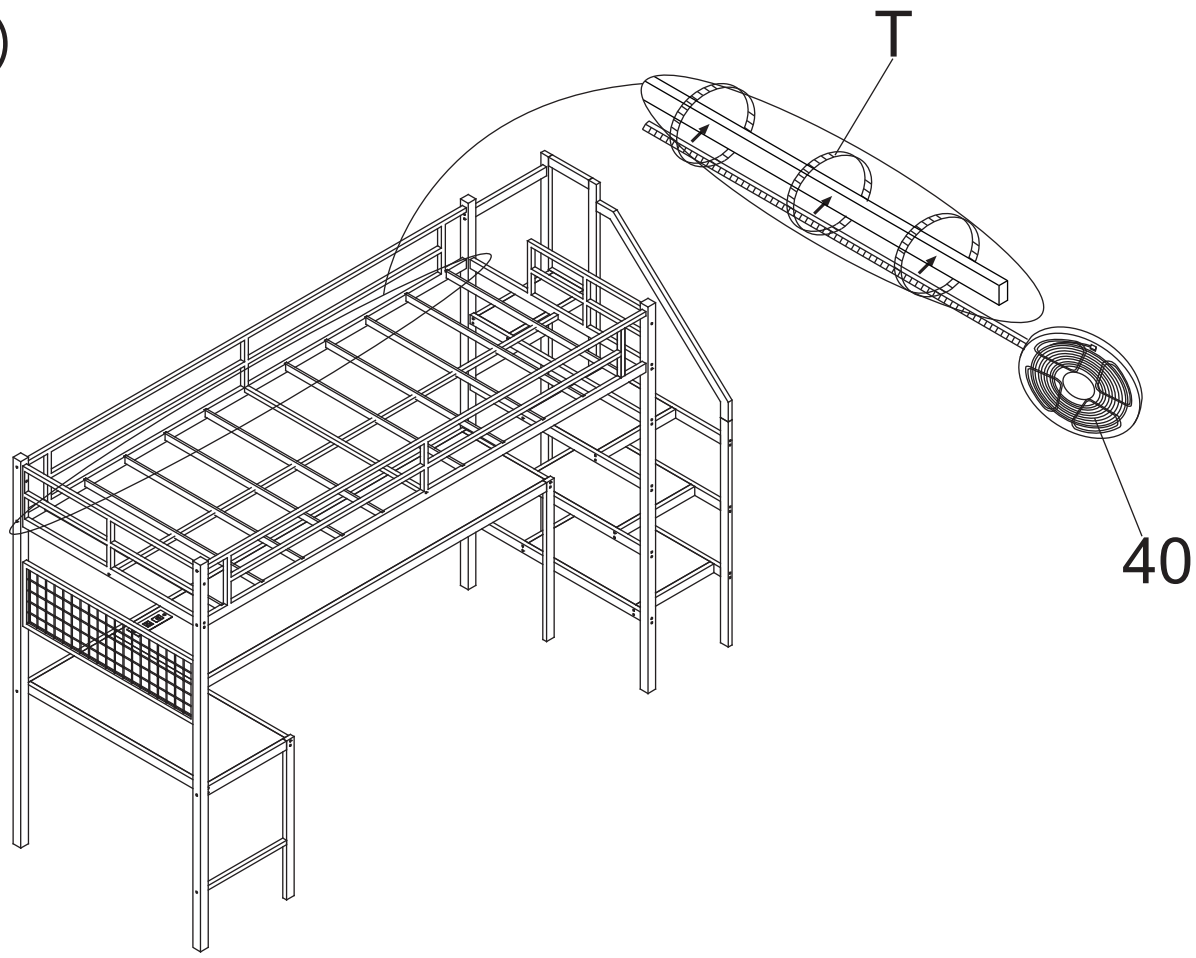

⑲

